BS ISO 6358-2:2019

BSI Standards Publication

Pneumatic fluid power — Determination of flow-rate characteristics of components using compressible fluids

Part 2: Alternative test methods

Documents
Document Sharing Hub

Full document details: BS ISO 6358-2:2019

National foreword

This British Standard is the UK implementation of ISO 6358-2:2019. It supersedes BS ISO 6358-2:2013, which is withdrawn.

The UK participation in its preparation was entrusted to Technical Committee MCE/18/-/5, Control components.

A list of organizations represented on this committee can be obtained on request to its secretary.

This publication does not purport to include all the necessary provisions of a contract. Users are responsible for its correct application.

© The British Standards Institution 2019
Published by BSI Standards Limited 2019

ISBN 978 0 539 00327 7

ICS 23.100.01

Compliance with a British Standard cannot confer immunity from legal obligations.

This British Standard was published under the authority of the Standards Policy and Strategy Committee on 30 September 2019.

Amendments/corrigenda issued since publication

Date	Text affected

Documents
Document Sharing Hub

Full document details: BS ISO 6358-2:2019

INTERNATIONAL STANDARD

ISO 6358-2

Second edition
2019-08

Pneumatic fluid power — Determination of flow-rate characteristics of components using compressible fluids —

Part 2: Alternative test methods

Transmissions pneumatiques — Détermination des caractéristiques de débit des composants traversés par un fluide compressible —

Partie 2: Méthodes d'essai alternatives

Reference number
ISO 6358-2:2019(E)

Documents
Document Sharing Hub

© ISO 2019

Full document details: BS ISO 6358-2:2019

COPYRIGHT PROTECTED DOCUMENT

© ISO 2019

All rights reserved. Unless otherwise specified, or required in the context of its implementation, no part of this publication may be reproduced or utilized otherwise in any form or by any means, electronic or mechanical, including photocopying, or posting on the internet or an intranet, without prior written permission. Permission can be requested from either ISO at the address below or ISO's member body in the country of the requester.

ISO copyright office
CP 401 • Ch. de Blandonnet 8
CH-1214 Vernier, Geneva
Phone: +41 22 749 01 11
Fax: +41 22 749 09 47
Email: copyright@iso.org
Website: www.iso.org

Published in Switzerland

© ISO 2019 – All rights reserved

Documents
Document Sharing Hub

Full document details: BS ISO 6358-2:2019

Contents

Page

Foreword ... **iv**

Introduction ... **v**

1 Scope ... **1**

2 Normative references ... **2**

3 Terms and definitions ... **2**

4 Symbols and units ... **2**

5 Test installation ... **3**
- 5.1 Test circuit for discharge test ... 3
- 5.2 Test circuit for charge test ... 3
- 5.3 General requirements ... 4
- 5.4 Requirements for the tank (item 4) ... 5
  - 5.4.1 Structure ... 5
  - 5.4.2 Stuffed material ... 6
  - 5.4.3 Volume ... 6
- 5.5 Special requirements ... 7

6 Test procedures ... **7**
- 6.1 Test conditions ... 7
  - 6.1.1 Test fluid ... 7
  - 6.1.2 Checks ... 7
  - 6.1.3 Test measurements ... 8
- 6.2 Measuring procedures ... 8
  - 6.2.1 Requirements for testing to publish catalogue ratings ... 8
  - 6.2.2 Selection of measuring procedure ... 8
  - 6.2.3 Measuring procedures for discharge test ... 8
  - 6.2.4 Measuring procedures for charge test (see Figure 2) ... 9
- 6.3 Calculation of characteristics ... 10
  - 6.3.1 Sonic conductance, C ... 10
  - 6.3.2 Critical back-pressure ratio, b, and subsonic index, m ... 13
  - 6.3.3 Pressure dependence coefficient, K_p ... 13

7 Presentation of test results ... **14**

8 Identification statement (reference to this document) ... **15**

Annex A (informative) **Evaluation of measurement uncertainty** ... **16**

Annex B (normative) **Test method to determine and calibrate the volume of an isothermal tank** ... **22**

Annex C (informative) **Isothermal tank stuffing** ... **28**

Annex D (informative) **Test method to determine isothermal performance** ... **30**

Annex E (informative) **Formulae for calculation of flow-rate characteristics** ... **33**

Annex F (informative) **Procedures for calculating critical back-pressure ratio, b, and subsonic index, m, by the least-square method using the Solver function in Microsoft Excel®** ... **36**

Bibliography ... **40**

© ISO 2019 – All rights reserved

Documents
Document Sharing Hub

Full document details: BS ISO 6358-2:2019

Foreword

ISO (the International Organization for Standardization) is a worldwide federation of national standards bodies (ISO member bodies). The work of preparing International Standards is normally carried out through ISO technical committees. Each member body interested in a subject for which a technical committee has been established has the right to be represented on that committee. International organizations, governmental and non-governmental, in liaison with ISO, also take part in the work. ISO collaborates closely with the International Electrotechnical Commission (IEC) on all matters of electrotechnical standardization.

The procedures used to develop this document and those intended for its further maintenance are described in the ISO/IEC Directives, Part 1. In particular, the different approval criteria needed for the different types of ISO documents should be noted. This document was drafted in accordance with the editorial rules of the ISO/IEC Directives, Part 2 (see www.iso.org/directives).

Attention is drawn to the possibility that some of the elements of this document may be the subject of patent rights. ISO shall not be held responsible for identifying any or all such patent rights. Details of any patent rights identified during the development of the document will be in the Introduction and/or on the ISO list of patent declarations received (see www.iso.org/patents).

Any trade name used in this document is information given for the convenience of users and does not constitute an endorsement.

For an explanation of the voluntary nature of standards, the meaning of ISO specific terms and expressions related to conformity assessment, as well as information about ISO's adherence to the World Trade Organization (WTO) principles in the Technical Barriers to Trade (TBT) see www.iso.org/iso/foreword.html.

This document was prepared by Technical Committee ISO/TC 131, *Fluid power systems*, Subcommittee SC 5, *Control products and components*.

This second edition cancels and replaces the first edition (ISO 6358-2:2013), which has been technically revised.

A list of all parts in the ISO 6358 series can be found on the ISO website.

Any feedback or questions on this document should be directed to the user's national standards body. A complete listing of these bodies can be found at www.iso.org/members.html.

© ISO 2019 – All rights reserved
Documents
Document Sharing Hub
Full document details: BS ISO 6358-2:2019

Introduction

In pneumatic fluid power systems, power is transmitted and controlled through a gas under pressure within a circuit. Components that make up such a circuit are inherently resistive to the flow of the gas and it is necessary, therefore, to define and determine the flow-rate characteristics that describe their performance.

ISO 6358:1989[1)] was developed to determine the flow-rate characteristics of pneumatic valves, based upon a model of converging nozzles. The method included two characteristic parameters: sonic conductance, C, and critical pressure ratio, b, used in a proposed mathematical approximation of the flow behaviour. The result described flow performance of a pneumatic valve from choked flow to subsonic flow, based on static pressure. This new edition uses stagnation pressure instead, to take into account the influence of flow velocity on the measurement of pressures.

Experience has demonstrated that many pneumatic valves have converging–diverging characteristics that do not fit the ISO 6358:1989 model very well. Furthermore, new developments have allowed the application of this method to additional components beyond pneumatic valves. However, this now requires the use of four parameters (C, b, m, and Δp_c) to define the flow performance in both the choked and subsonic flow regions.

This document describes a set of three flow-rate characteristic parameters determined from test results. These parameters are described as follows and are listed in decreasing order of priority:

— The sonic conductance, C, corresponding to the maximum flow rate (choked) is the most important parameter. This parameter is defined by the upstream stagnation conditions.

— The critical back-pressure ratio, b, representing the boundary between choked and subsonic flow is second in importance. Its definition differs here from the one in ISO 6358:1989 because it corresponds to the ratio of downstream to upstream stagnation pressures.

— The subsonic index, m, is used if necessary to represent more accurately the subsonic flow behaviour. For components with a fixed flow path, m is distributed around 0,5. In these cases, only the first two characteristic parameters C and b are necessary. For many other components, m will vary widely. In these cases, it is necessary to determine C, b, and m.

Several changes to the test equipment were made to overcome apparent violations of the theory of compressible fluid flow. This included expanded inlet pressure-measuring tubes to satisfy the assumptions of negligible inlet velocity to the item under test and to allow the inlet stagnation pressure to be measured directly. Expanded outlet tubes allow the direct measurement of downstream stagnation pressure to better accommodate the different component models. The difference between stagnation pressure at upstream and downstream of component means a loss of pressure energy.

ISO 6358-3 can be used to calculate without measurements an estimate of the overall flow-rate characteristics of an assembly of components and piping, using the characteristics of each component and piping determined in accordance with this document or ISO 6358-1.

The discharge and charge test methods specified in this document have the following advantages over the test method specified in ISO 6358-1:

a) an air source with a large flow-rate capacity is not required;

b) components with larger flow-rate capacity can be tested more easily;

c) energy consumption is minimised; and

d) test time is shortened in the discharge and charge tests, and noise level is decreased in the charge test.

1) Withdrawn standard.

© ISO 2019 – All rights reserved

Documents
Document Sharing Hub
Full document details: BS ISO 6358-2:2019

Performance characteristics measured in accordance with this edition of the ISO 6358 series will differ from those measured in accordance with ISO 6358:1989.

© ISO 2019 – All rights reserved
Documents
Document Sharing Hub
Full document details: BS ISO 6358-2:2019

Pneumatic fluid power — Determination of flow-rate characteristics of components using compressible fluids —

Part 2: Alternative test methods

1 Scope

This document specifies a discharge test and a charge test as alternative methods for testing pneumatic fluid power components that use compressible fluids, i.e. gases, and that have internal flow passages that can be either fixed or variable in size to determine their flow-rate characteristics. However, this document does not apply to components whose flow coefficient is unstable during use, i.e. components that exhibit remarkable hysteretic behaviour (because they can contain flexible parts that deform under the flow) or that have an internal feedback phenomenon (such as regulators), or components that have a cracking pressure such as non-return (check) valves and quick-exhaust valves. In addition, it does not apply to components that exchange energy with the fluid during flow-rate measurement, e.g. cylinders, accumulators.

NOTE This document does not provide a method to determine if a component has hysteretic behaviour; ISO 6358-1 does provide such a method.

Table 1 provides a summary of which parts of the ISO 6358 series can be applied to various components.

Table 1 — Application of the ISO 6358 series test methods to components

Components		Constant upstream pressure test		Variable upstream pressure test	
		ISO 6358-1 constant upstream pressure test	ISO 6358-2 charge test	ISO 6358-1 variable upstream pressure test	ISO 6358-2 discharge test
Group 1	Directional control valves	yes	yes	yes	yes
	Flow control valves	yes	yes	yes	yes
	Connectors	yes	yes	yes	yes
	Valve manifolds	yes	yes	yes	yes
	Group of components	yes	yes	yes	yes
Group 2	Filters and lubricators	yes	no	no	no
	Non-return (check) valves	yes	no	no	no
	Quick-exhaust valves	yes	no	no	no
	Tubes and hoses	yes	no	no	no
Group 3	Silencers and exhaust oil mist separators	no	no	yes	yes
	Blow nozzles	no	no	yes	yes
	Cylinder end heads	no	no	yes	yes

The charge test cannot be performed on components that do not have downstream port connections.

This document specifies requirements for the test installation, the test procedure, and the presentation of results.

© ISO 2019 – All rights reserved

Documents Document Sharing Hub
Full document details: BS ISO 6358-2:2019

Evaluation of measurement uncertainties is described in Annex A. Requirements for a method to test the volume of an isothermal tank are given in Annex B. Guidance on the isothermal tank is given in Annex C. Requirements for a method to test isothermal performance are given in Annex D. Guidance on the formula for calculating characteristics is given in Annex E. Guidance on calculating flow-rate characteristics is given in Annex F.

2 Normative references

The following documents are referred to in the text in such a way that some or all of their content constitutes requirements of this document. For dated references, only the edition cited applies. For undated references, the latest edition of the referenced document (including any amendments) applies.

ISO 1219-1, *Fluid power systems and components — Graphical symbols and circuit diagrams — Part 1: Graphical symbols for conventional use and data-processing applications*

ISO 5598, *Fluid power systems and components — Vocabulary*

ISO 6358-1, *Pneumatic fluid power — Determination of flow-rate characteristics of components using compressible fluids — Part 1: General rules and test methods for steady-state flow*

3 Terms and definitions

For the purposes of this document, the terms and definitions given in ISO 5598, ISO 6358-1 and the following apply.

ISO and IEC maintain terminological databases for use in standardization at the following addresses:

— ISO Online browsing platform: available at https://www.iso.org/obp

— IEC Electropedia: available at http://www.electropedia.org/

4 Symbols and units

4.1 The symbols and units shall be in accordance with ISO 6358-1 and Table 2.

Table 2 — Symbols and units

Reference	Description	Symbol	Dimension[a]	SI units	Practical units
5.5.2	Time	t	T	s	s
5.4.3	Tank volume	V	L^3	m^3	dm^3
[a] T = time; L = length.					

4.2 The numerals used as subscripts to the symbols shall be in accordance with ISO 6358-1 and Table 3.

Table 3 — Subscripts

Subscript	Meaning
3	Tank conditions

4.3 The graphical symbols used in Figures 1 and 2 are in accordance with ISO 1219-1.

© ISO 2019 – All rights reserved
Documents
Document Sharing Hub
Full document details: BS ISO 6358-2:2019

5 Test installation

CAUTION — Figures 1 and 2 illustrate basic circuits that do not incorporate all the safety devices necessary to protect against damage in the event of component failure. It is important that those responsible for carrying out the test give due consideration to safeguarding both personnel and equipment.

5.1 Test circuit for discharge test

A suitable test circuit as shown in Figure 1 shall be used for the discharge test. See 5.3.5.

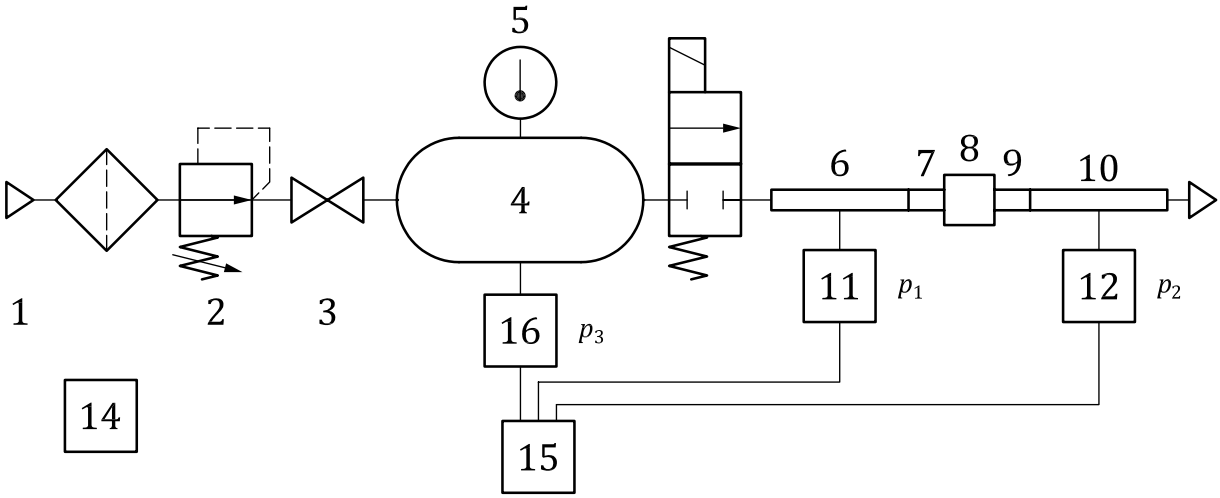

NOTE See Table 4 for the key to test circuit components.

Figure 1 — Test circuit for discharge test

5.2 Test circuit for charge test

A suitable test circuit as shown in Figure 2 shall be used for the charge test.

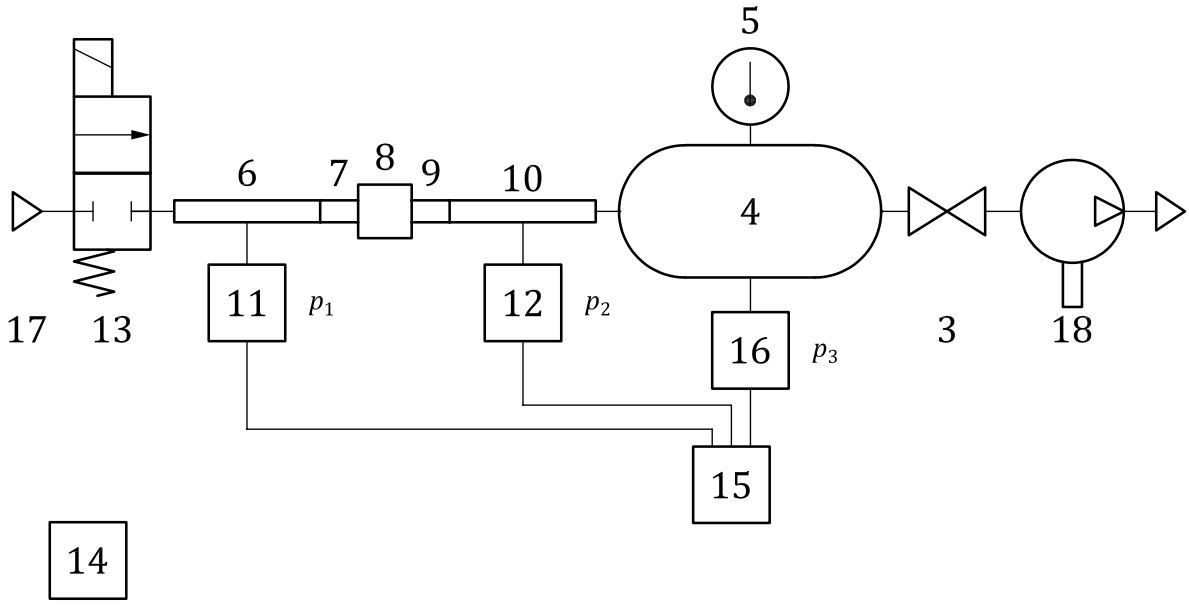

NOTE See Table 4 for the key to test circuit components.

Figure 2 — Test circuit for charge test

© ISO 2019 – All rights reserved

Documents
Document Sharing Hub
Full document details: BS ISO 6358-2:2019

Table 4 — Key to test circuit components shown in Figures 1 and 2

Key item number	Relevant subclause or paragraph	Description	Additional requirements
1	5.3.2	Compressed gas source and filter for discharge test	
2	—	Adjustable pressure regulator for discharge test	
3	—	Shut-off valve	
4	5.4	Tank	
5	-	Temperature-measuring instrument	
6	5.3.7	Upstream pressure-measuring tube	
7	5.3.7	Upstream transition connector	
8	—	Component under test	
9	5.3.7	Downstream transition connector	
10	5.3.7	Downstream pressure-measuring tube	
11	5.3.10	Pressure transducer	
12	5.3.10	Pressure transducer	
13	5.3.4 and 5.3.9	Flow control solenoid valve (optional)	The sonic conductance of this flow control valve shall be about four times larger than that of the component under test.
14	—	Barometer	
15	—	Digital recorder	
16	5.3.10	Pressure transducer	
17	—	Suction port for charge test	
18	—	Vacuum pump for charge test	

5.3 General requirements

5.3.1 The component under test shall be installed and operated in the test circuit in accordance with the manufacturer's operating instructions.

5.3.2 For the discharge test, a filter shall be installed which provides a standard of filtration specified by the manufacturer of the component under test.

5.3.3 A test set-up shall be constructed from the items listed in Table 4. Items 1 through 8, 11, and 14 through 16 are required for the discharge test. Items 3 through 12 and 14 through 18 are required for the charge test.

5.3.4 If the component under test has no control mechanism for shifting its position, install a flow control solenoid valve (item 13) upstream of pressure-measuring tube (item 6) in order to start the test.

5.3.5 Items 9, 10, and 12 are not required for the discharge test when the component under test does not have a downstream port. See the special instructions in 6.2.3.3.

5.3.6 The distance between the tank (item 4) and the upstream pressure-measuring tube (item 6) for the discharge test, or between the tank (item 4) and downstream pressure-measuring tube (item 10) for charge test, shall be as short as possible. The volumes of all components and conductors in Figures 1 and 2 between items 3 and 13 (if item 13 is used) or between items 3 and 8 (if item 13 is not used) shall be added to the volume of the tank.

© ISO 2019 – All rights reserved
Documents
Document Sharing Hub
Full document details: BS ISO 6358-2:2019

5.3.7 The pressure-measuring tubes (items 6 and 10) and the transition connectors (items 7 and 9) shall be in accordance with ISO 6358-1. It is not necessary to have a temperature-measuring connection in the pressure-measuring tubes because the temperature is measured in the tank.

5.3.8 For any locations where liquid can collect, installation of a drain separator is recommended.

5.3.9 The shifting time of the flow control solenoid valve (item 13) shall be sufficiently short to limit the transient time at the beginning of test data collection.

5.3.10 When connecting pressure measuring instruments, the dead volume shall be limited as much as possible to avoid long response time, delays, and phase lag for measurements.

5.4 Requirements for the tank (item 4)

5.4.1 Structure

The tank shall be suitably structured as shown in Figure 3 and consist of the components listed in Table 5. Dimensions of the flow port shall conform to the dimensions given in Table 6.

The ratio of the height of the tank to its diameter should not exceed 2:1.

The junction of the flow port with the internal surface of the tank shall be convergent shaped so as to avoid pressure loss. The dimensions and arrangement of connection ports other than the flow port are determined by the test operator.

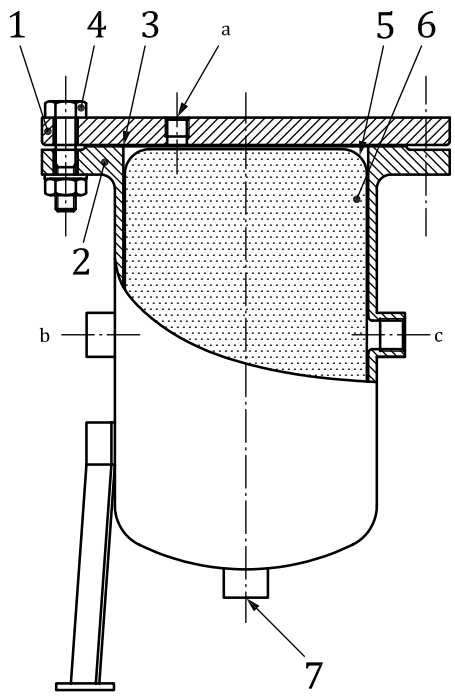

a Measuring ports (temperature and pressure).

b Source port.

c Flow port.

Figure 3 — Structure of the tank

© ISO 2019 – All rights reserved

Documents
Document Sharing Hub
Full document details: BS ISO 6358-2:2019

Table 5 — Key to tank components

Key item number	Description	Comments
1	Lid	
2	Tank body	
3	Gasket	
4	Flange fastener (nut and bolt)	Six or more pieces, equally arranged
5	Metal net	See 5.4.2.
6	Stuffed material	See 5.4.2.
7	Drain valve	

Table 6 — Thread size of flow port

Tank volume, V, in m^3	Thread size
$V \leq 0{,}0025$	G 1/8
$0{,}002\,5 < V \leq 0{,}006\,3$	G 1/4
$0{,}006\,3 < V \leq 0{,}014$	G 3/8
$0{,}014 < V \leq 0{,}032$	G 1/2
$0{,}032 < V \leq 0{,}066$	G 3/4
$0{,}066 < V \leq 0{,}100$	G 1
$0{,}100 < V \leq 0{,}190$	G 1 1/4
$0{,}190 < V \leq 0{,}310$	G 1 1/2
$0{,}310 < V \leq 0{,}510$	G 2
$0{,}510 < V \leq 0{,}730$	G 2 1/2
$0{,}730 < V \leq 1{,}100$	G 3

5.4.2 Stuffed material

The stuffed material, which is used to reduce the change in air temperature, shall be resistant to corrosion and pressure and shall be distributed evenly in the tank. If copper wires are used as the stuffed material, wires of equivalent diameter 3×10^{-5} m to 5×10^{-5} m shall be stuffed in the tank at a density of 3×10^{2} kg/m^3.

NOTE The equivalent diameter means the diameter of the cross-sectional area of a noncircular shape assumed as equivalent to the diameter of the cross-sectional area of a circular shape.

The stuffed material shall be wrapped with a metallic net to prevent it from flowing out of the flow port. It is desirable that a suitable frame supports the stuffed material to prevent it from leaning inside the tank. Further information is given in Annex C.

5.4.3 Volume

The volume of the tank, V, in m^3 should be calculated using Formula (1):

$$V \geq 5 \times 10^{5}\, C \tag{1}$$

where C is the estimated sonic conductance of the component under test, in m^3/(s·Pa)(ANR).

NOTE 1 The tank volume is the net value obtained by subtracting the volume of the stuffed material from the volume of the empty air tank.

NOTE 2 The test method to determine the tank volume is given in Annex B.

© ISO 2019 – All rights reserved
Documents
Document Sharing Hub
Full document details: BS ISO 6358-2:2019

5.5 Special requirements

5.5.1 The special requirements given in ISO 6358-1:2013, 5.6 apply for this document.

5.5.2 The digital recorder shall be set to sample pressure at a time interval determined in accordance with Formula (2) or (3). Approximately 1000 pressure data points should be obtained during the main variation of the tank pressure p_3 for discharge or charge tests. These criteria have an effect on the calculations performed in 6.3.

— For discharge tests:

$$\Delta t \approx 2{,}5\times10^{-8}\,\frac{V}{C} \tag{2}$$

— For charge tests:

$$\Delta t \approx 1{,}5\times10^{-8}\,\frac{V}{C} \tag{3}$$

where

Δt is the time interval for sampling pressure, in s;

C is the estimated sonic conductance of the component under test, in $m^3/(s{\cdot}Pa)$(ANR);

V is the tank volume, in m^3.

5.5.3 If the number of pressure data points recorded during the main variation of the tank pressure p_3 of discharge or charge tests is less than 1000, reduce the sampling interval Δt as needed and repeat the test.

NOTE 1 The beginning of the main variation of tank pressure p_3 is the time at which the solenoid valve 13 is opened.

NOTE 2 The end of the main variation of the tank pressure p_3 is the time at which tank pressure p_3 reaches 98 % of its total variation.

6 Test procedures

6.1 Test conditions

6.1.1 Test fluid

6.1.1.1 Air should be used as the test fluid. If a different fluid is used, it shall be stated in the test report.

6.1.1.2 The gas shall be filtered and conditioned to comply with the recommendations of the manufacturer of the component under test.

6.1.2 Checks

Periodically check that the pressure-tapping holes are not blocked by liquids or solid particles.

© ISO 2019 – All rights reserved

Documents
Document Sharing Hub
Full document details: BS ISO 6358-2:2019