BS ISO 6460-1:2022

BSI Standards Publication

Motorcycles — Measurement method for gaseous exhaust emissions and fuel consumption

Part 1: General test requirements

Documents
Document Sharing Hub

Full document details: BS ISO 6460-1:2022

National foreword

This British Standard is the UK implementation of ISO 6460-1:2022. It supersedes BS ISO 6460-1:2007+A1:2015, which is withdrawn.

The UK participation in its preparation was entrusted to Technical Committee AUE/14, Motor cycles and mopeds.

A list of organizations represented on this committee can be obtained on request to its committee manager.

Contractual and legal considerations

This publication has been prepared in good faith, however no representation, warranty, assurance or undertaking (express or implied) is or will be made, and no responsibility or liability is or will be accepted by BSI in relation to the adequacy, accuracy, completeness or reasonableness of this publication. All and any such responsibility and liability is expressly disclaimed to the full extent permitted by the law.

This publication is provided as is, and is to be used at the recipient's own risk.

The recipient is advised to consider seeking professional guidance with respect to its use of this publication.

This publication is not intended to constitute a contract. Users are responsible for its correct application.

© The British Standards Institution 2022
Published by BSI Standards Limited 2022

ISBN 978 0 539 02658 0

ICS 13.040.50; 43.140

Compliance with a British Standard cannot confer immunity from legal obligations.

This British Standard was published under the authority of the Standards Policy and Strategy Committee on 31 March 2022.

Amendments/corrigenda issued since publication

Date	Text affected

Documents
Document Sharing Hub

Full document details: BS ISO 6460-1:2022

INTERNATIONAL STANDARD

ISO 6460-1

Second edition
2022-02

Motorcycles — Measurement method for gaseous exhaust emissions and fuel consumption —

Part 1: General test requirements

Motocycles — Méthode de mesure des émissions de gaz d'échappement et de la consommation de carburant —

Partie 1: Exigences générales d'essai

Reference number
ISO 6460-1:2022(E)

Documents
Document Sharing Hub

© ISO 2022

Full document details: BS ISO 6460-1:2022

COPYRIGHT PROTECTED DOCUMENT

© ISO 2022

All rights reserved. Unless otherwise specified, or required in the context of its implementation, no part of this publication may be reproduced or utilized otherwise in any form or by any means, electronic or mechanical, including photocopying, or posting on the internet or an intranet, without prior written permission. Permission can be requested from either ISO at the address below or ISO's member body in the country of the requester.

ISO copyright office
CP 401 • Ch. de Blandonnet 8
CH-1214 Vernier, Geneva
Phone: +41 22 749 01 11
Email: copyright@iso.org
Website: www.iso.org

Published in Switzerland

© ISO 2022 – All rights reserved

Documents
Document Sharing Hub

Full document details: BS ISO 6460-1:2022

Contents

Page

Foreword ..... **v**

Introduction ..... **vi**

1 Scope **1**

2 Normative references **1**

3 Terms and definitions **1**

4 Symbols **2**

5 Standard reference conditions **5**

6 Tests **5**
- 6.1 Measurement of gaseous exhaust emissions 5
  - 6.1.1 Average gaseous exhaust emissions during conventional test cycles 5
  - 6.1.2 Measurement of gaseous exhaust emissions at an idling speed 5
- 6.2 Measurement of fuel consumption 5
  - 6.2.1 Average fuel consumption during conventional test cycles 5
  - 6.2.2 Fuel consumption at a constant speed 5

7 Measurement equipment **5**
- 7.1 General 5
- 7.2 Chassis dynamometer 5
- 7.3 Gas-collection equipment 5
- 7.4 Analytical equipment 7
- 7.5 Cooling equipment 8
- 7.6 Fuel consumption measurement 8
- 7.7 Accuracy of instruments and measurements 9

8 Preparing the test **9**
- 8.1 Engine fuel and lubricants 9
- 8.2 Description of the test motorcycle 9
- 8.3 Conditioning/preparation of the test motorcycle 9
- 8.4 Calibration and adjustment of analysers 10
  - 8.4.1 Calibration of the analysers 10
  - 8.4.2 Adjustment of the analysers 11
  - 8.4.3 Reference gases and accuracy of the mixing device 13

9 CVS system check procedure **13**

10 Procedure for sampling, analysing and measuring the volume of gaseous exhaust emissions **14**
- 10.1 Operations to be carried out before the test motorcycle start up 14
- 10.2 Beginning of sampling and volume measurement 17
- 10.3 End of sampling and volume measurement 17
- 10.4 Analysis 17
- 10.5 Measuring the driving distance 18
- 10.6 Open type CVS system 18

11 Determination of the quantity of gaseous exhaust emissions **18**
- 11.1 Total diluted exhaust mixture volume corrected to the standard reference conditions 18
  - 11.1.1 Total diluted exhaust mixture volume for the CVS system with CFV 18
  - 11.1.2 Total diluted exhaust mixture volume for the CVS system with PDP 19
  - 11.1.3 Total diluted exhaust mixture volume for the CVS system with SSV 19
- 11.2 Exhaust emissions sampling and the dilution factor 20
  - 11.2.1 Exhaust emissions sampling 20
  - 11.2.2 Dilution factor 20
- 11.3 Mass of the gaseous exhaust emissions 21
  - 11.3.1 Mass of carbon monoxide 21

AVA Documents
Document Sharing Hub

© ISO 2022 – All rights reserved

Full document details: BS ISO 6460-1:2022

11.3.2 Mass of total hydrocarbons ... 22
11.3.3 Mass of non-methane hydrocarbons ... 22
11.3.4 Mass of nitrogen oxides ... 24
11.3.5 Mass of carbon dioxide ... 25

12 Determination of the fuel consumption ... 25
12.1 Carbon balance method ... 25
12.1.1 Fuel consumption for four-stroke engines ... 25
12.1.2 Calculation of results in litres per 100 km ... 26
12.2 Fuel flow measurement method ... 26
12.2.1 Fuel consumption for four-stroke engines ... 27
12.2.2 Calculation of results in litres per 100 km ... 27

Annex A (normative) **Method and equipment for measuring fuel consumption by the fuel flow measurement method ... 28**

Annex B (informative) **Example for record form of test fuel specifications ... 39**

Annex C (informative) **Exhaust emissions leakage check procedure for the open type CVS system ... 40**

Annex D (informative) **Determination of the dilution factor ... 46**

Annex E (informative) **Principle of the carbon balance method for four-stroke engines ... 55**

Annex F (informative) **Simplified determination method of the atom number ratio of hydrogen and carbon, and that of oxygen and carbon in gasoline ... 56**

Annex G (informative) **CVS system check procedure ... 57**

Bibliography ... 58

© ISO 2022 – All rights reserved
Documents
Document Sharing Hub
Full document details: BS ISO 6460-1:2022

Foreword

ISO (the International Organization for Standardization) is a worldwide federation of national standards bodies (ISO member bodies). The work of preparing International Standards is normally carried out through ISO technical committees. Each member body interested in a subject for which a technical committee has been established has the right to be represented on that committee. International organizations, governmental and non-governmental, in liaison with ISO, also take part in the work. ISO collaborates closely with the International Electrotechnical Commission (IEC) on all matters of electrotechnical standardization.

The procedures used to develop this document and those intended for its further maintenance are described in the ISO/IEC Directives, Part 1. In particular, the different approval criteria needed for the different types of ISO documents should be noted. This document was drafted in accordance with the editorial rules of the ISO/IEC Directives, Part 2 (see www.iso.org/directives).

Attention is drawn to the possibility that some of the elements of this document may be the subject of patent rights. ISO shall not be held responsible for identifying any or all such patent rights. Details of any patent rights identified during the development of the document will be in the Introduction and/or on the ISO list of patent declarations received (see www.iso.org/patents).

Any trade name used in this document is information given for the convenience of users and does not constitute an endorsement.

For an explanation of the voluntary nature of standards, the meaning of ISO specific terms and expressions related to conformity assessment, as well as information about ISO's adherence to the World Trade Organization (WTO) principles in the Technical Barriers to Trade (TBT), see www.iso.org/iso/foreword.html.

This document was prepared by Technical Committee ISO/TC 32, *Road vehicles*, Subcommittee SC 38, *Motorcycles and mopeds*.

This second edition cancels and replaces the first edition (ISO 6460-1:2007), which has been technically revised. It also incorporates the Amendment ISO 6460-1:2007/Amd.1:2015.

The main changes are as follows:

— addition of a detailed description of a critical flow venturi (CFV) as a flow measurement principle to the CVS system;

— permission to use of the subsonic venturi (SSV) as a flow measurement principle to the CVS system;

— addition for the measurement of methane (CH_4) concentration, either a GC-FID (flame ionization detector with gas chromatograph) or an NMC-FID (flame ionization detector with non-methane cutter);

— addition of a calculation method for non-methane hydrocarbons (NMHC);

— permission to determine the ratio of hydrogen and carbon (R_{HC}) and the ratio of oxygen and carbon (R_{OC}) by the content analysis of fuel;

— addition of calculation methods for the mass of the gaseous exhaust emissions and the fuel consumption when using oxygenated fuels;

— deletion of descriptions related two-stroke engines and diesel fuel.

A list of all parts in the ISO 6460 series can be found on the ISO website.

Any feedback or questions on this document should be directed to the user's national standards body. A complete listing of these bodies can be found at www.iso.org/members.html.

© ISO 2022 – All rights reserved

Documents
Document Sharing Hub
Full document details: BS ISO 6460-1:2022

Introduction

For the measurement of motorcycle fuel consumption, the carbon balance method, where the fuel consumption is calculated from analysis of the carbon quantity in the exhaust emissions, is now widely used in addition to the conventional fuel flow measurement. Therefore, the measurement of exhaust emissions pollutants and fuel consumption are inseparably related to each other.

This document defines the fundamental elements such as the measurement accuracy, test motorcycle conditions and the details of the carbon balance method. The measurement of gaseous exhaust emissions and fuel consumption during test cycles can be conducted by means of this document and ISO 6460-2. Additionally with ISO 6460-3, these three documents provide details of those measurements at a constant speed.

The following revisions are mainly made in this document.

— The detailed description of a critical flow venturi (CFV), adopted by most of the manufacturers as well as a positive displacement pump (PDP), is added as a flow measurement principle to the CVS system. Also, the use of the subsonic venturi (SSV) is also permitted as a CVS flow measurement principle.

— For measurement of methane (CH_4) concentration in the diluted exhaust mixture, either a GC-FID (flame ionization detector with gas chromatograph) or an NMC-FID (flame ionization detector with non-methane cutter) shall be used as the analytical instrument. The formula for calculating non-methane hydrocarbons (NMHC) is also defined.

— Instead of obtaining the ratio of hydrogen and carbon (R_{HC}) and the ratio of oxygen and carbon (R_{OC}) from the exhaust emissions analysis, R_{HC} and R_{OC} shall be determined by the fuel analysis. In addition, when using the oxygenated fuels such as gasoline (E5) and gasoline (E10), the mass of the gaseous exhaust emissions and the fuel consumption also can be calculated.

— As there has been no need for newly development of two-stroke engines and compression ignition engines in recent years, the description regarding two-stroke engines and diesel fuel is to be deleted. If these are required, see ISO 6460-1:2007.

© ISO 2022 – All rights reserved
Documents
Document Sharing Hub
Full document details: BS ISO 6460-1:2022

Motorcycles — Measurement method for gaseous exhaust emissions and fuel consumption —

Part 1:
General test requirements

1 Scope

This document specifies the general test requirements for measurement of the gaseous exhaust emissions from motorcycles, and for determining the fuel consumption of motorcycles as defined in ISO 3833. It is applicable to motorcycles equipped with a spark ignition engine (four-stroke engine or rotary piston engine).

2 Normative references

The following documents are referred to in the text in such a way that some or all of their content constitutes requirements of this document. For dated references, only the edition cited applies. For undated references, the latest edition of the referenced document (including any amendments) applies.

ISO 3833, *Road vehicles — Types — Terms and definitions*

ISO 6460-2:2014, *Motorcycles — Measurement method for gaseous exhaust emissions and fuel consumption — Part 2: Test cycles and specific test conditions*

ISO 6460-3:2007, *Motorcycles — Measurement method for gaseous exhaust emissions and fuel consumption — Part 3: Fuel consumption measurement at a constant speed*

ISO 11486:2006, *Motorcycles — Methods for setting running resistance on a chassis dynamometer*

3 Terms and definitions

For the purposes of this document, the terms and definitions given in ISO 3833 and the following apply.

ISO and IEC maintain terminological databases for use in standardization at the following addresses:

— ISO Online browsing platform: available at https://www.iso.org/obp

— IEC Electropedia: available at https://www.electropedia.org/

3.1
equivalent inertia
total inertia of the rotating masses of the chassis dynamometer, determined with respect to the reference mass of the test motorcycle, which is total unladen mass of the test motorcycle increased by a uniform figure of 75 kg, which represents the mass of a rider

Note 1 to entry: Total unladen mass of the test motorcycle includes mass of the vehicle with bodywork and all fitted equipment, electrical and auxiliary equipment for normal operation of vehicle, including liquids, tools, fire extinguisher, standard spare parts, chocks and spare wheel, if fitted.

The fuel tank shall be filled to at least 90 % of rated capacity and the other liquid containing systems to 100 % of the capacity specified by the manufacturer.

© ISO 2022 – All rights reserved

Documents
Document Sharing Hub
Full document details: BS ISO 6460-1:2022

3.2
gaseous exhaust emissions
emissions of gaseous pollutants from the tailpipe of test motorcycles, such as carbon monoxide (CO), total hydrocarbons (THC), non-methane hydrocarbons (NMHC), nitrogen oxides (NOx) as gaseous pollutants and carbon dioxide (CO_2)

4 Symbols

Table 1 — Symbols

Symbols	Definition	Unit [a]
$c_{CH4,d}$	methane concentration in the dilution air, expressed in ppm carbon equivalent	ppmC
$c_{CH4,e}$	methane concentration in the diluted exhaust mixture, expressed in ppm carbon equivalent	ppmC
$c_{CH4,ec}$	volumetric concentration of methane in the diluted exhaust mixture, expressed in ppm carbon equivalent, corrected to take account of methane in the dilution air	ppmC
$c_{CO,d}$	carbon monoxide concentration in the dilution air	ppm
$c_{CO,dm}$	carbon monoxide concentration in the dilution air with the water vapour and carbon dioxide absorbent	ppm
$c_{CO,e}$	carbon monoxide concentration in the diluted exhaust mixture	ppm
$c_{CO,ec}$	volumetric concentration of carbon monoxide in the diluted exhaust mixture, corrected to take account of carbon monoxide in the dilution air	ppm
$c_{CO,em}$	carbon monoxide concentration in the diluted exhaust mixture with the water vapour and carbon dioxide absorbent	ppm
$c_{CO2,d}$	carbon dioxide concentration in the dilution air	%
$c_{CO2,e}$	carbon dioxide concentration in the diluted exhaust mixture	%
$c_{CO2,ec}$	volumetric concentration of carbon dioxide in the diluted exhaust mixture, corrected to take account of carbon dioxide in the dilution air	%
$c_{HC(w/\ NMC)}$	hydrocarbon concentration measured by the NMC-FID with sample gas flowing through the NMC, expressed in ppm carbon equivalent	ppmC
$c_{HC(w/\ NMC),d}$	hydrocarbon concentration in the dilution air with sample gas flowing through the NMC, expressed in ppm carbon equivalent	ppmC
$c_{HC(w/\ NMC),e}$	hydrocarbon concentration in the diluted exhaust mixture with sample gas flowing through the NMC, expressed in ppm carbon equivalent	ppmC
$c_{HC(w/\ NMC),ec}$	volumetric concentration of hydrocarbon in the diluted exhaust mixture with sample gas flowing through the NMC, expressed in ppm carbon equivalent, corrected to take account of hydrocarbon in the dilution air	ppmC
$c_{HC(w/o\ NMC)}$	hydrocarbon concentration measured by the NMC-FID with sample gas bypassing the NMC, expressed in ppm carbon equivalent	ppmC
$c_{HC(w/o\ NMC),d}$	hydrocarbon concentration in the dilution air with sample gas bypassing the NMC, expressed in ppm carbon equivalent	ppmC
$c_{HC(w/o\ NMC),e}$	hydrocarbon concentration in the diluted exhaust mixture with sample gas bypassing the NMC, expressed in ppm carbon equivalent	ppmC
$c_{HC(w/o\ NMC),ec}$	volumetric concentration of hydrocarbon in the diluted exhaust mixture with sample gas bypassing the NMC, ppm C, expressed in ppm carbon equivalent, corrected to take account of hydrocarbon in the dilution air	ppmC
$c_{NMHC,ec}$	volumetric concentration of non-methane hydrocarbon in the diluted exhaust mixture, expressed in ppm carbon equivalent, corrected to take account of non-methane hydrocarbon in the dilution air	ppmC
$c_{NOx,d}$	nitrogen oxides concentration in the dilution air	ppm
$c_{NOx,e}$	nitrogen oxides concentration in the diluted exhaust mixture	ppm

[a] ppm = parts per million.

© ISO 2022 – All rights reserved
Documents
Document Sharing Hub
Full document details: BS ISO 6460-1:2022

Table 1 *(continued)*

Symbols	Definition	Unit [a]
$c_{NOx,ec}$	volumetric concentration of nitrogen oxides in the diluted exhaust mixture, corrected to take account of nitrogen oxides in the dilution air	ppm
$c_{O2,d}$	oxygen concentration in the dilution air	%
$c_{Pi,ec}$	concentration of the pollutant *i* in the diluted exhaust mixture, corrected to take account of the amount of the pollutant *i* contained in the dilution air	ppm
$c_{THC,d}$	total hydrocarbon concentration in the dilution air, expressed in ppm carbon equivalent	ppmC
$c_{THC,e}$	total hydrocarbon concentration in the diluted exhaust mixture, expressed in ppm carbon equivalent	ppmC
$c_{THC,ec}$	volumetric concentration of total hydrocarbon in the diluted exhaust mixture, expressed in ppm carbon equivalent, corrected to take account of total hydrocarbon in the dilution air	ppmC
C_d	discharge coefficient of the SSV	—
d_{in}	diameter of the SSV inlet pipe inner	m
d_v	diameter of the SSV throat	m
D_f	dilution factor	—
E_E	ethane conversion efficiency	—
E_M	methane conversion efficiency	—
F_c	specific fuel consumption	km/l
F_{c100}	fuel consumption per 100 km	l/100 km
H_a	absolute humidity in grams of water per kilogram of dry air	—
H_d	relative humidity of dilution air	%
H_r	relative humidity in the test room	%
H_0	standard relative humidity	%
K_H	humidity correction factor used for the calculation of the mass emissions of nitrogen oxides	—
k_1	critical flow venturi correction factor	—
k_2	ratio of pressure to temperature at the standard reference conditions	—
k_3	collection of constants and unit conversions	—
m_{CO}	mass of carbon monoxide in the gaseous exhaust emissions	g/km
m_{CO2}	mass of carbon dioxide in the gaseous exhaust emissions	g/km
m_F	mass of fuel consumed	g
m_{NMHC}	mass of non-methane hydrocarbon in the gaseous exhaust emissions	g/km
m_{NOx}	mass of nitrogen oxides in the gaseous exhaust emissions	g/km
m_{Pi}	mass emission of the pollutant *i*	g
m_{THC}	mass of total hydrocarbon in the gaseous exhaust emissions	g/km
N	number of revolutions of positive displacement pump during the test while samples are being collected	—
p_a	mean barometric pressure during the test in the test room	kPa
p_d	saturated water vapour pressure during the test in the test room	kPa
p_p	absolute pressure of the diluted exhaust mixture at the inlet of positive displacement pump	kPa
p_v	absolute pressure at the venturi inlet	kPa
$p_{v(t)}$	absolute pressure of the diluted exhaust mixture at the venturi inlet	kPa
p_0	total barometric pressure at the standard reference conditions	kPa

[a] ppm = parts per million.

AVA Documents
Document Sharing Hub

© ISO 2022 – All rights reserved

Full document details: BS ISO 6460-1:2022

Table 1 *(continued)*

Symbols	Definition	Unit [a]
Q_a	measured flow rate of venturi using the other gas flowmeter	m^3/s
Q_{cal}	measured flow rate of venturi at standard reference conditions	m^3/s
r_x	ratio of the SSV throat pressure to inlet absolute static pressure, $1-(\Delta p / p_v)$	—
r_y	ratio of the SSV throat diameter d_v to the inlet pipe inner diameter d_{in}, d_v / d_{in}	—
$R_{HC,ex}$	atom number ratio of hydrogen and carbon in the gaseous exhaust emissions	—
$R_{HC,F}$	atom number ratio of hydrogen and carbon in the fuel	—
$R_{OC,ex}$	atom number ratio of oxygen and carbon in the gaseous exhaust emissions	—
$R_{OC,F}$	atom number ratio of oxygen and carbon in the fuel	—
$R_{f,CH4}$	response factor of CH_4 for an FID	—
$R_{f,C3H6}$	response factor of C_3H_6 for an FID	—
$R_{f,C3H8}$	response factor of C_3H_8 for an FID	
$R_{f,C7H8}$	response factor of C_7H_8 for an FID	—
S	running distance actually travelled	km
t	time	s
t_{test}	total test time	s
T_a	measured ambient temperature during the test in the test room	K
T_F	fuel temperature measured at the burette	K
T_p	temperature of diluted exhaust mixture at the positive displacement pump inlet during the test while samples are being collected	K
T_v	temperature at the venturi inlet	K
$T_{v(t)}$	temperature of diluted exhaust mixture at the venturi inlet	K
T_0	air temperature at the standard reference conditions	K
V	measured volume of fuel consumed	l
V_d	dilution air volume	m^3
V_e	volume of the diluted exhaust mixture expressed corrected to the standard reference conditions	m^3/km
V_{ex}	gaseous exhaust emissions volume	m^3
$V_{i,e}$	volume of the diluted exhaust mixture in one test under the standard reference conditions	l
V_p	diluted exhaust mixture volume pumped by the positive displacement pump per one revolution	l
V_s	total diluted exhaust mixture volume during one test	m^3
α	coefficient of volumetric expansion for the fuel	K^{-1}
ρ_{CO}	carbon monoxide density at the standard reference conditions	g/m^3
ρ_{CO2}	carbon dioxide density at the standard reference conditions	g/m^3
ρ_F	fuel density at 288,15 K	kg/l
ρ_{NMHC}	non-methane hydrocarbon density at the standard reference conditions	g/m^3
ρ_{NOx}	nitrogen oxides density at the standard reference conditions, expressed in equivalent NO_2	g/m^3
ρ_{Pi}	density of the pollutant *i* at the standard reference conditions	g/l
ρ_{THC}	total hydrocarbon density at the standard reference conditions	g/m^3
ρ_0	air volumetric mass at the standard reference conditions	kg/m^3

[a] ppm = parts per million.

© ISO 2022 – All rights reserved

Documents
Document Sharing Hub
Full document details: BS ISO 6460-1:2022

5 Standard reference conditions

The standard reference conditions shall be as follows:

Total barometric pressure, p_0: 101,325 kPa;

Air temperature, T_0: 273,15 K;

Relative humidity, H_0: 65 %;

Air volumetric mass, ρ_0: 1,293 kg/m^3.

6 Tests

6.1 Measurement of gaseous exhaust emissions

6.1.1 Average gaseous exhaust emissions during conventional test cycles

The test shall be carried out in accordance with the procedure described in ISO 6460-2. The appropriate test cycle shall be selected.

6.1.2 Measurement of gaseous exhaust emissions at an idling speed

The test shall be carried out in accordance with the procedure described in ISO 6460-2.

6.2 Measurement of fuel consumption

6.2.1 Average fuel consumption during conventional test cycles

The test shall be carried out in accordance with the procedure described in ISO 6460-2. The appropriate test cycle shall be selected.

6.2.2 Fuel consumption at a constant speed

The test shall be carried out in accordance with the procedure described in ISO 6460-3.

7 Measurement equipment

7.1 General

Irrespective of the provisions in this clause, any measurement system(s) may be used when the performance of the equipment is proven by the equipment manufacturer to be equivalent to the constant volume sampler (CVS) system.

7.2 Chassis dynamometer

The chassis dynamometer shall be set in accordance with ISO 11486. The equivalent inertia mass for the table method shall be in accordance with ISO 11486:2006, Table 4.

7.3 Gas-collection equipment

7.3.1 The gas-collection equipment shall be a closed type system that can collect all exhaust emissions at the motorcycle exhaust outlet(s) providing that it satisfies the backpressure condition of ±1,25 kPa. An open type system may be used as well if it is confirmed that all the exhaust emissions are collected.

© ISO 2022 – All rights reserved

Documents
Document Sharing Hub
Full document details: BS ISO 6460-1:2022

The exhaust emissions collection shall be such that there is no condensation, which may appreciably modify the nature of exhaust emissions at the test temperature.

7.3.2 The gas-collection equipment and connecting tube between the gas-collection equipment and the exhaust emissions sampling system shall be made of stainless steel or of some other material which does not affect the composition of the exhaust emissions collected and which withstands the temperature of the exhaust emissions.

7.3.3 The CVS system with a critical flow venturi (CFV) or the CVS system with a positive displacement pump (PDP) shall be used for the exhaust emissions sampling system.

7.3.3.1 The CVS system with CFV shall be applicable to the requirements in this subclause.

a) The capacity of CFV shall be large enough to ensure the inlet of all the diluted exhaust mixture.

b) An instrument capable of calculating the venturi flow rate based on the measuring results of temperature and absolute pressure of the diluted exhaust mixture sucked into CFV shall be equipped.

c) A dilution air sampling probe of the closed type exhaust emissions sampling system shall be set at the lower reaches of the dilution air filter. This sampling probe shall be capable of collecting the dilution air at a constant flow rate through the sampling pump, the filter and the flow meter during the test. The dilution air sampling probe of the open type exhaust emissions sampling system shall be set in the vicinity of and outside of the exhaust emissions sampling system of the open type CVS system. This sampling probe shall be capable of collecting the dilution air at a constant flow rate through the sampling pump, the filter and the flow meter during the test.

d) A diluted exhaust mixture sampling probe pointing to the upper reaches of the diluted exhaust mixture shall be set at the upper part in the vicinity of CFV inlet. The diluted exhaust mixture shall be collected at the flow rate in proportion to the diluted exhaust mixture flow rate through the sampling pump, the filter and the flow meter during the test.

e) A flow rate integrator for integrating the diluted exhaust mixture flow rate during the test shall be equipped.

7.3.3.2 The CVS system with PDP shall be applicable to the requirements in this subclause.

a) A heat exchanger shall be capable of limiting the temperature variation of the diluted exhaust mixture at PDP inlet to ±5 K throughout the test. This exchanger shall be equipped with a preheating system capable of bringing the exchanger to its operating temperature (with the tolerance of ±5 K) before the test begins.

b) PDP for drawing in the diluted exhaust mixture shall be equipped with a motor capable of controlling the diluted exhaust mixture flow speed to several constant speeds strictly. The capacity of PDP shall be large enough to ensure the intake of all the exhaust emissions.

c) A device capable of continuous recording of the temperature of the diluted exhaust mixture entering PDP shall be equipped. A device to allow continuous recording of the temperature of the diluted exhaust mixture entering PDP shall be equipped.

d) An instrument capable of measuring the pressure depression of the diluted exhaust mixture entering PDP relative to the atmospheric pressure and an instrument capable of measuring the pressure difference between the inlet and the outlet of PDP shall be equipped.

e) A dilution air sampling probe of the closed type exhaust emissions sampling system shall be set at the lower reaches of the dilution air filter. This sampling probe shall be capable of collecting the dilution air through the sampling pump, the filter and the flow meter at a constant flow rate during the test. A dilution air sampling probe of the open type exhaust emissions sampling system shall be set in the vicinity of and outside of the exhaust emissions sampling system of the open type CVS

© ISO 2022 – All rights reserved
Documents
Document Sharing Hub
Full document details: BS ISO 6460-1:2022

system. This sampling probe shall be capable of collecting the dilution air at a constant flow rate through the sampling pump, the filter and the flow meter during the test.

f) A diluted exhaust mixture sampling probe pointing to the upper reaches of the diluted exhaust mixture shall be set at the upper reaches of PDP. This sampling probe shall be capable of collecting the diluted exhaust mixture at a constant flow rate through the sampling pump, the filter and the flow meter during the test.

g) A revolution counter for counting the revolution of PDP during the test shall be equipped.

7.3.4 A device using a subsonic venturi (SSV) may also be used. The use of SSV for the CVS system is based on the principles of flow mechanics. The flow rate of the diluted exhaust mixture is maintained at a subsonic velocity which is calculated from the physical dimensions of the subsonic venturi and measurement of the absolute temperature and pressure at the venturi inlet and the pressure in the throat of the venturi. The flow rate is continually computed and integrated throughout the test.

7.3.5 In the case of the CVS system with CFV, the sampling venturi shall be set at the place where the temperature and the absolute pressure are same as those of the main critical flow venturi inlet. The sampling flow rates in proportion to the diluted exhaust mixture flow rate shall be obtained.

In the case of the CVS system with PDP, the diluted exhaust mixture flow rate and the sampling flow rates shall be steady within ±5 %.

If the device cannot compensate for variations in the temperature of the mixture of exhaust emissions and dilution air at the measuring point, a heat exchanger shall be used to maintain the temperature to within ±6 K of the specified operating temperature for the CVS with PDP, and ±11 K for the CVS with CFV and SSV.

7.3.6 A sampling system shall be equipped with the valves directing the samples either to the sampling bags or to the atmosphere. The minimum sampling flow rate shall be 150 l/h.

7.3.7 The sampling bags shall be airtight for collecting the dilution air and the diluted exhaust mixture, and shall have sufficient capacity so as not to impede the normal sample flow and not to change the nature of the exhaust emissions to be measured. The sampling bags shall be equipped with the automatic self-locking devices, and shall be easily and tightly connected either to the sampling system during the sampling period and to the analysing system at the end of the test.

NOTE 1 Pay attention to the connecting method and the material or configuration of the connecting parts because there is a possibility that each section (e.g. adapters, couplers) of the sampling system becomes very hot. If the measurement cannot be performed normally due to the heat-damages of the sampling system, an auxiliary cooling device is used as long as the exhaust emissions are not affected.

NOTE 2 In the case of the open type exhaust emissions sampling system, there is a risk of the incomplete exhaust emissions collection and the exhaust emissions leakage into the test room. So it is important to make sure that there is no leakage during the sampling period.

NOTE 3 If a constant CVS flow rate is used during the test using the test cycles including low speeds and high speeds, it is important to pay attention to the water condensation in the high-speed range.

7.4 Analytical equipment

7.4.1 The sample probe shall consist of a sampling tube leading into the collecting bags, or of a drainage tube. This sample probe shall be made of stainless steel or of some other material that will not adversely affect the composition of the exhaust emissions to be analysed. The temperature of the tubes connecting to the analyser, including the sampling probe, shall be same as the ambient temperature or above.

© ISO 2022 – All rights reserved

Documents
Document Sharing Hub
Full document details: BS ISO 6460-1:2022

7.4.2 Analysers shall be of the following types:

a) non-dispersive infrared absorption (NDIR) type for CO and CO_2;

b) flame ionization (FID) type for THC;

c) either a gas chromatograph combined with an FID (GC-FID), or an FID combined with a non-methane cutter (NMC-FID) for methane (CH_4);

d) chemiluminescence (CLD) type for NOx.

7.5 Cooling equipment

Throughout the test, a variable speed cooling blower shall be positioned in front of the test motorcycle, so as to direct the cooling air to the test motorcycle in a manner which simulates actual operating conditions. The blower speed shall be such that, within the operating range of 10 km/h to 50 km/h, the linear velocity of the air at the blower outlet should be within ±5 km/h of the corresponding roller speed. At the range of over 50 km/h, the linear velocity of the air shall be within ±10 % of roller speed. At the roller speeds of less than 10 km/h, air velocity may be zero.

The air velocity shall be determined as an averaged value of 9 measuring points which are located at the centre of each rectangle dividing the whole of the blower outlet into 9 areas (dividing both of horizontal and vertical sides of the blower outlet into 3 equal parts). Each value at those 9 points shall be within ±10 % of the average value of the 9 points.

The blower outlet shall have a cross section area of at least 0,4 m^2 and the bottom of the blower outlet shall be between 5 cm and 20 cm above floor level. The blower outlet shall be perpendicular to the longitudinal axis of the test motorcycle between 30 cm and 45 cm in front of its front wheel. The device used to measure the linear velocity of the air shall be located at between 0 cm and 20 cm from the air outlet.

7.6 Fuel consumption measurement

7.6.1 One of the following methods shall be used to measure the fuel consumption, depending on the characteristics of each method and on the type of test to be performed (conventional test cycle or constant speed):

a) carbon balance method;

b) volumetric method;

c) gravimetric method;

d) flowmeter method.

The carbon balance method shall be applied in accordance with 12.1.

Other methods may be used if it can be proved that the results given are equivalent.

7.6.2 Fuel shall be supplied to the engine by a device capable of measuring the quantity of fuel supplied with an accuracy of ±1 % in accordance with Annex A, and which does not interfere with the supply of fuel to the engine. When the measuring system is the volumetric method or the flowmeter method, the temperature of the fuel in the device or in the device outlet shall be measured.

Switching from the normal supply system to the measuring supply system shall be done by means of a valve system and shall take no more than 0,2 s.

Annex A gives the description and the methods of use of the appropriate devices for fuel flow measurement.

© ISO 2022 – All rights reserved
Documents
Document Sharing Hub
Full document details: BS ISO 6460-1:2022

7.7 Accuracy of instruments and measurements

7.7.1 The distance travelled by the test motorcycle shall be measured with an accuracy of ±1 %.

7.7.2 The speed of the test motorcycle shall be measured with an accuracy of ±1 % to the resolution of 0,1 km/h. For speeds less than 10 km/h, the speed shall be measured to the resolution of 0,1 km/h.

7.7.3 The ambient temperatures shall be measured with an accuracy of ±1 K.

7.7.4 The atmospheric pressure shall be measured with an accuracy of ±0,2 kPa.

7.7.5 The relative humidity of the ambient air shall be measured with an accuracy of ±5 %.

7.7.6 The pressures considered in 7.3.3.1 b) and 7.3.3.2 d) shall be measured with an accuracy of ±0,4 kPa.

7.7.7 The analysers shall have a measuring range compatible with the accuracy required to measure the content of the various pollutants and carbon dioxide with an accuracy of ±1 %, regardless of the accuracy of the calibration gases. The overall response time of the analysing circuit shall be less than 1 min.

7.7.8 The cooling air speed shall be measured with an accuracy of ±5 km/h.

7.7.9 The duration of test cycles and the exhaust emissions collection shall be controlled with an accuracy of ±1 s. These times shall be measured with an accuracy of 0,1 s.

7.7.10 The total volume of the diluted exhaust mixture shall be measured with an accuracy of ±2 %.

7.7.11 For the fuel consumption measurement at a constant speed specified in ISO 6460-3, the wind speed on the test road shall be measured with an accuracy of ±5 % to the resolution of 0,1 m/s.

8 Preparing the test

8.1 Engine fuel and lubricants

The specification of test fuel shall be reported. An example of the record form is given in Annex B.

With regard to grade and quantity of oil, the lubrication of the engine shall comply with the manufacturer's recommendation.

8.2 Description of the test motorcycle

The main specifications of the test motorcycle shall be provided in accordance with ISO 6460-2:2014, Annexes A and B, and in ISO 6460-3:2007, Annex B.

8.3 Conditioning/preparation of the test motorcycle

8.3.1 The test motorcycle shall be run in properly in accordance with the manufacturer's requirements.

8.3.2 The test motorcycle shall be adjusted in accordance with the manufacturer's requirements (e.g. tyre pressures, chain tension). If there is any alteration, the full description shall be given in the test report.

© ISO 2022 – All rights reserved

Documents
Document Sharing Hub
Full document details: BS ISO 6460-1:2022

8.3.3 The distribution of the load between the wheels shall be in conformity with the manufacturer's instructions.

8.4 Calibration and adjustment of analysers

8.4.1 Calibration of the analysers

8.4.1.1 Analyser calibration intervals

Each analyser may be calibrated as specified by the instrument manufacturer or at least as often as described in Table 2.

Table 2 — Analyser calibration intervals

Checks	Interval	Criterion
Gas analyser linearization (calibration)	Every 6 months	±2 % of reading
Mid-span for calibration	Every 6 months	±2 %
CO_2/H_2O interference for CO analyser	Monthly	-1 to 3 ppm
NOx converter check	Monthly	> 95 %
CH_4 cutter check	Yearly	98 % of ethane
FID CH_4 response	Yearly	See 8.4.2.1
FID air/fuel flow	At major maintenance	According to the instrument manufacture

8.4.1.2 Analyser calibration procedures

8.4.1.2.1 The analyser linearization curve shall be established by at least five calibration points spaced as uniformly as possible. The nominal concentration of the calibration gas of the highest concentration shall be not less than 80 % of the full scale.

8.4.1.2.2 The calibration gas concentration required may be obtained by means of a gas divider, diluting with purified N_2 or with purified synthetic air.

8.4.1.2.3 The linearization curve shall be calculated by the least-squares method. If the resulting polynomial degree is greater than 3, the number of calibration points shall be at least equal to this polynomial degree plus 2.

8.4.1.2.4 The linearization curve shall not differ by more than ±2 % from the nominal value of each calibration gas.

8.4.1.2.5 From the trace of the linearization curve and the linearization points, it is possible to verify that the calibration has been carried out correctly. The different characteristic parameters of the analyser shall be indicated, particularly:

a) analyser and gas component;

b) range;

c) data of the linearization.

8.4.1.2.6 If it can be shown to the satisfaction of the responsible authority that alternative technologies (e.g. computer, electronically controlled range switch, etc.) can give equivalent accuracy, these alternatives may be used.

© ISO 2022 – All rights reserved
Documents
Document Sharing Hub
Full document details: BS ISO 6460-1:2022

8.4.2 Adjustment of the analysers

8.4.2.1 FID hydrocarbon response check procedure

8.4.2.1.1 Detector response optimisation

The FID shall be adjusted as specified by the instrument manufacturer. Propane in air should be used on the most common operating range.

8.4.2.1.2 Calibration of the THC analyser

The analyser shall be calibrated using propane in air and purified synthetic air. A calibration curve shall be established.

8.4.2.1.3 Response factors of different hydrocarbons and recommended limits

The response factor, R_f, for a particular hydrocarbon compound is the ratio of the FID reading to the gas cylinder concentration, expressed in ppm carbon equivalent. The concentration of the test gas shall be at a level to give a response of approximately 80 % of full-scale deflection, for the operating range. The concentration shall be known to an accuracy of ±2 % in reference to a gravimetric standard expressed in volume. In addition, the gas cylinder shall be pre-conditioned for 24 h at a temperature between 293,15 K and 303,15 K (20 °C and 30 °C).

Response factors shall be determined when introducing an analyser into service and thereafter at major service intervals. The test gases to be used and the recommended response factors are:

— CH_4 and purified air: $1{,}00 < R_{f,CH4} < 1{,}15$

— propylene (C_3H_6) and purified air: $0{,}90 < R_{f,C3H6} < 1{,}10$

— toluene (C_7H_8) and purified air: $0{,}90 < R_{f,C7H8} < 1{,}10$

These are relative to a response factor ($R_{f,C3H8}$) of 1,00 for propane and purified air.

8.4.2.2 NOx converter efficiency test procedure

8.4.2.2.1 Using the test set up as shown in Figure 1 and the procedure described in 8.4.2.2, the efficiency of converters for the conversion of NO_2 into NO shall be tested by means of an ozonator as follows.

8.4.2.2.1.1 The analyser shall be calibrated in the most common operating range following the manufacturer's specifications using zero and calibration gas (the NO content of which shall amount to approximately 80 % of the operating range and the NO_2 concentration of the gas mixture shall be less than 5 % of the NO concentration). The NOx analyser shall be in the NO mode so that the calibration gas does not pass through the converter. The indicated concentration shall be recorded.

8.4.2.2.1.2 Via a T-fitting, oxygen or synthetic air shall be added continuously to the calibration gas flow until the concentration indicated is approximately 10 % less than the indicated calibration concentration given in 8.4.2.2.1.1. The indicated concentration (value *c*) shall be recorded. The ozonator shall be kept deactivated throughout this process.

8.4.2.2.1.3 The ozonator shall now be activated to generate enough ozone to bring the NO concentration down to 20 % (minimum 10 %) of the calibration concentration. The indicated concentration (value *d*) shall be recorded.

© ISO 2022 – All rights reserved

Documents
Document Sharing Hub
Full document details: BS ISO 6460-1:2022

8.4.2.2.1.4 The NOx analyser shall then be switched to the NOx mode, whereby the gas mixture (consisting of NO, NO_2, O_2 and N_2) now passes through the converter. The indicated concentration (value *a*) shall be recorded.

8.4.2.2.1.5 The ozonator shall now be deactivated. The mixture of gases described in 8.4.2.2.1.2 shall pass through the converter into the detector. The indicated concentration (value *b*) shall be recorded.

8.4.2.2.1.6 With the ozonator deactivated, the flow of oxygen or synthetic air shall be shut off. The NO_2 reading of the analyser shall then be no more than 5 % above the value given in 8.4.2.2.1.1.

8.4.2.2.1.7 The efficiency of the NOx converter shall be calculated by Formula (1) using the concentrations *a*, *b*, *c* and d determined in 8.4.2.2.1.2 through 8.4.2.2.1.5 as follows:

$$E = \left(1 + \frac{a-b}{c-d}\right) \times 100 \tag{1}$$

where

E is NOx converter efficiency, in percentage;

a is the concentration obtained in 8.4.2.2.1.4;

b is the concentration obtained in 8.4.2.2.1.5;

c is the concentration obtained in 8.4.2.2.1.2;

d is the concentration obtained in 8.4.2.2.1.3.

The efficiency of the converter shall not be less than 95 %.

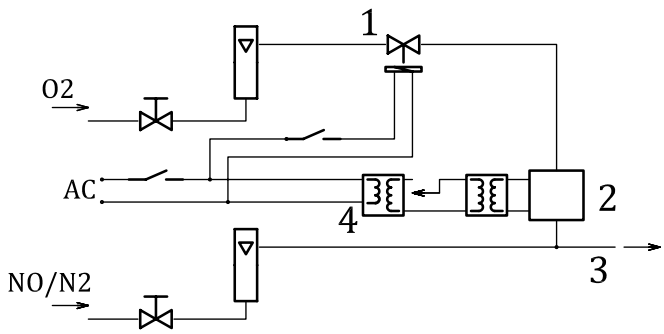

Key

1 solenoid valve
2 ozonator
3 to analyser
4 variac

Figure 1 — NOx converter efficiency test configuration

© ISO 2022 – All rights reserved
Documents
Document Sharing Hub
Full document details: BS ISO 6460-1:2022

8.4.3 Reference gases and accuracy of the mixing device

8.4.3.1 Reference gases

8.4.3.1.1 Pure gases

The following pure gases shall be available, if necessary, for calibration and operation:

— purified nitrogen: (purity: ≤ 1 ppm C1, ≤ 1 ppm CO, ≤ 400 ppm CO_2, ≤ 0,1 ppm NO);

— purified synthetic air: (purity: ≤ 1 ppm C1, ≤ 1 ppm CO, ≤ 400 ppm CO_2, ≤ 0,1 ppm NO); oxygen content between 18 % and 21 % by volume;

— purified oxygen: (purity > 99,5 % by volume O_2);

— purified hydrogen [and mixture containing helium (He) or nitrogen (N_2)]: (purity ≤ 1 ppm C1, ≤ 400 ppm CO_2); hydrogen content between 39 % and 41 % by volume;

— carbon monoxide: (minimum purity 99,5 %);

— propane: (minimum purity 99,5 %).

8.4.3.1.2 Calibration gases

The true concentration of a calibration gas shall be within ±1 % of the stated value or as given in this subclause. Mixtures of gases having the following compositions shall be available with a bulk gas specification according to 8.4.3.1.1:

— C_3H_8 in synthetic air (see 8.4.3.1.1);

— CO in nitrogen;

— CO_2 in nitrogen;

— CH_4 in synthetic air;

— NO in nitrogen (the amount of NO_2 contained in this calibration gas shall not exceed 5 % of the NO content).

8.4.3.2 Accuracy of the mixing device

In the case that a gas divider is used to perform the calibrations, the accuracy of the mixing device shall be such that the concentrations of the diluted calibration gases may be determined to within ±2 %. A calibration curve shall be verified by a mid-span check. A calibration gas with a concentration below 50 % of the analyser range shall be within 2 % of its certified concentration.

9 CVS system check procedure

The CVS system shall be calibrated and checked in accordance with the manufacturer's instruction. The CVS system check procedure is described in Annex G for reference.

© ISO 2022 – All rights reserved

Documents
Document Sharing Hub
Full document details: BS ISO 6460-1:2022