BS ISO 6624-1:2017

BSI Standards Publication

Internal combustion engines — Piston rings

Part 1: Keystone rings made of cast iron

Documents
Document Sharing Hub

Full document details: BS ISO 6624-1:2017

National foreword

This British Standard is the UK implementation of ISO 6624-1:2017. It supersedes BS 5341-7.3.1:1992 which is withdrawn.

The UK participation in its preparation was entrusted to Technical Committee MCE/14/-/10, RIC engines - Cylinders, pistons and rings.

A list of organizations represented on this committee can be obtained on request to its secretary.

This publication does not purport to include all the necessary provisions of a contract. Users are responsible for its correct application.

© The British Standards Institution 2017
Published by BSI Standards Limited 2017

ISBN 978 0 580 89501 2

ICS 43.060.10

Compliance with a British Standard cannot confer immunity from legal obligations.

This British Standard was published under the authority of the Standards Policy and Strategy Committee on 30 June 2017.

Amendments/corrigenda issued since publication

Date	Text affected

Documents
Document Sharing Hub

Full document details: BS ISO 6624-1:2017

INTERNATIONAL STANDARD

ISO 6624-1

Third edition
2017-04

Internal combustion engines — Piston rings —

Part 1: Keystone rings made of cast iron

Moteurs à combustion interne — Segments de piston —

Partie 1: Segments trapézoïdaux en fonte

Reference number
ISO 6624-1:2017(E)

Documents
Document Sharing Hub

© ISO 2017

Full document details: BS ISO 6624-1:2017

COPYRIGHT PROTECTED DOCUMENT

© ISO 2017, Published in Switzerland

All rights reserved. Unless otherwise specified, no part of this publication may be reproduced or utilized otherwise in any form or by any means, electronic or mechanical, including photocopying, or posting on the internet or an intranet, without prior written permission. Permission can be requested from either ISO at the address below or ISO's member body in the country of the requester.

ISO copyright office
Ch. de Blandonnet 8 • CP 401
CH-1214 Vernier, Geneva, Switzerland
Tel. +41 22 749 01 11
Fax +41 22 749 09 47
copyright@iso.org
www.iso.org

© ISO 2017 – All rights reserved

Documents
Document Sharing Hub

Full document details: BS ISO 6624-1:2017

Contents

Page

Foreword ... **iv**
Introduction ... **v**
1 Scope ... **1**
2 Normative reference ... **1**
3 Terms and definitions ... **1**
4 Overview ... **1**
5 Ring types and designation examples ... **1**
5.1 Type T — Straight faced keystone ring 6° ... 1
5.1.1 General features ... 1
5.1.2 Designation ... 2
5.2 Type TB — Symmetrical barrel faced keystone ring 6° ... 2
5.2.1 General features ... 2
5.2.2 Designation ... 4
5.3 Type TBA — Asymmetrical barrel faced keystone ring 6° ... 4
5.3.1 General features ... 4
5.3.2 Designation ... 5
5.4 Type TM — Taper faced keystone ring 6° ... 5
5.4.1 General features ... 5
5.4.2 Designation ... 6
5.5 Type K — Straight faced keystone ring 15° ... 7
5.5.1 General features ... 7
5.5.2 Designation ... 7
5.6 Type KB — Symmetrical barrel faced keystone ring 15° ... 7
5.6.1 General features ... 7
5.6.2 Designation ... 8
5.7 Type KBA — Asymmetrical barrel faced keystone ring 15° ... 8
5.7.1 General features ... 8
5.7.2 Designation ... 9
5.8 Type KM — Taper faced keystone ring 15° ... 9
5.8.1 General features ... 9
5.8.2 Designation ... 10
6 Common features ... **11**
6.1 Type T, TB, TBA, TM, K, KB, KBA, KM rings — Inside chamfered edges (KI) ... 11
6.2 Type T, TB, TBA, TM, K, KB, KBA, KM rings (positive twist type) internal bevel or internal step top side ... 11
6.3 Type TM or KM rings with partly cylindrical machined (LM) or lapped (LP) peripheral surface ... 12
6.4 Type T, TB, TBA, TM, K, KB, KBA, KM rings — Plating/coating configuration ... 13
6.4.1 Uncoated rings ... 13
6.4.2 Chromium plated, PVD coated or spray coated rings ... 14
7 Force factors ... **16**
8 Dimensions ... **16**
Bibliography ... **24**

© ISO 2017 – All rights reserved

Documents
Document Sharing Hub
Full document details: BS ISO 6624-1:2017

Foreword

ISO (the International Organization for Standardization) is a worldwide federation of national standards bodies (ISO member bodies). The work of preparing International Standards is normally carried out through ISO technical committees. Each member body interested in a subject for which a technical committee has been established has the right to be represented on that committee. International organizations, governmental and non-governmental, in liaison with ISO, also take part in the work. ISO collaborates closely with the International Electrotechnical Commission (IEC) on all matters of electrotechnical standardization.

The procedures used to develop this document and those intended for its further maintenance are described in the ISO/IEC Directives, Part 1. In particular the different approval criteria needed for the different types of ISO documents should be noted. This document was drafted in accordance with the editorial rules of the ISO/IEC Directives, Part 2 (see www.iso.org/directives).

Attention is drawn to the possibility that some of the elements of this document may be the subject of patent rights. ISO shall not be held responsible for identifying any or all such patent rights. Details of any patent rights identified during the development of the document will be in the Introduction and/or on the ISO list of patent declarations received (see www.iso.org/patents).

Any trade name used in this document is information given for the convenience of users and does not constitute an endorsement.

For an explanation on the voluntary nature of standards, the meaning of ISO specific terms and expressions related to conformity assessment, as well as information about ISO's adherence to the World Trade Organization (WTO) principles in the Technical Barriers to Trade (TBT) see the following URL: www.iso.org/iso/foreword.html.

This document was prepared by Technical Committee ISO/TC 22, *Road vehicles*, Subcommittee SC 34, *Propulsion, powertrain and powertrain fluids*.

This third edition cancels and replaces the second edition (ISO 6624-1:2001), which has been technically revised.

The main changes compared to the previous edition are as follows:

— PVD coating thickness has been included with a new Table 8;

— updates have been made regarding technology improvements.

© ISO 2017 – All rights reserved
Documents
Document Sharing Hub
Full document details: BS ISO 6624-1:2017

Introduction

ISO 6624 belongs to the series of International Standards dealing with piston rings for reciprocating internal combustion engines. Others are ISO 6621, ISO 6622, ISO 6623, ISO 6625, ISO 6626 and ISO 6627 (see Bibliography for details).

The common features and dimensional tables presented in this document constitute a broad range of variables and, in selecting a particular ring type, the designer must bear in mind the conditions under which it will be required to operate.

It is also essential that the designer refer to the specifications and requirements of ISO 6621-3[4] and ISO 6621-4 before completing a selection.

.

© ISO 2017 – All rights reserved

Documents
Document Sharing Hub
Full document details: BS ISO 6624-1:2017

Documents
Document Sharing Hub

Internal combustion engines — Piston rings —

Part 1: Keystone rings made of cast iron

1 Scope

This document specifies the essential dimensional features of keystone rings made of cast iron, types T, TB, TBA, TM, K, KB, KBA and KM, having diameters from 70 mm up to and including 200 mm, used in reciprocating internal combustion piston engines.

2 Normative reference

The following documents are referred to in the text in such a way that some or all of their content constitutes requirements of this document. For dated references, only the edition cited applies. For undated references, the latest edition of the referenced document (including any amendments) applies.

ISO 6621-4, *Internal combustion engines — Piston rings — Part 4: General specifications*

3 Terms and definitions

No terms and definitions are listed in this document.

ISO and IEC maintain terminological databases for use in standardization at the following addresses:

— IEC Electropedia: available at http://www.electropedia.org/

— ISO Online browsing platform: available at http://www.iso.org/obp

4 Overview

The keystone ring types are specified in Tables 1 to 3 and Figures 1 to 8. Their common features and the dimensions of those features are specified in Tables 4 to 8 and Figures 9 to 16. Tables 9 and 10 give the force factors for the different types of ring, while Table 11 and Table 12 give the dimensions and forces of keystone rings 6° and 15°, respectively.

5 Ring types and designation examples

5.1 Type T — Straight faced keystone ring 6°

5.1.1 General features

See Table 10 for dimensions and forces.

© ISO 2017 – All rights reserved

Documents
Document Sharing Hub
Full document details: BS ISO 6624-1:2017

Dimensions in millimetres

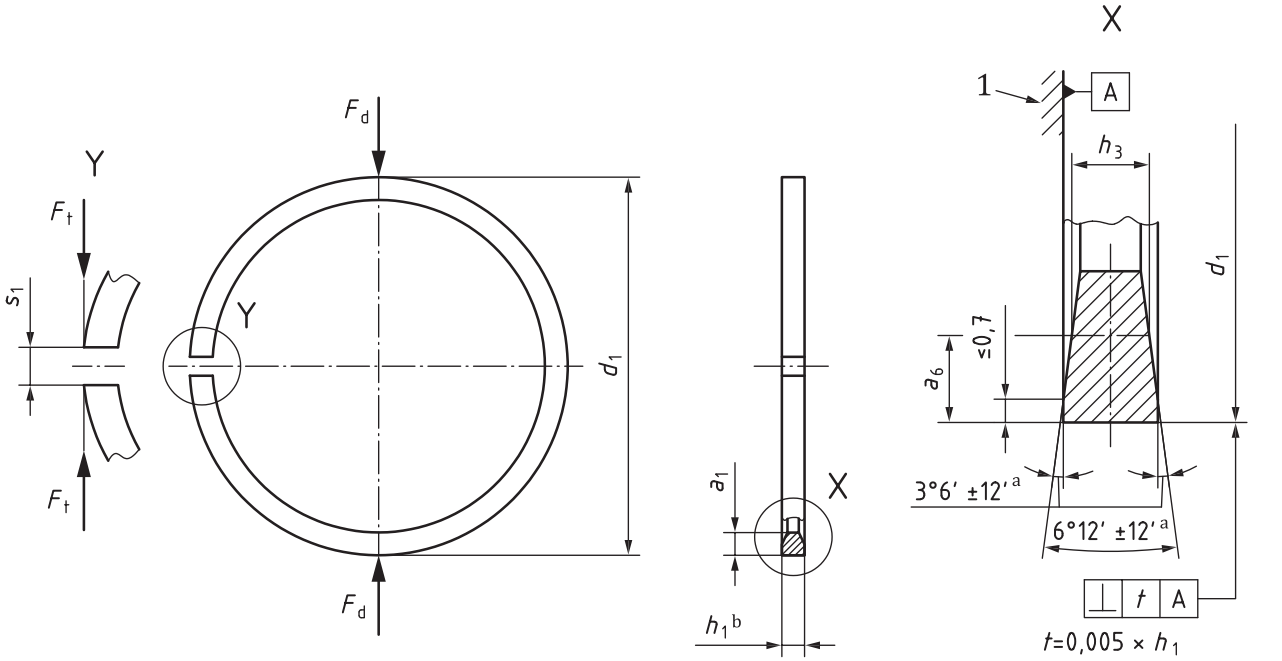

Key

1 reference plane

a Due to manufacturing processing, side angle tolerances are not cumulative.

b Nominal.

Figure 1 — Type T

5.1.2 Designation

EXAMPLE Designation of a piston ring complying with the requirements of ISO 6624–1, being a cast iron, 6° keystone ring with a straight faced peripheral surface (T), of nominal diameter d_1 = 90 mm (90) and nominal width h_1 = 2,5 mm (2,5), made of grey cast iron, subclass 12 (MC12), and having a chromium plated peripheral surface with a minimum thickness of 0,1 mm (CR2). Parameters in parenthesis are used in the ISO ring designation:

Piston ring ISO 6624-1 T-90 × 2,5-MC12/CR2

5.2 Type TB — Symmetrical barrel faced keystone ring 6°

5.2.1 General features

See Table 10 for dimensions and forces.

© ISO 2017 – All rights reserved

Documents
Document Sharing Hub

Full document details: BS ISO 6624-1:2017

Dimensions in millimetres

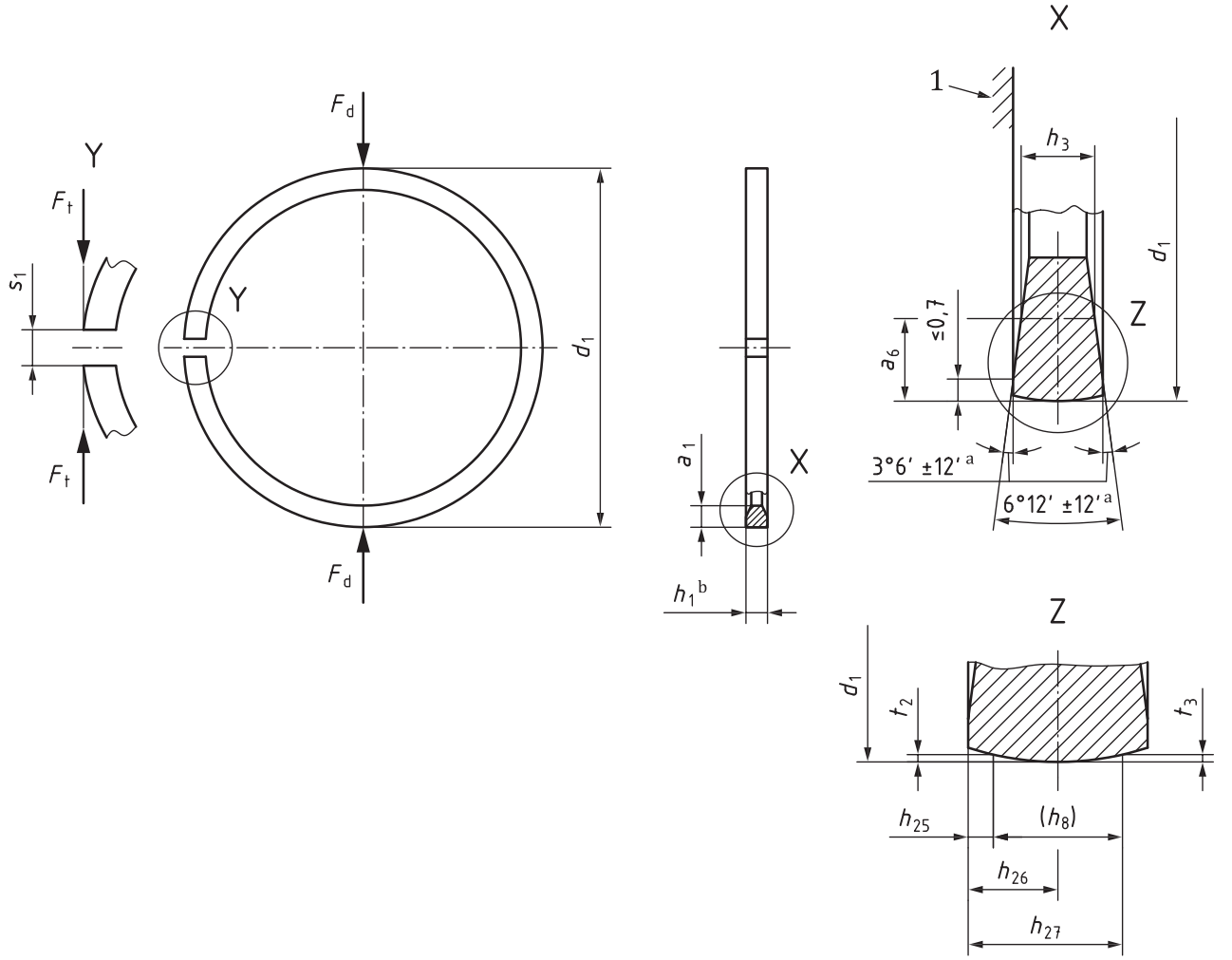

Key

1 reference plane

a Due to manufacturing processing, side angle tolerances are not cumulative.

b Nominal.

Figure 2 — Type TB

Table 1 — Symmetrical barrel dimensions

Dimensions in millimetres

h_1	h_{25}	h_{26}	Tolerance	h_{27}	t_2, t_3	h_8 a
2,0	0,40	1,00	±0,30	1,60	0,003...0,015	1,2
2,5	0,45	1,25	±0,40	2,05		1,6
3,0	0,50	1,50	±0,50	2,50	0,005...0,020	2,0
3,5	0,55	1,75		2,95		2,4
4,0	0,60	2,00	±0,60	3,40	0,005...0,023	2,8
4,5	0,65	2,25		3,85		3,2

a Gauge width h_8, informative only, shall be used only if agreed between manufacturer and customer.

© ISO 2017 – All rights reserved

Documents
Document Sharing Hub
Full document details: BS ISO 6624-1:2017