BS ISO 6626-1:2024

BSI Standards Publication

Internal combustion engines — Piston rings

Part 1: Coil spring loaded oil control rings made of cast iron

Documents
Document Sharing Hub

Full document details: BS ISO 6626-1:2024

National foreword

This British Standard is the UK implementation of ISO 6626-1:2024. It supersedes BS ISO 6626-3:2019, which is withdrawn.

The UK participation in its preparation was entrusted to Technical Committee MCE/22, Engines for road vehicles.

A list of organizations represented on this committee can be obtained on request to its committee manager.

Contractual and legal considerations

This publication has been prepared in good faith, however no representation, warranty, assurance or undertaking (express or implied) is or will be made, and no responsibility or liability is or will be accepted by BSI in relation to the adequacy, accuracy, completeness or reasonableness of this publication. All and any such responsibility and liability is expressly disclaimed to the full extent permitted by the law.

This publication is provided as is, and is to be used at the recipient's own risk.

The recipient is advised to consider seeking professional guidance with respect to its use of this publication.

This publication is not intended to constitute a contract. Users are responsible for its correct application.

© The British Standards Institution 2024
Published by BSI Standards Limited 2024

ISBN 978 0 539 17095 5

ICS 43.060.10

Compliance with a British Standard cannot confer immunity from legal obligations.

This British Standard was published under the authority of the Standards Policy and Strategy Committee on 31 July 2024.

Amendments/corrigenda issued since publication

Date	Text affected

Documents
Document Sharing Hub

Full document details: BS ISO 6626-1:2024

International Standard

ISO 6626-1

First edition
2024-07

Internal combustion engines — Piston rings —

Part 1: Coil spring loaded oil control rings made of cast iron

Moteurs à combustion interne — Segments de piston —

Partie 1: Anneaux de contrôle de l'huile à ressort hélicoïdal en fonte

Reference number
ISO 6626-1:2024(en)

© ISO 2024

Documents
Document Sharing Hub

Full document details: BS ISO 6626-1:2024

COPYRIGHT PROTECTED DOCUMENT

© ISO 2024

All rights reserved. Unless otherwise specified, or required in the context of its implementation, no part of this publication may be reproduced or utilized otherwise in any form or by any means, electronic or mechanical, including photocopying, or posting on the internet or an intranet, without prior written permission. Permission can be requested from either ISO at the address below or ISO's member body in the country of the requester.

ISO copyright office
CP 401 • Ch. de Blandonnet 8
CH-1214 Vernier, Geneva
Phone: +41 22 749 01 11
Email: copyright@iso.org
Website: www.iso.org

Published in Switzerland

Documents
Document Sharing Hub
Full document details: BS ISO 6626-1:2024

Contents

Page

Foreword ... **v**
Introduction ... **vi**
1 Scope ... **1**
2 Normative references ... **1**
3 Terms and definitions ... **1**
4 Overview ... **1**
5 Piston ring types and designation ... **2**
5.1 Types DSF-C, DSF-CNP, SSF, GSF, DSF, DSF-NG and SSF-L — General features and dimensions ... 2
5.2 Type DSF-C — Coil-spring loaded bevelled edge oil control ring, chromium plated and profile ground ... 2
5.2.1 General features and dimensions ... 2
5.2.2 Example designation of a type DSF-C piston ring in accordance with this document ... 3
5.3 Type DSF-CNP — Coil-spring loaded bevelled edge oil control ring, chromium plated not profile ground ... 3
5.3.1 General features and dimensions ... 3
5.3.2 Example designation of a type DSF-CNP piston ring in accordance with this document ... 4
5.4 Type SSF — Coil-spring loaded slotted oil control ring ... 4
5.4.1 General features and dimensions ... 4
5.4.2 Example designation of a type SSF piston ring in accordance with this document ... 5
5.5 Type GSF — Coil-spring loaded double bevelled oil control ring ... 5
5.5.1 General features and dimensions ... 5
5.5.2 Example designation of a type GSF piston ring in accordance with this document ... 6
5.6 Type DSF — Coil-spring loaded bevelled edge oil control ring ... 6
5.6.1 General features and dimensions ... 6
5.6.2 Example designation of a type DSF piston ring in accordance with this document ... 7
5.7 Type DSF-NG — Coil-spring loaded bevelled edge oil control ring (face geometry similar to type DSF-C or type DSF-CNP) ... 7
5.7.1 General features and dimensions ... 7
5.7.2 Example designation of a type DSF-NG piston ring in accordance with this document ... 8
5.8 Type SSF-L — Coil-spring loaded slotted oil control ring with h1 = 4,75 mm (3/16 in) ring width and 0,6 mm nominal land width ... 8
5.8.1 General features and dimensions ... 8
5.8.2 Example designation of a type SSF-L piston ring in accordance with this document ... 9
6 Common features ... **9**
6.1 Oil drainage by slots or holes ... 9
6.1.1 Arrangement of slots ... 9
6.1.2 Slot length ... 11
6.1.3 Arrangement of holes ... 11
6.1.4 Diameter and number of holes ... 11
6.2 Plating thickness — DSF-C and DSF-CNP Coil-spring loaded oil control rings ... 11
6.3 Peripheral edges at gap of chromium plated oil control rings ... 12
6.4 Spring groove and land offsets ... 12
7 Coil springs ... **12**
7.1 Types of coil spring ... 12
7.2 Latch pin and location of small pitch in the coil spring ... 14
7.3 Coil spring excursion (extended gap) ... 14
7.4 Position of coil spring gap and fixing ... 15

© ISO 2024 – All rights reserved

Documents
Document Sharing Hub
Full document details: BS ISO 6626-1:2024

7.5 Material ... 15

8 Tangential force and nominal contact pressure ... 15

8.1 Tangential force, F_t ... 15

8.1.1 Force factors ... 15

8.1.2 General tangential force, F_t ... 16

8.1.3 Actual tangential force, F_t, and tolerance ... 16

8.1.4 Normalized tangential force, F_N ... 16

8.2 Nominal contact pressure, p_o ... 16

9 Dimensions ... 16

Annex A (informative) **Historical classes of nominal contact pressure, p_o ... 78**

Bibliography ... 80

© ISO 2024 – All rights reserved

Documents
Document Sharing Hub

Full document details: BS ISO 6626-1:2024

Foreword

ISO (the International Organization for Standardization) is a worldwide federation of national standards bodies (ISO member bodies). The work of preparing International Standards is normally carried out through ISO technical committees. Each member body interested in a subject for which a technical committee has been established has the right to be represented on that committee. International organizations, governmental and non-governmental, in liaison with ISO, also take part in the work. ISO collaborates closely with the International Electrotechnical Commission (IEC) on all matters of electrotechnical standardization.

The procedures used to develop this document and those intended for its further maintenance are described in the ISO/IEC Directives, Part 1. In particular, the different approval criteria needed for the different types of ISO documents should be noted. This document was drafted in accordance with the editorial rules of the ISO/IEC Directives, Part 2 (see www.iso.org/directives).

ISO draws attention to the possibility that the implementation of this document may involve the use of (a) patent(s). ISO takes no position concerning the evidence, validity or applicability of any claimed patent rights in respect thereof. As of the date of publication of this document, ISO had not received notice of (a) patent(s) which may be required to implement this document. However, implementers are cautioned that this may not represent the latest information, which may be obtained from the patent database available at www.iso.org/patents. ISO shall not be held responsible for identifying any or all such patent rights.

Any trade name used in this document is information given for the convenience of users and does not constitute an endorsement.

For an explanation of the voluntary nature of standards, the meaning of ISO specific terms and expressions related to conformity assessment, as well as information about ISO's adherence to the World Trade Organization (WTO) principles in the Technical Barriers to Trade (TBT), see www.iso.org/iso/foreword.html.

This document was prepared by Technical Committee ISO/TC 22, *Road vehicles*, Subcommittee SC 34, *Propulsion, powertrain and powertrain fluids*.

This first edition cancels and replaces ISO 6626:1989, which has been technically revised.

The main changes are as follows:

— classes of nominal contact pressure were moved to Annex A and the normalized tangential force was introduced;

— verification and correction of figures;

— update of dimension Tables 8 to 25.

A list of all parts in the ISO 6626 series can be found on the ISO website.

Any feedback or questions on this document should be directed to the user's national standards body. A complete listing of these bodies can be found at www.iso.org/members.html.

© ISO 2024 – All rights reserved

Documents
Document Sharing Hub
Full document details: BS ISO 6626-1:2024

Introduction

The ISO 6626 series is one of a set of International Standards dealing with piston rings for reciprocating internal combustion engines. Others are the ISO 6621 series, ISO 6622, ISO 6623, ISO 6624, ISO 6625, the ISO 6626 series, and ISO 6627.

The common features and dimensional tables presented in this document constitute a broad range of variables. When selecting a particular ring type, the designer should bear in mind the conditions under which it will be required to operate.

It is also important that the designer refer to the specifications and requirements of ISO 6621-3 and ISO 6621-4 before completing selection.

© ISO 2024 – All rights reserved

Documents
Document Sharing Hub
Full document details: BS ISO 6626-1:2024

Internal combustion engines — Piston rings —

Part 1: Coil spring loaded oil control rings made of cast iron

1 Scope

This document specifies the essential dimensional features of coil-spring loaded oil control rings made of cast iron, types DSF-C, DSF-CNP, SSF, GSF, DSF, DSF-NG and SSF-L. It is applicable to piston rings in sizes from 60 mm up to and including 200 mm for reciprocating internal combustion engines for road vehicles and other applications.

2 Normative references

The following documents are referred to in the text in such a way that some or all their content constitutes requirements of this document. For dated references, only the edition cited applies. For undated references, the latest edition of the referenced document (including any amendments) applies.

ISO 6621-1, *Internal combustion engines — Piston rings — Part 1: Vocabulary*

ISO 6621-4, *Internal combustion engines — Piston rings — Part 4: General specifications*

3 Terms and definitions

For the purposes of this document, the terms and definitions given in ISO 6621-1 apply.

ISO and IEC maintain terminology databases for use in standardization at the following addresses:

— ISO Online browsing platform: available at https://www.iso.org/obp

— IEC Electropedia: available at https://www.electropedia.org/

4 Overview

Coil-spring loaded oil control ring types are specified in Figures 1 to 8. Their common features and the features' dimensions are specified in Tables 1 to 5 and shown in Figures 9 to 11. Essential features of coil springs are shown in Figures 12 to 16. Table 7 specifies different classes of contact pressure. Tables 8 to 19 give the dimensions and forces of coil-spring loaded oil control rings.

The normal range for axial width of coil-spring loaded oil control rings (3 mm to 8 mm inclusive) is divided into 0,5 mm or 1,0 mm increments. In Tables 20 to 25, dimensions are given for coil-spring loaded oil control rings with an axial width of 4,75 mm (i.e. 3/16 inch) for existing applications in inch units.

For the cast iron part, the recommended material is Class 10 in accordance with ISO 6621-3. For special applications, material Classes 20 to 50 may be used.

Variation from these in face design and spring groove may be used, as recommended by individual manufacturers, in plain or chromed versions.

© ISO 2024 – All rights reserved

Documents
Document Sharing Hub
Full document details: BS ISO 6626-1:2024

5 Piston ring types and designation

5.1 Types DSF-C, DSF-CNP, SSF, GSF, DSF, DSF-NG and SSF-L — General features and dimensions

See Figure 1 and Tables 8 to 25. Figure 1 is applicable to Figures 2 to 8. Figures 2 to 8 show detailed cross sections corresponding to Figure 1.

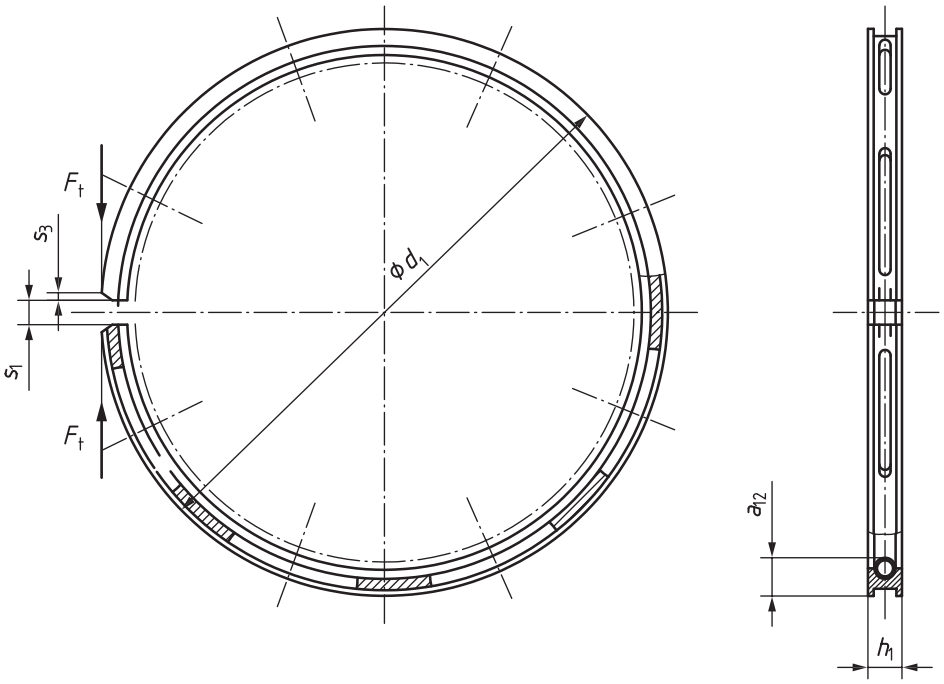

Figure 1 — Types DSF-C, DSF-CNP, SSF, GSF, DSF, DSF-NG and SSF-L

NOTE Gap chamfer s3 is for coated rings only.

5.2 Type DSF-C — Coil-spring loaded bevelled edge oil control ring, chromium plated and profile ground

5.2.1 General features and dimensions

See Figure 2 and Tables 8, 9 and 20.

© ISO 2024 – All rights reserved

Documents
Document Sharing Hub
Full document details: BS ISO 6626-1:2024

Dimensions in millimetres

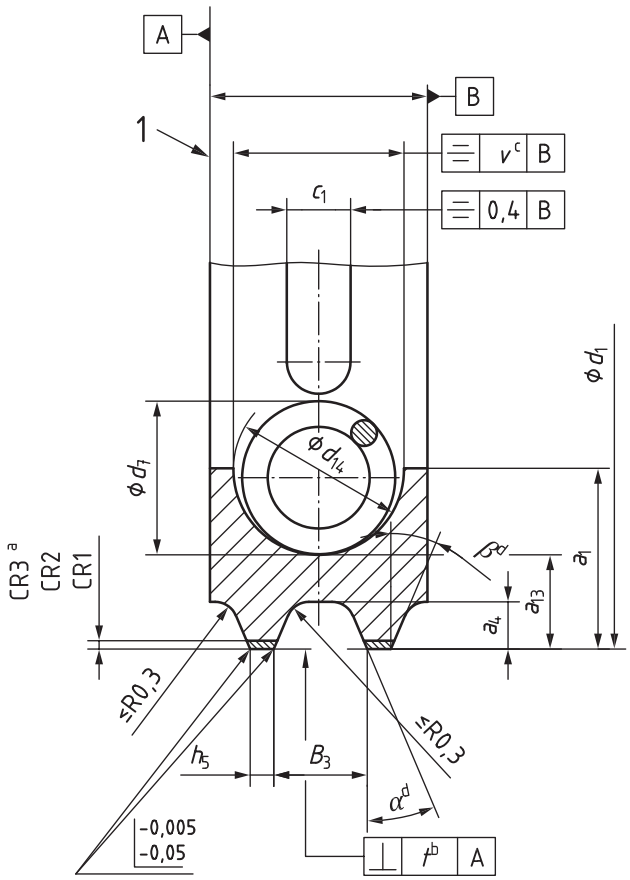

Key

1 reference plane

a See Table 3.

b See Table 4.

c See Table 5.

d Angles α and β to be agreed between manufacturer and customer. Angles can be different (historical value is 35°).

Figure 2 — Type DSF-C

5.2.2 Example designation of a type DSF-C piston ring in accordance with this document

EXAMPLE Coil-spring loaded bevelled edge oil control ring, chromium plated and profile ground (DSF-C), of nominal diameter d_1 = 124 mm (124), nominal ring width h_1 = 3,5 mm (3,5), a land width h_5=0,25 mm (0,25), made of grey cast iron, non-heat treated, material subclass 11 (MC11), having a selected closed gap of 0,20 mm min. (S020), a chromium layer thickness on the lands of 0,15 mm (CR3), phosphated on all cast iron surfaces to depth of 0,002 mm min. (PO), reduced slot length (WK), a coil-spring with reduced heat set (WF), and a variable pitch with coil-diameter d_7 ground (CSE), with tangential force F_t in accordance with the nominal contact pressure of 1,5 N/mm^2 (PN1,5) and the ring marked with the manufacturer's mark (MM). Parameters in parenthesis are used in the ISO ring designation:

Piston ring ISO 6626-1 DSF-C - 124 × 3,5 × 0,25 - MC11 / S020 CR3 PO WK WF CSE PN1,5 MM

5.3 Type DSF-CNP — Coil-spring loaded bevelled edge oil control ring, chromium plated not profile ground

5.3.1 General features and dimensions

See Figure 3 and Tables 10, 11 and 21.

© ISO 2024 – All rights reserved

Documents
Document Sharing Hub
Full document details: BS ISO 6626-1:2024

Dimensions in millimetres

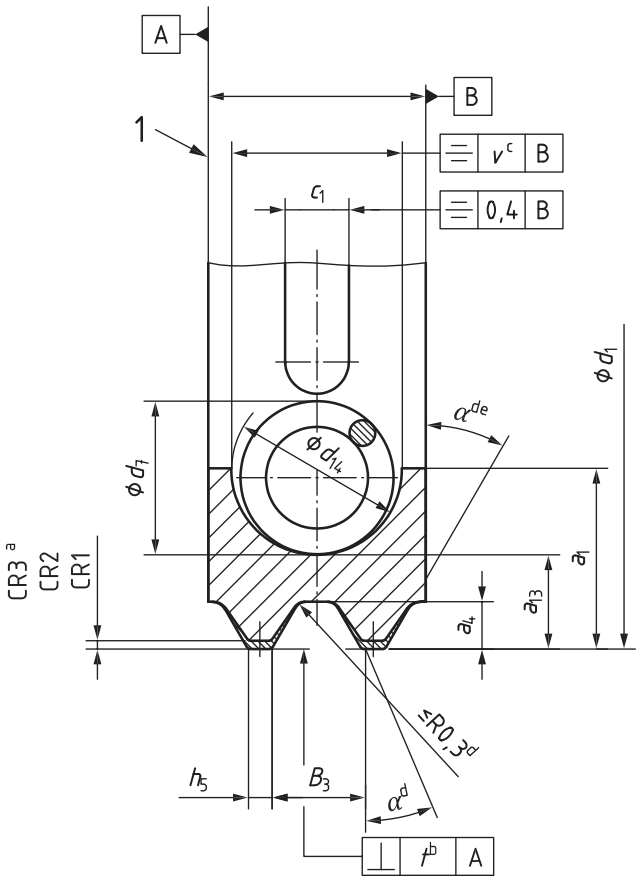

Key

1 reference plane

a See Table 3.

b See Table 4.

c See Table 5.

d Angles α and β to be agreed between manufacturer and customer. Angles can be different (historical value is 35°).

e Before plating.

Figure 3 — Type DSF-CNP

5.3.2 Example designation of a type DSF-CNP piston ring in accordance with this document

EXAMPLE Coil-spring loaded bevelled edge oil control ring, chromium plated, not profile ground (DSF-CNP) of nominal diameter d_1 = 100 mm (100), nominal ring width h_1 = 4,0 mm (4,0), a land width h_5=0,40 mm (0,40), made of grey cast iron, non-heat treated, material subclass 12 (MC12), constant spring pitch (CSN) and tangential force F_t in accordance with the nominal contact pressure of P0=1,0 N/mm^2 (PN1,0). Parameters in parenthesis are used in the ISO ring designation:

Piston ring ISO 6626-1 DSF-CNP - 100 × 4 × 0,40 - MC12 / CSN PN1,0

5.4 Type SSF — Coil-spring loaded slotted oil control ring

5.4.1 General features and dimensions

See Figure 4 and Table 12, 13 and 22.

© ISO 2024 – All rights reserved

Documents
Document Sharing Hub
Full document details: BS ISO 6626-1:2024

Dimensions in millimetres

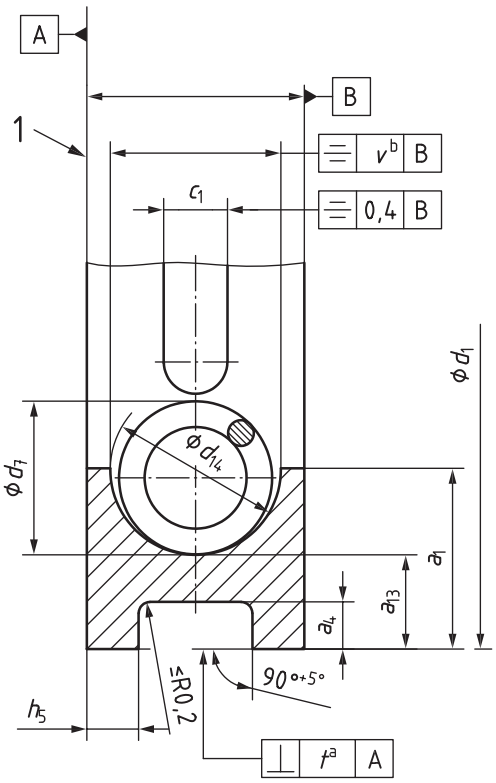

Key

1 reference plane

a See Table 4.

b See Table 5.

Figure 4 — Type SSF

5.4.2 Example designation of a type SSF piston ring in accordance with this document

EXAMPLE Coil-spring loaded slotted oil control ring with rectangular groove (SSF) of nominal diameter d_1 = 80 mm (80), nominal ring width h_1 = 4 mm (4,0), a land width h_5=0,70 mm (0,70),made of grey cast iron, non-heat treated, material subclass 12 (MC12), constant spring pitch (CSN) and tangential force F_t in accordance with the nominal contact pressure of P0=1,0 N/mm^2 (PN1,0). Parameters in parenthesis are used in the ISO ring designation:

Piston ring ISO 6626-1 SSF- 80 × 4,0 × 0,70 - MC12 / CSN PN1,0

5.5 Type GSF — Coil-spring loaded double bevelled oil control ring

5.5.1 General features and dimensions

See Figure 5 and Tables 14, 15 and 23. Top side marking is mandatory and shall be performed in accordance with ISO 6621-4.

© ISO 2024 – All rights reserved

Documents
Document Sharing Hub
Full document details: BS ISO 6626-1:2024

Dimensions in millimetres

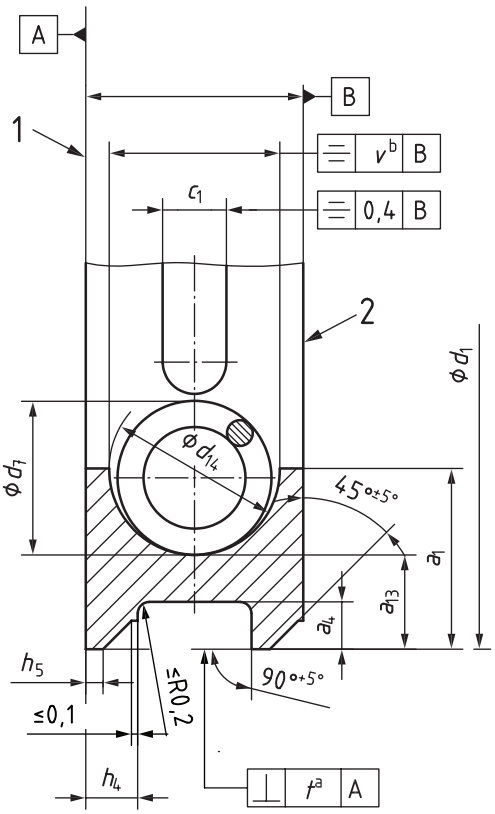

Key

1 reference plane

2 top side identification mark

a See Table 4.

b See Table 5.

Figure 5 — Type GSF

5.5.2 Example designation of a type GSF piston ring in accordance with this document

EXAMPLE Coil-spring loaded double bevelled oil control ring (GSF) of nominal diameter d_1 = 75 mm (75), nominal ring width h_1 = 3,5 mm (3,5), a land width h_5=0,35 mm (0,35), made of grey cast iron, non-heat treated, material subclass 12 (MC12), with constant spring pitch (CSN) and tangential force F_t in accordance with the nominal contact pressure of P0=1,0 N/mm^2 (PN1,0). Parameters in parenthesis are used in the ISO ring designation:

Piston ring ISO 6626-1 GSF- 75 × 3,5 × 0,35 - MC12 / CSN PN1,0

5.6 Type DSF — Coil-spring loaded bevelled edge oil control ring

5.6.1 General features and dimensions

See Figure 6 and Tables 14, 15 and 23.

© ISO 2024 – All rights reserved

Documents
Document Sharing Hub
Full document details: BS ISO 6626-1:2024

Dimensions in millimetres

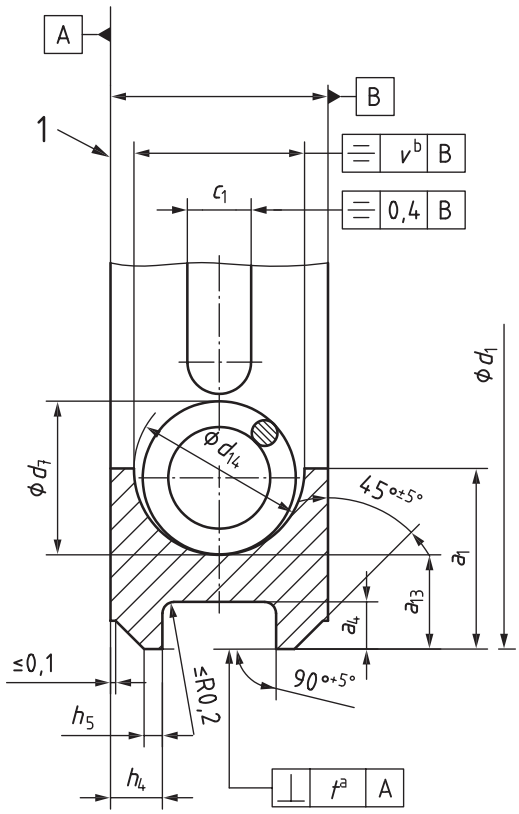

Key

1 reference plane

[a] See Table 4.

[b] See Table 5.

Figure 6 — Type DSF

5.6.2 Example designation of a type DSF piston ring in accordance with this document

EXAMPLE Coil-spring loaded bevelled edge oil control ring (DSF) of nominal diameter d_1 = 90 mm (90), nominal ring width h_1 = 3,5 mm (3,5), a land width h_5=0,35 mm (0,35), made of grey cast iron, non-heat treated, material subclass 12 (MC12), with constant spring pitch (CSN) and tangential force F_t in accordance with the nominal contact pressure of P0=1,0 N/mm^2 (PN1,0). Parameters in parenthesis are used in the ISO ring designation:

Piston ring ISO 6626-1 DSF- 90 × 3,5 × 0,35 - MC12 / CSN PN1,0

5.7 Type DSF-NG — Coil-spring loaded bevelled edge oil control ring (face geometry similar to type DSF-C or type DSF-CNP)

5.7.1 General features and dimensions

See Figure 7 and Tables 16, 17 and 24.

© ISO 2024 – All rights reserved

Documents
Document Sharing Hub
Full document details: BS ISO 6626-1:2024

Dimensions in millimetres

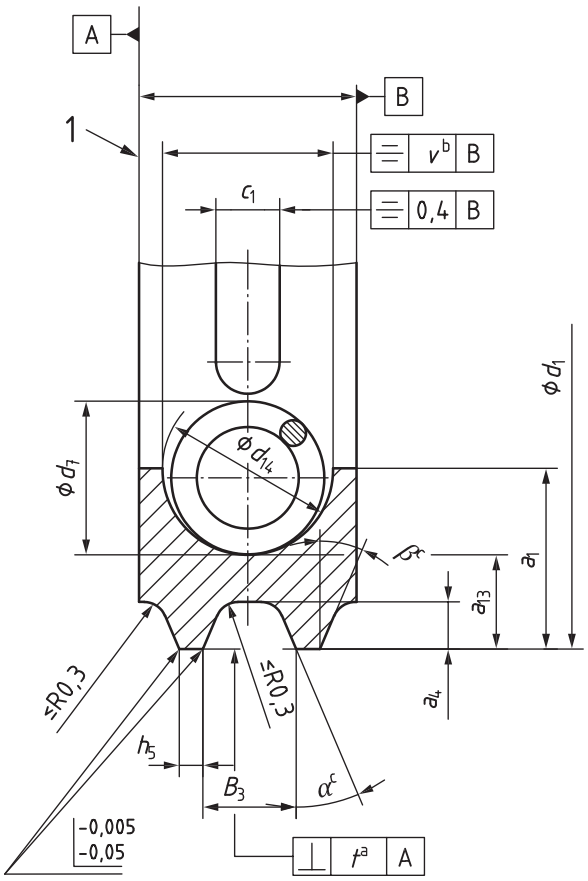

Key

1 reference plane

a See Table 4.

b See Table 5.

c Angles α and β to be agreed between manufacturer and customer. Angles can be different (historical value is 35°).

Figure 7 — Type DSF-NG

5.7.2 Example designation of a type DSF-NG piston ring in accordance with this document

EXAMPLE Coil-spring loaded bevelled edge oil control ring (DSF-NG, face geometry similar to type DSF-C or type DSF-CNP) of nominal diameter d_1 = 140 mm (140), nominal ring width h_1 = 4,5 mm (4,5), a land width h_5=0,40 mm (0,40), made of grey cast iron, non-heat treated, material subclass 12 (MC12), constant spring pitch (CSN) and tangential force F_t in accordance with the nominal contact pressure of P0=1,0 N/mm^2 (PN1,0). Parameters in parenthesis are used in the ISO ring designation:

Piston ring ISO 6626-1 DSF-NG - 140 × 4,5 × 0,40 - MC12 / CSN PN1,0

5.8 Type SSF-L — Coil-spring loaded slotted oil control ring with h1 = 4,75 mm (3/16 in) ring width and 0,6 mm nominal land width

5.8.1 General features and dimensions

See Figure 8 and Tables 18, 19 and 25.

© ISO 2024 – All rights reserved

Documents
Document Sharing Hub
Full document details: BS ISO 6626-1:2024

Dimensions in millimetres

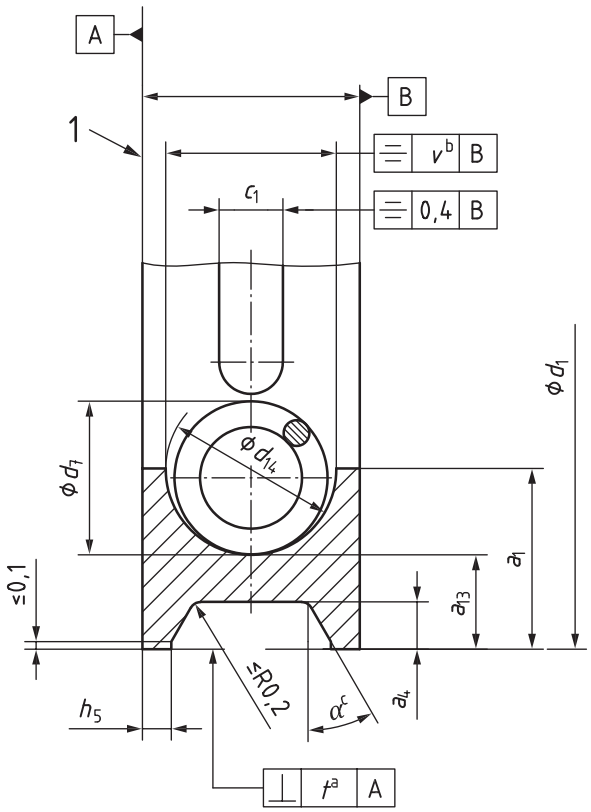

Key

1 reference plane

a See Table 4.

b See Table 5.

c Angles α and β to be agreed between manufacturer and customer. Angles can be different (historical value is 35°).

Figure 8 — Type SSF-L

5.8.2 Example designation of a type SSF-L piston ring in accordance with this document

EXAMPLE Coil-spring loaded slotted oil control ring with rectangular groove at periphery and V-shaped groove beneath (SSF-L) of nominal diameter d_1 = 80 mm (80), nominal ring width h_1 = 4,75 mm (4,75), made of grey cast iron, non-heat treated, material subclass 12 (MC12), constant spring pitch (CSN) and tangential force F_t in accordance with the nominal contact pressure of P0=1,0 N/mm^2 (PN1,0). Parameters in parenthesis are used in the ISO ring designation:

Piston ring ISO 6626-1 SSF-L - 80 × 4,75 - MC12 / CSN PN1,0

6 Common features

6.1 Oil drainage by slots or holes

6.1.1 Arrangement of slots

Figure 9 shows the arrangement of oil drainage slots and Table 1 gives the cutter diameter.

© ISO 2024 – All rights reserved

Documents
Document Sharing Hub
Full document details: BS ISO 6626-1:2024

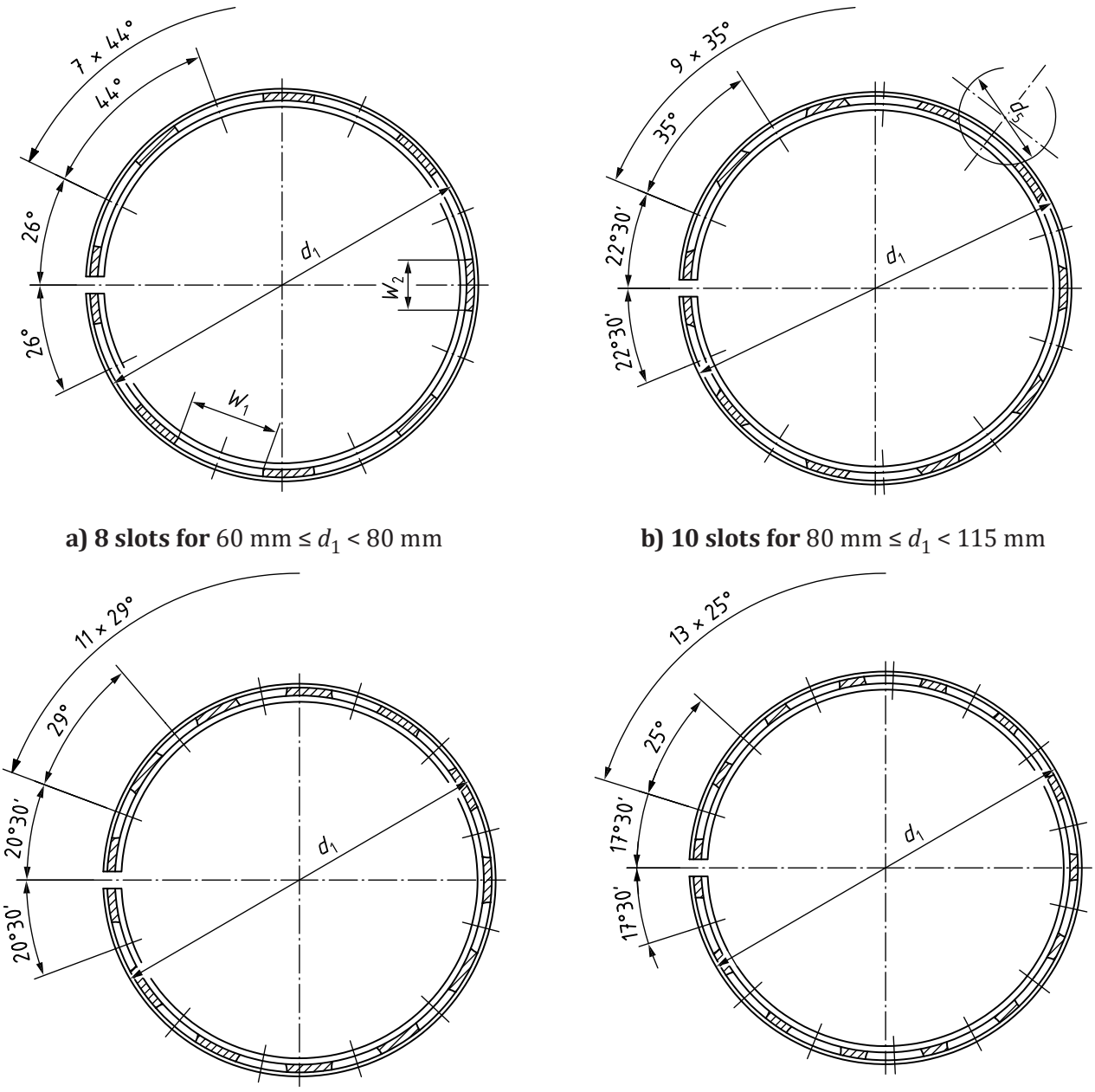

a) 8 slots for 60 mm ≤ d_1 < 80 mm

b) 10 slots for 80 mm ≤ d_1 < 115 mm

c) 12 slots for 115 mm ≤ d_1 < 150 mm

d) 14 slots for 150 mm ≤ d_1 ≤ 200 mm

Figure 9 — Arrangement of slots

Table 1 — Cutter diameter

Dimensions in millimeters

Nominal diameter d_1	**Cutter diameter** d_5 max.
$60 \leq d_1 < 150$	60
$150 \leq d_1 \leq 200$	75

© ISO 2024 – All rights reserved

Documents
Document Sharing Hub
Full document details: BS ISO 6626-1:2024

6.1.2 Slot length

6.1.2.1 Standard slot length

Slot length, w_1, shall be equal to bridge length, w_2.

The maximum difference between w_1 and w_2 shall be 4 mm.

6.1.2.2 Reduced slot length — Code WK

Oil control rings with reduced slot length will retain the same number of slots and the same angular spacing. The maximum difference between w_1 and w_2 for the standard slot length does not apply.

See Table 2.

Table 2 — Reduced slot length

Dimensions in millimeters

d_1	w_1 (range of nominal values)
$60 \leq d_1 < 80$	6 ... 11
$80 \leq d_1 < 115$	8 ... 13
$115 \leq d_1 < 150$	10 ... 15
$150 \leq d_1 \leq 200$	12 ... 18

6.1.3 Arrangement of holes

Arrangement of holes is shown in Figure 10. Deviating arrangements shall be agreed between manufacturer and customer.

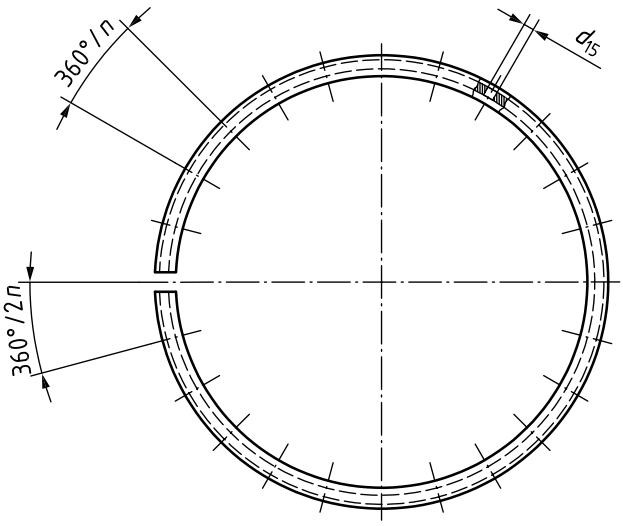

Figure 10 — Arrangement of holes

6.1.4 Diameter and number of holes

The diameter, d_{15}, and number, n, of holes shall be agreed between manufacturer and customer.

6.2 Plating thickness — DSF-C and DSF-CNP Coil-spring loaded oil control rings

See Figure 11 and Table 3.

© ISO 2024 – All rights reserved

Documents
Document Sharing Hub
Full document details: BS ISO 6626-1:2024

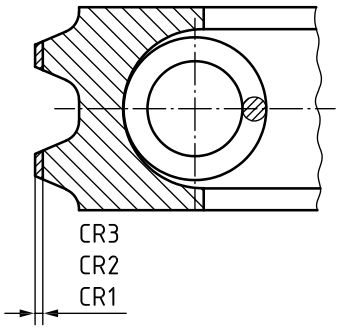

Figure 11 — Plating thickness

Table 3 — Plating thickness

Dimensions in millimeters

Code	Thickness [a] min.
CR1	0,05
CR2	0,10
CR3	0,15
[a] For plating thickness tolerances, see ISO 6621-4.	

6.3 Peripheral edges at gap of chromium plated oil control rings

For features and their dimensions, see ISO 6621-4.

6.4 Spring groove and land offsets

See Figures 2 to 8 and Tables 4 and 5.

Table 4 — Permitted land offset

Dimensions in millimetres

Ring width h_1	t
$3 \leq h_1 < 5$	0,015
$5 \leq h_1 \leq 8$	0,025

Table 5 — Permitted spring groove offset

Dimensions in millimetres

Ring width h_1	v
$h_1 < 3,5$	0,3
$h_1 \geq 3,5$	0,4

7 Coil springs

7.1 Types of coil spring

All values in the dimensional tables of Clause 9 are based on cylindrical coil-springs made of round wire. The three designs shown in Figures 12 to 14 are common. The use of different spring designs may be agreed

© ISO 2024 – All rights reserved

Documents
Document Sharing Hub
Full document details: BS ISO 6626-1:2024

between manufacturer and customer. Changed spring groove configurations and dimensions can then be necessary.

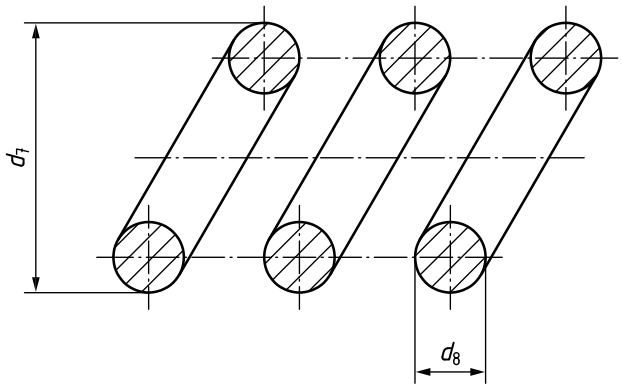

Figure 12 — Type CSN coil spring with constant pitch

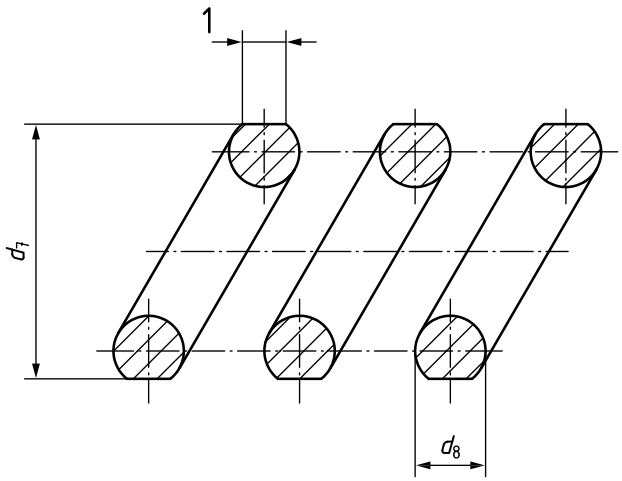

Key

1 approximately 0,8 × d_8

Figure 13 — Type CSG coil spring with constant pitch (coil diameter, d_7, ground)

© ISO 2024 – All rights reserved

Documents
Document Sharing Hub
Full document details: BS ISO 6626-1:2024

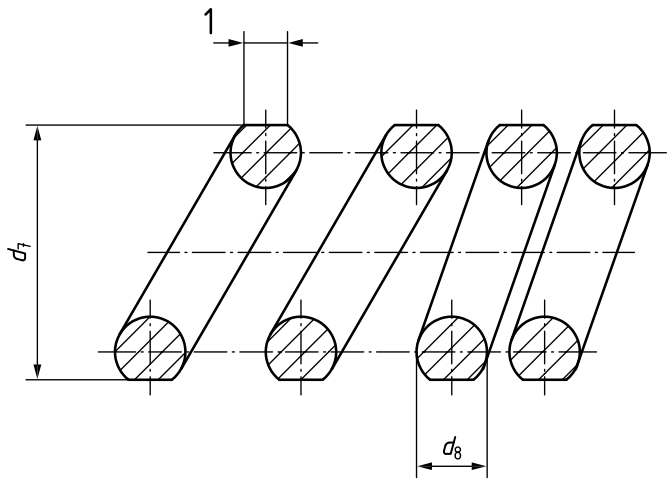

Key

1 approximately 0,8 × d_8

Figure 14 — Type CSE coil spring with variable pitch (coil diameter, d_7, ground)

7.2 Latch pin and location of small pitch in the coil spring

Figure 15 illustrates the location of the small pitch area of the coil spring relative to the spring gap.

Dimensions in millimeters

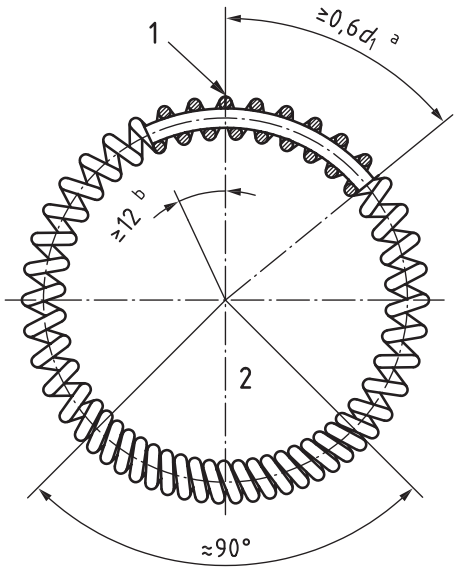

Key

1 spring gap

2 area with small pitch

a Latch pin free length.

b Latch pin fixed length.

Figure 15 — Position of area with small pitch

7.3 Coil spring excursion (extended gap)

Coil spring excursion, f_1, is the distance between the ends of the ring gap, with unstressed ring, measured in the middle of the spring groove (see Figure 16). The maximum value of f_1 is given in Table 6.

© ISO 2024 – All rights reserved

Documents
Document Sharing Hub
Full document details: BS ISO 6626-1:2024

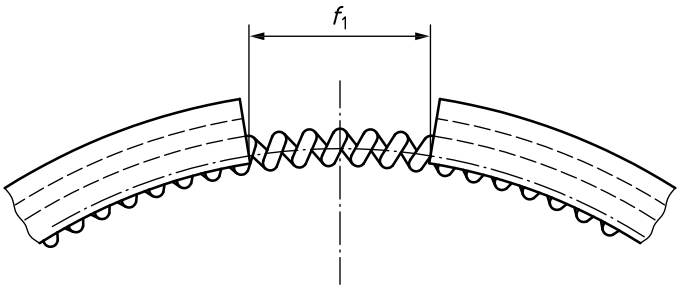

Figure 16 — Coil spring excursion

Table 6 — Coil spring excursion

Dimensions in millimeters

Nominal diameter d_1	f_1 max.
$60 \leq d_1 < 125$	0,13 x d_1
$125 \leq d_1 \leq 200$	0,12 x d_1

7.4 Position of coil spring gap and fixing

The spring gap shall be approximately 180° from the gap and the spring gap ends fixed with a connecting or latch pin.

7.5 Material

Coil springs are made of materials as shown in ISO 6621-3, subclasses MC62 (valve spring wire), MC64 (Chromium-Silicon steel), MC67 (stainless steel) and MC68 (piano wire).

Springs are available with two different heat set resistance levels (loss of tangential force under load and temperature):

— standard heat resistance;

— reduced heat set, code WF.

For test conditions and the permissible loss of tangential forces, see ISO 6621-5.

8 Tangential force and nominal contact pressure

8.1 Tangential force, F_t

The tangential force, F_t, of coil-spring loaded oil control rings is mainly determined by the force of the spring. The cast iron part itself has a very small tangential force due to its low radial wall thickness and the decreased ratio “total free gap/nominal diameter”.

Only the tangential force measurement method can be used because of the flexible design of the cast iron part of the coil-spring loaded oil control rings.

8.1.1 Force factors

Because of the small contribution of the cast iron part in the tangential force, force factors are not necessary when additional features, materials, or both (other than grey cast iron with modulus of elasticity of 100 GN/m$^{2)}$ are being used.

© ISO 2024 – All rights reserved

Documents
Document Sharing Hub
Full document details: BS ISO 6626-1:2024

8.1.2 General tangential force, F_t

The tangential force, F_t, of a spring loaded oil control ring is determined by:

a) nominal diameter, d_1, in millimetres,

b) land width, h_5, in millimeters,

c) required nominal contact pressure, p_o, in N/mm^2, calculated using the formula:

$$F_t = \frac{1}{2} \cdot d_1 \cdot 2 \cdot h_5 \cdot p_0$$

The land width, h_5, depends on the ring type, nominal diameter, and ring width. Recommended values for land width, h_5, are mentioned for every ring type in Clause 9. Other values may be agreed between manufacturer and customer.

8.1.3 Actual tangential force, F_t, and tolerance

The actual tangential force of a spring-loaded oil control ring can be calculated with the tabulated normalized tangential force, F_t/d_1, given in Table 7, according to the required nominal contact pressure, p_0, using the formula:

$$F_t = (F_N) \cdot d_1$$

The tolerance on F_t is the actual value F_t ±20 %. Actual values of tangential force shall be rounded up or down in accordance with ISO 6621-4.

8.1.4 Normalized tangential force, F_N

The normalized tangential forces, $F_N(=F_t/d_1)$, for different nominal contact pressure, p_0, are given in Table 7.

Table 7 — Normalized tangential forces, F_N

Code	P_0 [N/mm^2]	0,2	0,25	0,28	0,30	0,35	0,40	0,50	0,60	0,70	0,80	0,90	1,10	1,30	1,60
PN2,5	**2,5**	0,50	0,63	0,70	0,75	0,88	1,00	1,25	1,50	1,75	2,00	2,25	2,75	3,25	4,00
PN2,0	**2,0**	0,40	0,50	0,56	0,60	0,70	0,80	1,00	1,20	1,40	1,60	1,80	2,20	2,60	3,20
PN1,5	**1,5**	0,30	0,38	0,42	0,45	0,53	0,60	0,75	0,90	1,05	1,20	1,35	1,65	1,95	2,40
PN1,0	**1,0**	0,20	0,25	0,28	0,30	0,35	0,40	0,50	0,60	0,70	0,80	0,90	1,10	1,30	1,60
PN0,5	**0,5**	0,10	0,13	0,14	0,15	0,18	0,20	0,25	0,30	0,35	0,40	0,45	0,55	0,65	0,80

8.2 Nominal contact pressure, p_o

New contact pressure classes are introduced and have replaced the classes of nominal contact pressure used in ISO 6626:1989, which are shown in Annex A for reference.

The nominal contact pressure, p_o, must be chosen to suit the application and requirements regarding oil consumption and friction losses. The range of the usual nominal contact pressure, p_o, is given in Table 7. Varying values may be agreed between manufacturer and customer.

9 Dimensions

The dimensions are shown in Tables 8 to 25. Land spacing B_3 shall be agreed between manufacturer and customer.

© ISO 2024 – All rights reserved

Documents
Document Sharing Hub
Full document details: BS ISO 6626-1:2024

Table 8 — Width dimensions of DSF-C oil control rings

Dimensions in millimeters

Nominal diameter	Radial thickness over coil spring a_{12} Tolerance for h_1 shown in column				Ring width h_1 column					Closed gap	Radial wall thickness a_1 for h_1 shown in column					Land width h_5 for all h_1
d_1	1	2	3	4	1	2	3	4	Tolerance	s_1	1	2	3	4	Tolerance	Recommended range
$60 \leqq d_1 < 65$	–	3,5 0 – 0,25	3,5 0 – 0,25	3,7 0 – 0,25	–	3	3,5	4	−0,010 −0,030 For phosphated PO surface: −0,005 −0,030	0,2 +0,2 0	–	2,4	2,4	2,5	±0,15 within a ring 0,15 max.	0,20–0,4 ±0,07
$65 \leqq d_1 < 70$	–	3,6 0 – 0,25	3,7 0 – 0,25	3,7 0 – 0,25	–	3	3,5	4	−0,010 −0,030 For phosphated PO surface: −0,005 −0,030	0,2 +0,2 0	–	2,45	2,5	2,5	±0,15 within a ring 0,15 max.	0,20–0,4 ±0,07
$70 \leqq d_1 < 75$	–	3,6 0 – 0,25	3,8 0 – 0,25	3,9 0 – 0,25	–	3	3,5	4	−0,010 −0,030 For phosphated PO surface: −0,005 −0,030	0,2 +0,2 0	–	2,55	2,6	2,6	±0,15 within a ring 0,15 max.	0,20–0,4 ±0,07
$75 \leqq d_1 < 80$	–	3,7 0 – 0,25	3,9 0 – 0,25	4 0 – 0,25	–	3	3,5	4	−0,010 −0,030 For phosphated PO surface: −0,005 −0,030	0,25 +0,25 0	–	2,6	2,7	2,7	±0,15 within a ring 0,15 max.	0,20–0,4 ±0,07
$80 \leqq d_1 < 85$	3,8 0 – 0,25	4 0 – 0,25	4,1 0 – 0,25	4,1 0 – 0,25	3	3,5	4	4,5	−0,010 −0,030 For phosphated PO surface: −0,005 −0,030	0,25 +0,25 0	2,7	2,7	2,8	2,8	±0,15 within a ring 0,15 max.	0,25–0,4 ±0,07
$85 \leqq d_1 < 90$	3,9 0 – 0,25	4 0 – 0,25	4,1 0 – 0,25	4,1 0 – 0,25	3	3,5	4	4,5	−0,010 −0,030 For phosphated PO surface: −0,005 −0,030	0,25 +0,25 0	2,8	2,8	2,9	2,9	±0,15 within a ring 0,15 max.	0,25–0,4 ±0,07

NOTE For intermediate sizes (e.g. repair sizes), the radial thickness of the next smaller nominal diameter applies.

© ISO 2024 – All rights reserved

Documents
Document Sharing Hub
Full document details: BS ISO 6626-1:2024

Table 8 *(continued)*

Nominal diameter	Radial thickness over coil spring a_{12} Tolerance for h_1 shown in column				Ring width h_1 column					Closed gap	Radial wall thickness a_1 for h_1 shown in column					Land width h_5 for all h_1
d_1	1	2	3	4	1	2	3	4	Tolerance	s_1	1	2	3	4	Tolerance	Recommended range
$90 \leqq d_1 < 95$	3,9 0 – 0,25	4,1 0 – 0,25	4,2 0 – 0,25	4,2 0 – 0,25	3	3,5	4	4,5	−0,010 −0,030 For phosphated PO surface: −0,005 −0,030	0,3 +0,25 0	2,85	2,9	2,95	3	±0,15 within a ring 0,15 max.	0,25–0,4 ±0,07
$95 \leqq d_1 < 100$	4 0 – 0,25	4,1 0 – 0,25	4,2 0 – 0,25	4,2 0 – 0,25	3	3,5	4	4,5	−0,010 −0,030 For phosphated PO surface: −0,005 −0,030	0,3 +0,25 0	2,95	3	3,05	3,1	±0,15 within a ring 0,15 max.	0,25–0,4 ±0,07
$100 \leqq d_1 < 105$	4,2 0 – 0,25	4,4 0 – 0,25	4,5 0 – 0,25	4,7 0 – 0,25	3,5	4	4,5	5	−0,010 −0,030 For phosphated PO surface: −0,005 −0,030	0,3 +0,25 0	3,05	3,1	3,15	3,2	±0,20 within a ring 0,2 max.	0,25–0,4 ±0,07
$105 \leqq d_1 < 110$	4,2 0 – 0,25	4,4 0 – 0,25	4,5 0 – 0,25	4,7 0 – 0,25	3,5	4	4,5	5	−0,010 −0,030 For phosphated PO surface: −0,005 −0,030	0,3 +0,25 0	3,1	3,15	3,2	3,3	±0,20 within a ring 0,2 max.	0,25–0,4 ±0,07
$110 \leqq d_1 < 115$	4,3 0 – 0,25	4,5 0 – 0,25	4,6 0 – 0,25	4,8 0 – 0,25	3,5	4	4,5	5	−0,010 −0,030 For phosphated PO surface: −0,005 −0,030	0,35 +0,30 0	3,2	3,25	3,3	3,4	±0,20 within a ring 0,2 max.	0,25–0,4 ±0,07
$115 \leqq d_1 < 120$	4,4 0 – 0,25	4,6 0 – 0,25	4,7 0 – 0,25	4,9 0 – 0,25	3,5	4	4,5	5	−0,010 −0,030 For phosphated PO surface: −0,005 −0,030	0,35 +0,30 0	3,3	3,35	3,4	3,5	±0,20 within a ring 0,2 max.	0,25–0,4 ±0,07

NOTE For intermediate sizes (e.g. repair sizes), the radial thickness of the next smaller nominal diameter applies.

© ISO 2024 – All rights reserved

Documents
Document Sharing Hub
Full document details: BS ISO 6626-1:2024

Table 8 *(continued)*

Nominal diameter	Radial thickness over coil spring a_{12} Tolerance for h_1 shown in column				Ring width h_1 column					Closed gap	Radial wall thickness a_1 for h_1 shown in column					Land width h_5 for all h_1
d_1	1	2	3	4	1	2	3	4	Tolerance	s_1	1	2	3	4	Tolerance	Recommended range
$120 \leqq d_1 < 125$	4,4 0 – 0,25	4,6 0 – 0,25	4,8 0 – 0,25	5 0 – 0,25	3,5	4	4,5	5	−0,010 −0,030 For phosphated PO surface: −0,005 −0,030	0,35 +0,30 0	3,4	3,45	3,5	3,6	±0,20 within a ring 0,2 max.	0,25–0,4 ±0,07
$125 \leqq d_1 < 130$	4,7 0 – 0,25	4,9 0 – 0,25	5 0 – 0,25	5,2 0 – 0,25	4	4,5	5	6	−0,010 −0,030 For phosphated PO surface: −0,005 −0,030	0,4 +0,3 0	3,5	3,6	3,7	3,8	±0,15 within a ring 0,15 max.	0,25–0,5 ±0,07
$130 \leqq d_1 < 135$	4,7 0 – 0,25	4,9 0 – 0,25	5,1 0 – 0,25	5,3 0 – 0,25	4	4,5	5	6	−0,010 −0,030 For phosphated PO surface: −0,005 −0,030	0,4 +0,3 0	3,5	3,6	3,7	3,8	±0,15 within a ring 0,15 max.	0,25–0,5 ±0,07
$135 \leqq d_1 < 140$	4,9 0 – 0,25	5,1 0 – 0,25	5,3 0 – 0,25	5,5 0 – 0,25	4	4,5	5	6	−0,010 −0,030 For phosphated PO surface: −0,005 −0,030	0,4 +0,3 0	3,6	3,7	3,8	3,9	±0,20 within a ring 0,2 max.	0,25–0,5 ±0,07
$140 \leqq d_1 < 145$	4,9 0 – 0,25	5,1 0 0,25	5,3 0 – 0,25	5,5 0 – 0,25	4	4,5	5	6	−0,010 −0,030 For phosphated PO surface: −0,005 −0,030	0,4 +0,3 0	3,7	3,8	3,9	4	±0,20 within a ring 0,2 max.	0,25–0,5 ±0,07
$145 \leqq d_1 < 150$	4,9 0 – 0,25	5,1 0 – 0,25	5,3 0 – 0,25	5,5 0 – 0,25	4	4,5	5	6	−0,010 −0,030 For phosphated PO surface: −0,005 −0,030	0,4 +0,3 0	3,8	3,9	4	4,1	±0,20 within a ring 0,2 max.	0,25–0,5 ±0,07

NOTE For intermediate sizes (e.g. repair sizes), the radial thickness of the next smaller nominal diameter applies.

© ISO 2024 – All rights reserved

Documents
Document Sharing Hub
Full document details: BS ISO 6626-1:2024