BS ISO 6626-2:2013

BSI Standards Publication

Internal combustion engines — Piston rings

Part 2: Coil-spring-loaded oil control rings of narrow width made of cast iron

bsi.

...making excellence a habit.™

Document Sharing Hub

National foreword

This British Standard is the UK implementation of ISO 6626-2:2013.

The UK participation in its preparation was entrusted to Technical Committee MCE/14/-/10, RIC engines - Cylinders, pistons and rings.

A list of organizations represented on this committee can be obtained on request to its secretary.

This publication does not purport to include all the necessary provisions of a contract. Users are responsible for its correct application.

© The British Standards Institution 2013. Published by BSI Standards Limited 2013

ISBN 978 0 580 69380 9

ICS 43.060.10

Compliance with a British Standard cannot confer immunity from legal obligations.

This British Standard was published under the authority of the Standards Policy and Strategy Committee on 31 August 2013.

Amendments issued since publication

Date	Text affected

Documents
Document Sharing Hub

Full document details: BS ISO 6626-2:2013

INTERNATIONAL STANDARD

ISO 6626-2

Second edition
2013-08-01

Internal combustion engines — Piston rings —

Part 2: Coil-spring-loaded oil control rings of narrow width made of cast iron

Moteurs à combustion interne — Segments de piston —

Partie 2: Segments racleurs régulateurs d'huile étroits, en fonte, mis en charge par ressort hélicoïdal

Reference number
ISO 6626-2:2013(E)

Documents
Document Sharing Hub

© ISO 2013

Full document details: BS ISO 6626-2:2013

COPYRIGHT PROTECTED DOCUMENT

© ISO 2013

All rights reserved. Unless otherwise specified, no part of this publication may be reproduced or utilized otherwise in any form or by any means, electronic or mechanical, including photocopying, or posting on the internet or an intranet, without prior written permission. Permission can be requested from either ISO at the address below or ISO's member body in the country of the requester.

ISO copyright office
Case postale 56 • CH-1211 Geneva 20
Tel. + 41 22 749 01 11
Fax + 41 22 749 09 47
E-mail copyright@iso.org
Web www.iso.org

Published in Switzerland

© ISO 2013 – All rights reserved

Documents
Document Sharing Hub

Full document details: BS ISO 6626-2:2013

Contents

Page

Foreword ... **iv**
Introduction ... **v**
1 Scope ... **1**
2 Normative references ... **1**
3 Overview ... **1**
4 Piston ring types and designation ... **2**
4.1 DSF-C, SSF, GSF, DSF, SSF-L, DSF-NG and DSF-CNP types ... 2
4.2 Type DSF-C — Coil-spring-loaded bevelled edge oil control ring, chromium-plated, and profile ground ... 2
4.3 Type DSF-CNP — Coil-spring-loaded bevelled-edge oil control ring, chromium-plated not profile ground ... 3
4.4 Type SSF — Coil-spring-loaded slotted oil control ring ... 4
4.5 Type GSF — Coil-spring-loaded double bevelled oil control ring ... 5
4.6 Type DSF — Coil-spring-loaded bevelled edge oil control ring ... 6
4.7 Type DSF-NG — Coil-spring-loaded bevelled-edge oil control ring (face geometry similar to type DSF-C) ... 7
4.8 Type SSF-L — Coil-spring-loaded slotted oil control ring with 0,4 mm nominal land width ... 8
5 Common features ... **9**
5.1 Oil drainage by slots or holes ... 9
5.2 Plating thickness — DSF-C and DSF-CNP (coil-spring-loaded bevelled edge oil control ring, chromium plated) ... 11
5.3 Peripheral edges at gap of chromium plated oil control rings ... 12
6 Coil springs ... **12**
6.1 Types of coil spring ... 12
6.2 Coil spring excursion (extended gap) ... 14
6.3 Position of coil spring gap and fixing ... 14
6.4 Material ... 14
7 Tangential force and nominal contact pressure ... **14**
7.1 Tangential force ... 14
7.2 Force factors ... 14
7.3 Tangential force, F_t ... 15
7.4 Classes of nominal contact pressure, p_o ... 15
8 Dimensions and tangential forces ... **17**
Bibliography ... **36**

© ISO 2013 – All rights reserved

Documents
Document Sharing Hub
Full document details: BS ISO 6626-2:2013

Foreword

ISO (the International Organization for Standardization) is a worldwide federation of national standards bodies (ISO member bodies). The work of preparing International Standards is normally carried out through ISO technical committees. Each member body interested in a subject for which a technical committee has been established has the right to be represented on that committee. International organizations, governmental and non-governmental, in liaison with ISO, also take part in the work. ISO collaborates closely with the International Electrotechnical Commission (IEC) on all matters of electrotechnical standardization.

The procedures used to develop this document and those intended for its further maintenance are described in the ISO/IEC Directives, Part 1. In particular the different approval criteria needed for the different types of ISO documents should be noted. This document was drafted in accordance with the editorial rules of the ISO/IEC Directives, Part 2. www.iso.org/directives

Attention is drawn to the possibility that some of the elements of this document may be the subject of patent rights. ISO shall not be held responsible for identifying any or all such patent rights. Details of any patent rights identified during the development of the document will be in the Introduction and/or on the ISO list of patent declarations received. www.iso.org/patents

Any trade name used in this document is information given for the convenience of users and does not constitute an endorsement.

The committee responsible for this document is ISO/TC 22, *Road vehicles*.

This second edition cancels and replaces the first edition (ISO 6626-2:2003), which has been technically revised.

ISO 6626 consists of the following parts, under the general title *Internal combustion engines — Piston rings*:

— *Part 2: Coil-spring-loaded oil control rings of narrow width made of cast iron*

— *Part 3: Coil-spring-loaded oil control rings made of steel*

ISO 6626:1989 (*Internal combustion engines — Piston rings — Coil-spring-loaded oil control rings*) is to be withdrawn and replaced with a part 1 (i.e. a revision) at a later date.

© ISO 2013 – All rights reserved
Documents
Document Sharing Hub
Full document details: BS ISO 6626-2:2013

Introduction

ISO 6626 (all parts) is one of a series of International Standards dealing with piston rings for reciprocating internal combustion engines. The others are ISO 6621 (all parts), ISO 6622 (all parts),[2] ISO 6623,[3] ISO 6624 (all parts),[4] ISO 6625[5] and ISO 6627.[6]

© ISO 2013 – All rights reserved

Documents
Document Sharing Hub
Full document details: BS ISO 6626-2:2013

Documents
Document Sharing Hub

Internal combustion engines — Piston rings —

Part 2: Coil-spring-loaded oil control rings of narrow width made of cast iron

1 Scope

This part of ISO 6626 specifies the essential dimensional features of coil-spring-loaded oil control rings made of cast iron, types DSF-C, SSF, GSF, DSF, SSF-L, DSF-NG and DSF-CNP. It is applicable to those piston rings in sizes 60 mm to 110 mm, inclusive, for reciprocating internal combustion engines for road vehicles and other applications.

2 Normative references

The following documents, in whole or in part, are normatively referenced in this document and are indispensable to its application. For dated references, only the edition cited applies. For undated references, the latest edition of the referenced document (including any amendments) applies.

ISO 6621-2, *Internal combustion engines — Piston rings — Part 2: Inspection measuring principles*

ISO 6621-3, *Internal combustion engines — Piston rings — Part 3: Material specifications*

ISO 6621-4, *Internal combustion engines — Piston rings — Part 4: General specifications*

ISO 6621-5, *Internal combustion engines — Piston rings — Part 5: Quality requirements*

3 Overview

The coil-spring-loaded oil control ring types are specified in Figures 1 to 8. Their common features and the dimensions of the features are specified in Tables 1 and 2 and shown in Figures 9 to 11. Essential features of coil-springs are shown in Figures 12 to 16. Table 3 specifies different classes of contact pressure. Tables 4 to 9 give the dimensions and forces of coil-spring-loaded oil control rings.

The common features and dimensional tables presented in this part of ISO 6626 constitute a broad range of variables and, in selecting a particular ring type, the designer shall bear in mind the conditions under which it will be required to operate.

It is also essential that the designer refer to the specifications and requirements of ISO 6621-3 and ISO 6621-4 before completing a selection.

For the cast iron part, the recommended material is class 10 and shall be in accordance with ISO 6621-3. For special applications, material classes 20 to 50 may be used.

Variation from these in face design and spring groove may be used, as recommended by individual manufacturers, in plain or chromed versions.

© ISO 2013 – All rights reserved

Documents
Document Sharing Hub

Full document details: BS ISO 6626-2:2013

4 Piston ring types and designation

4.1 DSF-C, SSF, GSF, DSF, SSF-L, DSF-NG and DSF-CNP types

4.1.1 General features and dimensions

See Figure 1 and Tables 4, 5, 6, 7, 8 and 9.

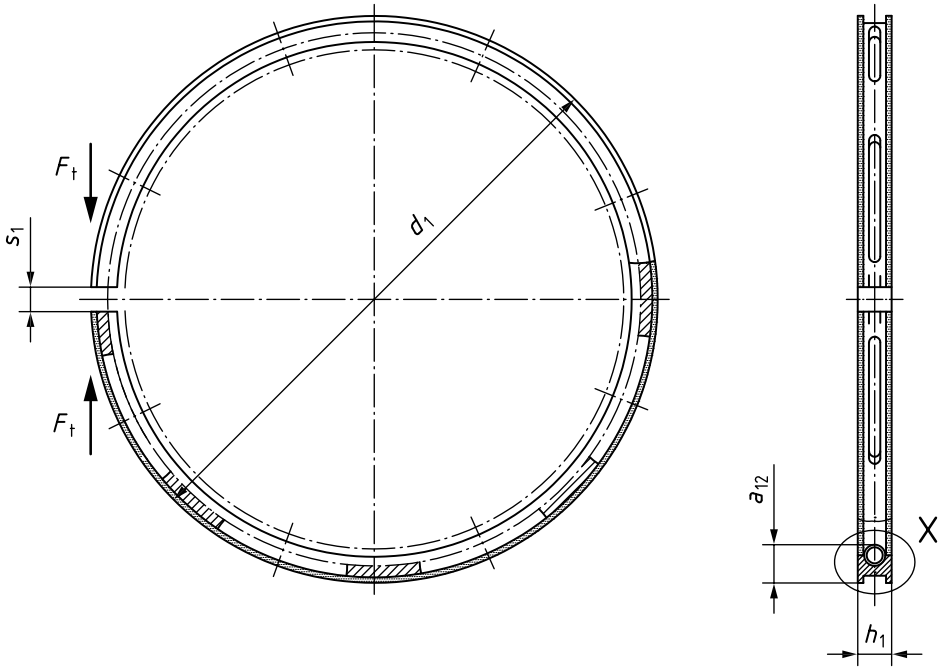

Figure 1 — Types DSF-C, SSF, GSF, DSF, SSF-L, DSF-NG and DSF-CNP

4.2 Type DSF-C — Coil-spring-loaded bevelled edge oil control ring, chromium-plated, and profile ground

4.2.1 General features and dimensions

See Figure 2 and Table 4.

© ISO 2013 – All rights reserved
Documents
Document Sharing Hub
Full document details: BS ISO 6626-2:2013

Dimensions in millimetres

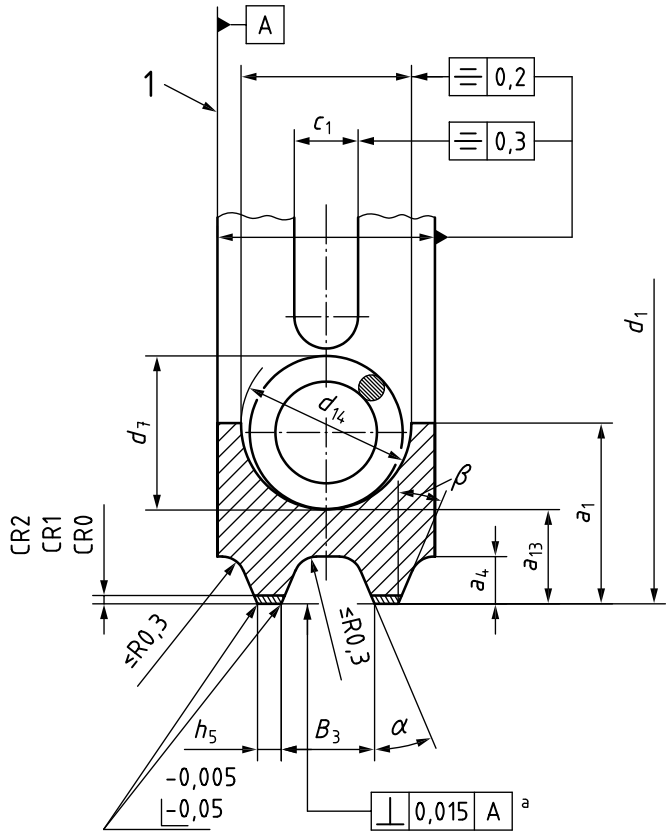

Key

1 reference plane

a In accordance with ISO 6621-2, land offset

Figure 2 — Type DSF-C

4.2.2 Designation of a type DSF-C piston ring in accordance with this part of ISO 6626

EXAMPLE A coil-spring-loaded bevelled edge oil control ring, chromium plated and profile ground (DSF-C), of nominal diameter d_1 = 80 mm (80), nominal ring width h_1 = 2,5 mm (2,5), made of grey cast iron, non-heat treated, material subclass 11 (MC11), having a selected closed gap of 0,20 mm min. (S020), a chromium layer thickness on the lands of 0,10 mm (CR2), reduced slot length (WK), a coil spring with reduced heat set (WF), and a variable pitch with coil diameter d_7 ground (CSE), with tangential force F_t in accordance with the medium nominal contact pressure class (PNM) and the ring marked with the manufacturer's mark (MM) is designated as follows. Parameters in parentheses are used in the ISO ring designation:

Piston ring ISO 6626-2 DSF-C - 80 × 2,5 - MC11/S020 CR2 WK WF CSE PNM MM

4.3 Type DSF-CNP — Coil-spring-loaded bevelled-edge oil control ring, chromium-plated not profile ground

4.3.1 General features and dimensions

See Figure 3 and Tables 5.

© ISO 2013 – All rights reserved

Documents
Document Sharing Hub
Full document details: BS ISO 6626-2:2013

Dimensions in millimetres

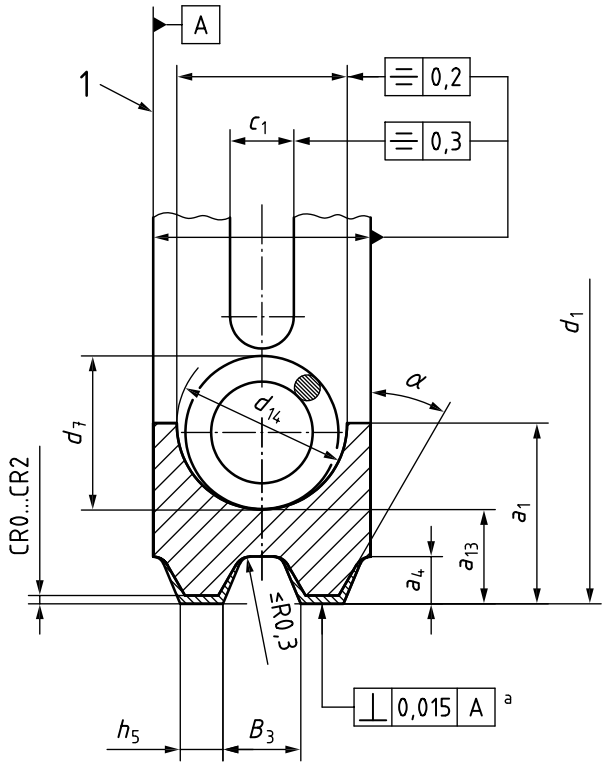

Key

1 reference plane

a In accordance with ISO 6621-2, land offset

Figure 3 — Type DSF-CNP

4.3.2 Designation of a type DSF-CNP piston ring in accordance with this part of ISO 6626

EXAMPLE A coil-spring-loaded slotted oil control ring (DSF-CNP) of nominal diameter d_1 = 100 mm (100), nominal ring width h_1 = 2,0 mm (2,0), made of grey cast iron, non-heat treated, material subclass 12 (MC12), constant spring pitch (CSN) and tangential force F_t in accordance with the low nominal contact pressure class (PNL) is designated as follows. Parameters in parentheses are used in the ISO ring designation:

Piston ring ISO 6626-2 DSF-CNP 100 × 2 - MC12/CSN PNL

4.4 Type SSF — Coil-spring-loaded slotted oil control ring

4.4.1 General features and dimensions

See Figure 4 and Table 6.

© ISO 2013 – All rights reserved
Documents
Document Sharing Hub
Full document details: BS ISO 6626-2:2013

Dimensions in millimetres

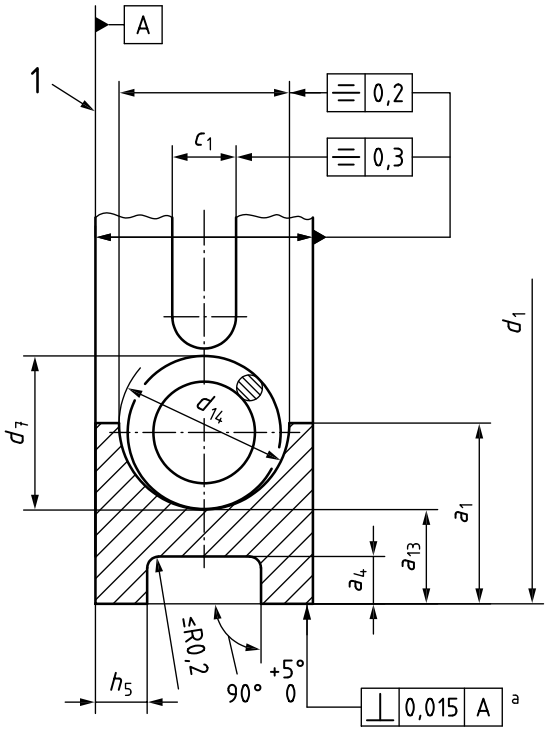

Key

1 reference plane

a In accordance with ISO 6621-2, land offset

Figure 4 — Type SSF

4.4.2 Designation of a type SSF piston ring in accordance with this part of ISO 6626

EXAMPLE A coil-spring-loaded slotted oil control ring (SSF) of nominal diameter d_1 = 80 mm (80), nominal ring width h_1 = 2,5 mm (2,5), made of grey cast iron, non-heat treated, material subclass 12 (MC12), constant spring pitch (CSN) and tangential force F_t in accordance with the low nominal contact pressure class (PNL) is designated as follows. Parameters in parentheses are used in the ISO ring designation:

Piston ring ISO 6626-2 SSF- 80 × 2,5 - MC12/CSN PNL

4.5 Type GSF — Coil-spring-loaded double bevelled oil control ring

4.5.1 General features and dimensions

See Figure 5 and Table 7. Top-side marking is mandatory in accordance with ISO 6621-4.

© ISO 2013 – All rights reserved

Documents
Document Sharing Hub
Full document details: BS ISO 6626-2:2013

Dimensions in millimetres

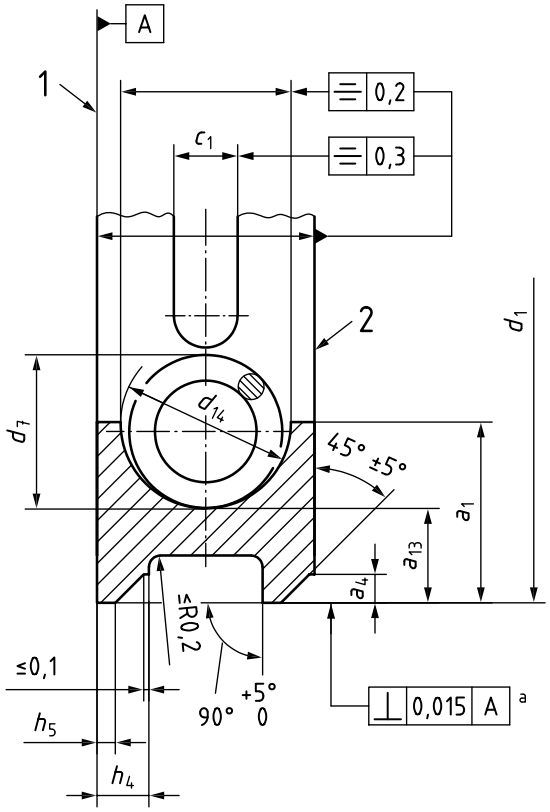

Key

1 reference plane

2 top side identification mark

a In accordance with ISO 6621-2, land offset

Figure 5 — Type GSF

4.5.2 Designation of a type GSF piston ring in accordance with this part of ISO 6626

EXAMPLE A coil-spring-loaded double bevelled oil control ring (GSF) of nominal diameter d_1 = 75 mm (75), nominal ring width h_1 = 2,5 mm (2,5), made of grey cast iron, non-heat treated, material subclass 12 (MC12), with constant spring pitch (CSN) and tangential force F_t in accordance with the low nominal contact pressure class (PNL) is designated as follows. Parameters in parentheses are used in the ISO ring designation:

Piston ring ISO 6626-2 GSF- 75 × 2,5 - MC12/CSN PNL

4.6 Type DSF — Coil-spring-loaded bevelled edge oil control ring

4.6.1 General features and dimensions

See Figure 6 and Table 7.

© ISO 2013 – All rights reserved
Documents
Document Sharing Hub
Full document details: BS ISO 6626-2:2013

Dimensions in millimetres

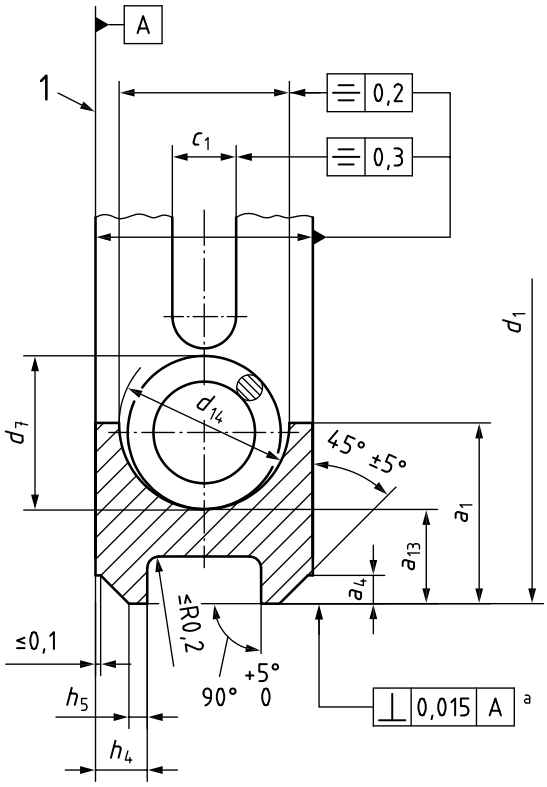

Key

1 reference plane

a In accordance with ISO 6621-2, land offset

Figure 6 — Type DSF

4.6.2 Designation of a type DSF piston ring in accordance with this part of ISO 6626

EXAMPLE A coil-spring-loaded double bevelled oil control ring (DSF) of nominal diameter d_1 = 90 mm (90), nominal ring width h_1 = 2,5 mm (2,5), made of grey cast iron, non-heat treated, material subclass 12 (MC12), with constant spring pitch (CSN) and tangential force F_t in accordance with the reduced nominal contact pressure class (PNR) is designated as follows. Parameters in parentheses are used in the ISO ring designation:

Piston ring ISO 6626-2 DSF- 90 × 2,5 - MC12/CSN PNR

4.7 Type DSF-NG — Coil-spring-loaded bevelled-edge oil control ring (face geometry similar to type DSF-C)

4.7.1 General features and dimensions

See Figure 7 and Table 8.

© ISO 2013 – All rights reserved

Documents
Document Sharing Hub
Full document details: BS ISO 6626-2:2013