BS ISO 6626-2:2024

BSI Standards Publication

Internal combustion engines — Piston rings

Part 2: Coil-spring-loaded oil control rings of narrow width made of cast iron

Documents
Document Sharing Hub

Full document details: BS ISO 6626-2:2024

National foreword

This British Standard is the UK implementation of ISO 6626-2:2024. It supersedes BS ISO 6626-2:2013, which is withdrawn.

The UK participation in its preparation was entrusted to Technical Committee MCE/22, Engines for road vehicles.

A list of organizations represented on this committee can be obtained on request to its committee manager.

Contractual and legal considerations

This publication has been prepared in good faith, however no representation, warranty, assurance or undertaking (express or implied) is or will be made, and no responsibility or liability is or will be accepted by BSI in relation to the adequacy, accuracy, completeness or reasonableness of this publication. All and any such responsibility and liability is expressly disclaimed to the full extent permitted by the law.

This publication is provided as is, and is to be used at the recipient's own risk.

The recipient is advised to consider seeking professional guidance with respect to its use of this publication.

This publication is not intended to constitute a contract. Users are responsible for its correct application.

© The British Standards Institution 2024
Published by BSI Standards Limited 2024

ISBN 978 0 539 17096 2

ICS 43.060.10

Compliance with a British Standard cannot confer immunity from legal obligations.

This British Standard was published under the authority of the Standards Policy and Strategy Committee on 31 July 2024.

Amendments/corrigenda issued since publication

Date	Text affected

Documents
Document Sharing Hub

Full document details: BS ISO 6626-2:2024

International Standard

ISO 6626-2

Third edition
2024-07

Internal combustion engines — Piston rings —

Part 2: Coil-spring-loaded oil control rings of narrow width made of cast iron

Moteurs à combustion interne — Segments de piston —

Partie 2: Segments racleurs régulateurs d'huile étroits, en fonte, mis en charge par ressort hélicoïdal

Reference number
ISO 6626-2:2024(en)

© ISO 2024

Documents
Document Sharing Hub

Full document details: BS ISO 6626-2:2024

COPYRIGHT PROTECTED DOCUMENT

© ISO 2024

All rights reserved. Unless otherwise specified, or required in the context of its implementation, no part of this publication may be reproduced or utilized otherwise in any form or by any means, electronic or mechanical, including photocopying, or posting on the internet or an intranet, without prior written permission. Permission can be requested from either ISO at the address below or ISO's member body in the country of the requester.

ISO copyright office
CP 401 • Ch. de Blandonnet 8
CH-1214 Vernier, Geneva
Phone: +41 22 749 01 11
Email: copyright@iso.org
Website: www.iso.org

Published in Switzerland

Documents
Document Sharing Hub
Full document details: BS ISO 6626-2:2024

Contents

Page

Foreword ... **v**
Introduction ... **vi**
1 Scope ... **1**
2 Normative references ... **1**
3 Terms and definitions ... **1**
4 Overview ... **1**
5 Piston ring types and designation ... **2**
5.1 Types DFS-C, DFS-CNP, SSF, GSF, DSF, DSF-NG, and SSF-L — General features and dimensions ... 2
5.2 Type DSF-C — Coil-spring loaded bevelled edge oil control ring, chromium plated and profile ground ... 2
5.2.1 General features and dimensions ... 2
5.2.2 Designation of a Type DSF-C piston ring in accordance with ISO 6626-2 ... 3
5.3 Type DSF-CNP — Coil-spring loaded bevelled edge oil control ring, chromium plated not profile ground ... 4
5.3.1 General features and dimensions ... 4
5.3.2 Designation of a Type DSF-CNP piston ring in accordance with ISO 6626-2 ... 4
5.4 Type SSF — Coil-spring loaded slotted oil control ring with rectangular groove ... 5
5.4.1 General features and dimensions ... 5
5.4.2 Designation of a Type SSF piston ring in accordance with ISO 6626-2 ... 5
5.5 Type GSF — Coil-spring loaded double bevelled oil control ring ... 5
5.5.1 General features and dimensions ... 5
5.5.2 Designation of a Type GSF piston ring in accordance with ISO 6626-2 ... 6
5.6 Type DSF — Coil-spring loaded bevelled edge oil control ring ... 6
5.6.1 General features and dimensions ... 6
5.6.2 Designation of a Type DSF piston ring in accordance with ISO 6626-2 ... 7
5.7 Type DSF-NG — Coil-spring loaded bevelled edge oil control ring (face geometry similar to type DSF-C or type DSF-CNP) ... 7
5.7.1 General features and dimensions ... 7
5.7.2 Designation of a Type DSF-NG piston ring in accordance with ISO 6626-2 ... 8
5.8 Type SSF-L — Coil-spring loaded slotted oil control ring with rectangular groove at periphery and V-shaped groove beneath ... 8
5.8.1 General features and dimensions ... 8
5.8.2 Designation of a Type SSF-L piston ring in accordance with ISO 6626-2 ... 9
6 Common features ... **9**
6.1 Oil drainage by slots or holes ... 9
6.1.1 Arrangement of slots ... 9
6.1.2 Slot length ... 11
6.1.3 Arrangement of holes ... 11
6.1.4 Diameter and number of holes ... 11
6.2 Plating thickness — DSF-C and DSF-CNP (coil-spring loaded bevelled edge oil control ring, chromium plated) ... 11
6.3 Peripheral edges at gap of chromium plated oil control rings ... 12
6.4 Spring groove, slot, and land offsets ... 12
7 Coil springs ... **12**
7.1 Types of coil spring ... 12
7.2 Latch pin and location of small pitch in the coil spring ... 14
7.3 Coil spring excursion (extended gap) ... 14
7.4 Position of coil spring gap and fixing ... 15
7.5 Material ... 15
8 Tangential force and nominal contact pressure ... **15**
8.1 Tangential force, F_t ... 15

© ISO 2024 – All rights reserved

Documents
Document Sharing Hub
Full document details: BS ISO 6626-2:2024

8.1.1 Force factors ... 15
8.1.2 General tangential force, F_t ... 15
8.1.3 Actual tangential force, F_t, and tolerance ... 16
8.1.4 Normalized tangential force, F_N ... 16
8.2 Nominal contact pressure, p_0 ... 16
9 Dimensions ... 16
Bibliography ... 31

© ISO 2024 – All rights reserved

Documents
Document Sharing Hub
Full document details: BS ISO 6626-2:2024

Foreword

ISO (the International Organization for Standardization) is a worldwide federation of national standards bodies (ISO member bodies). The work of preparing International Standards is normally carried out through ISO technical committees. Each member body interested in a subject for which a technical committee has been established has the right to be represented on that committee. International organizations, governmental and non-governmental, in liaison with ISO, also take part in the work. ISO collaborates closely with the International Electrotechnical Commission (IEC) on all matters of electrotechnical standardization.

The procedures used to develop this document and those intended for its further maintenance are described in the ISO/IEC Directives, Part 1. In particular, the different approval criteria needed for the different types of ISO documents should be noted. This document was drafted in accordance with the editorial rules of the ISO/IEC Directives, Part 2 (see www.iso.org/directives).

ISO draws attention to the possibility that the implementation of this document may involve the use of (a) patent(s). ISO takes no position concerning the evidence, validity or applicability of any claimed patent rights in respect thereof. As of the date of publication of this document, ISO had received notice of (a) patent(s) which may be required to implement this document. However, implementers are cautioned that this may not represent the latest information, which may be obtained from the patent database available at www.iso.org/patents. ISO shall not be held responsible for identifying any or all such patent rights.

Any trade name used in this document is information given for the convenience of users and does not constitute an endorsement.

For an explanation of the voluntary nature of standards, the meaning of ISO specific terms and expressions related to conformity assessment, as well as information about ISO's adherence to the World Trade Organization (WTO) principles in the Technical Barriers to Trade (TBT), see www.iso.org/iso/foreword.html.

This document was prepared by Technical Committee ISO/TC 22, *Road vehicles*, Subcommittee SC 34, *Propulsion, powertrain and powertrain fluids*.

This third edition cancels and replaces the second edition (ISO 6626-2:2013), which has been technically revised.

The main changes are as follows:

— classes of nominal contact pressure moved to ISO 6626-1:2024, Annex A and introduced normalized tangential force;

— verification and correction of figures;

— update of dimension in Tables 8 to 16.

A list of all parts in the ISO 6626 series can be found on the ISO website.

Any feedback or questions on this document should be directed to the user's national standards body. A complete listing of these bodies can be found at www.iso.org/members.html.

© ISO 2024 – All rights reserved

Documents
Document Sharing Hub
Full document details: BS ISO 6626-2:2024

Introduction

The ISO 6626 series is one of a series of International Standards dealing with piston rings for reciprocating internal combustion engines. Others are the ISO 6621 series, ISO 6622, ISO 6623, ISO 6624, ISO 6625, the ISO 6626 series and ISO 6627.

The common features and dimensional tables presented in this document constitute a broad range of variables and, in selecting a particular ring type, the designer should be aware of the conditions under which it will be required to operate.

© ISO 2024 – All rights reserved

Documents
Document Sharing Hub
Full document details: BS ISO 6626-2:2024

Internal combustion engines — Piston rings —

Part 2: Coil-spring-loaded oil control rings of narrow width made of cast iron

1 Scope

This document specifies the essential dimensional features of coil-spring loaded oil control rings made of cast iron, types DSF-C, SSF, GSF, DSF, SSF-L, DSF-NG and DSF-CNP. It is applicable to those piston rings in sizes 60 mm up to 160 mm, inclusive for reciprocating internal combustion engines for road vehicles and other applications.

2 Normative references

The following documents are referred to in the text in such a way that some or all of their content constitutes requirements of this document. For dated references, only the edition cited applies. For undated references, the latest edition of the referenced document (including any amendments) applies.

ISO 6621-3, *Internal combustion engines — Piston rings — Part 3: Material specifications*

ISO 6621-4, *Internal combustion engines — Piston rings — Part 4: General specifications*

ISO 6621-5, *Internal combustion engines — Piston rings — Part 5: Quality requirements*

3 Terms and definitions

No terms and definitions are listed in this document.

ISO and IEC maintain terminology databases for use in standardization at the following addresses:

— ISO Online browsing platform: available at https://www.iso.org/obp

— IEC Electropedia: available at https://www.electropedia.org/

4 Overview

The coil-spring loaded oil control ring types are specified in Figures 1 to 8. Their common features and the features' dimensions are specified in Tables 1 to 5 and shown in Figures 9 to 11. Essential features of coil springs are shown in Figures 12 to 16. Tables 8 to 16 give the dimensions of coil-spring loaded oil control rings.

The common features and dimensional tables presented in this document constitute a broad range of variables and, in selecting a particular ring type, the designer shall bear in mind the conditions under which it will be required to operate.

The designer shall refer to the specifications and requirements of ISO 6621-3 and ISO 6621-4 before completing a selection.

For the cast iron part, the recommended material is class 10 and shall be in accordance with ISO 6621-3. For special applications, material classes 20 to 50 may be used.

© ISO 2024 – All rights reserved

Documents
Document Sharing Hub
Full document details: BS ISO 6626-2:2024

Variation from these in face design and spring groove may be used, as recommended by individual manufacturers, in plain or chromed versions.

5 Piston ring types and designation

5.1 Types DFS-C, DFS-CNP, SSF, GSF, DSF, DSF-NG, and SSF-L — General features and dimensions

See Figure 1 and Tables 8 to 16. Figure 1 is applicable to Figures 2 to 8. Figures 2 to 8 show detailed cross sections corresponding to Figure 1.

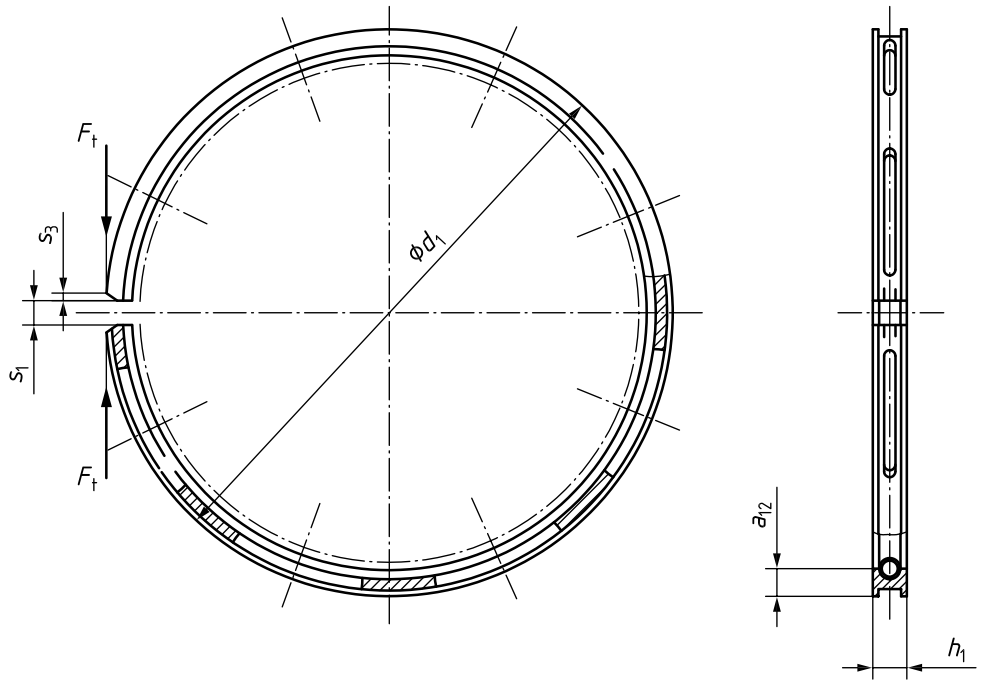

Figure 1 — Types DSF-C, SSF, GSF, DSF, SSF-L, DSF-NG and DSF-CNP

5.2 Type DSF-C — Coil-spring loaded bevelled edge oil control ring, chromium plated and profile ground

5.2.1 General features and dimensions

See Figure 2 and Tables 6 and 7.

© ISO 2024 – All rights reserved

Documents
Document Sharing Hub
Full document details: BS ISO 6626-2:2024

Dimensions in millimetres

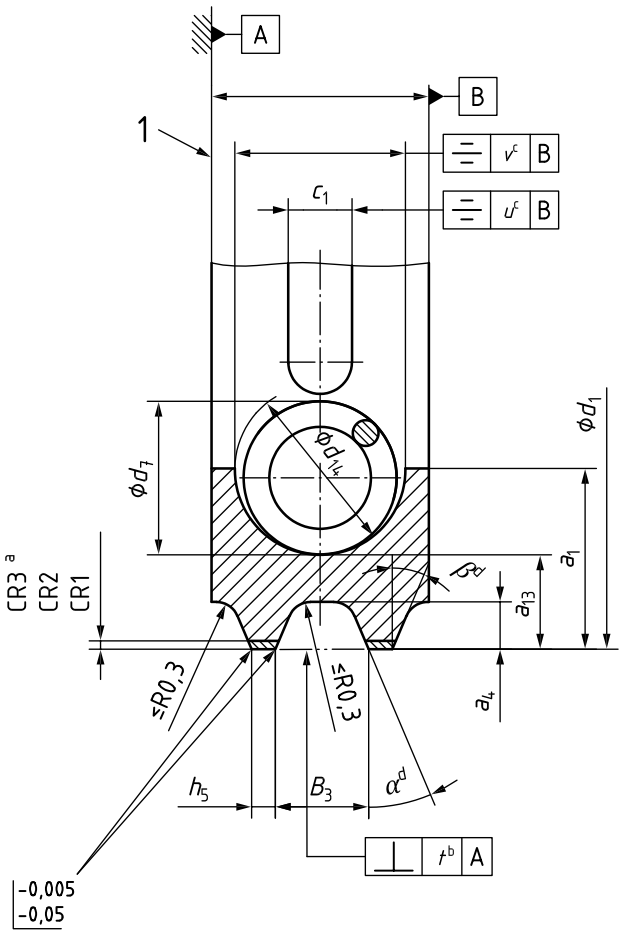

Key

1 reference plane

a See Table 3.

b See Table 4.

c See Table 5.

d Angle α and β to be agreed between manufacturer and customer, angles can be different (historical value is 35°).

Figure 2 — Type DSF-C

5.2.2 Designation of a Type DSF-C piston ring in accordance with ISO 6626-2

EXAMPLE Coil-spring loaded bevelled edge oil control ring, chromium plated and profile ground (DSF-C), of nominal diameter d_1 = 80 mm (80), nominal ring width h_1 = 2,5 mm (2,5), land width h_5 = 0,25 mm (0,25), made of grey cast iron, non-heat treated, material subclass 11 (MC11), having a selected closed gap of 0,20 mm min. (S020), a chromium layer thickness on the lands of 0,10 mm (CR2), reduced slot length (WK), a coil spring with reduced heat set (WF), and a variable pitch with coil diameter d_7 ground (CSE), with tangential force F_t in accordance with the nominal contact pressure p_0 = 1,0 N/mm^2 (PN1,0) and the ring marked with the manufacturer's mark (MM). Parameters in parenthesis are used in the ISO ring designation:

Piston ring ISO 6626-2 DSF-C - 80 × 2,5 × 0,25 - MC11 / S020 CR2 WK WF CSE PN1,0 MM

© ISO 2024 – All rights reserved

Documents
Document Sharing Hub
Full document details: BS ISO 6626-2:2024

5.3 Type DSF-CNP — Coil-spring loaded bevelled edge oil control ring, chromium plated not profile ground

5.3.1 General features and dimensions

See Figure 3 and Tables 8 and 9.

Dimensions in millimetres

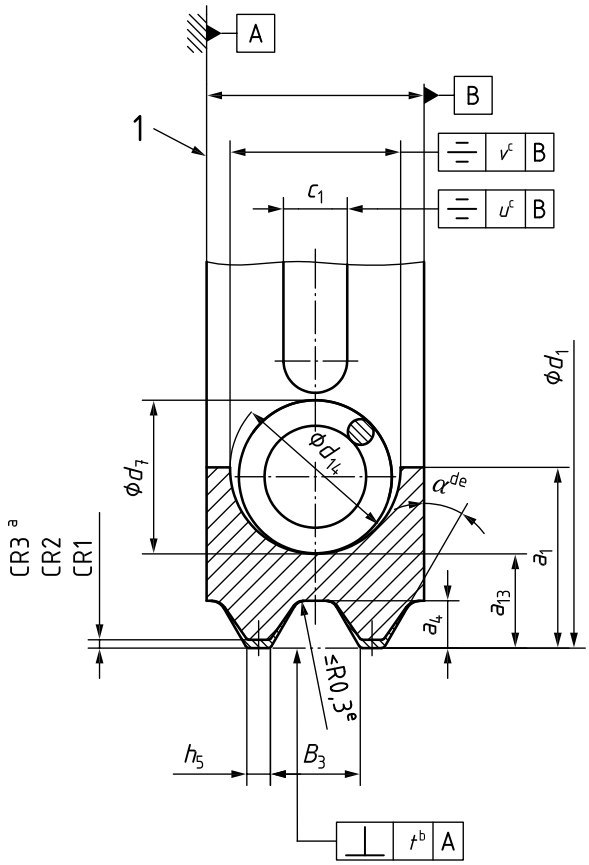

Key

1 reference plane

a See Table 3.

b See Table 4.

c See Table 5.

d Angle α and β to be agreed between manufacturer and customer, angles can be different (historical value is 35°).

e Before plating.

Figure 3 — Type DSF-CNP

5.3.2 Designation of a Type DSF-CNP piston ring in accordance with ISO 6626-2

EXAMPLE Coil-spring loaded bevelled edge oil control ring, chromium plated not profile ground (DSF-CNP) of nominal diameter d_1 = 100 mm (100), nominal ring width h_1 = 2,0 mm (2,0), land width h_5 = 0,25 mm (0,25), made of grey cast iron, non-heat treated, material subclass 12 (MC12), constant spring pitch (CSN) and tangential force F_t in accordance with the nominal contact pressure p_0 = 1,0 N/mm^2 (PN1,0). Parameters in parenthesis are used in the ISO ring designation:

Piston ring ISO 6626-2 DSF-CNP- 100 × 2 × 0,25 - MC12 / CSN PN1,0

© ISO 2024 – All rights reserved

Documents
Document Sharing Hub
Full document details: BS ISO 6626-2:2024