BS ISO 6626-3:2019

BSI Standards Publication

# Internal combustion engines — Piston rings

Part 3: Coil-spring-loaded oil control rings made of steel

Documents
Document Sharing Hub

Full document details: BS ISO 6626-3:2019

# National foreword

This British Standard is the UK implementation of ISO 6626-3:2019. It supersedes BS ISO 6626-3:2008, which is withdrawn.

The UK participation in its preparation was entrusted to Technical Committee MCE/14/-/10, RIC engines - Cylinders, pistons and rings.

A list of organizations represented on this committee can be obtained on request to its secretary.

This publication does not purport to include all the necessary provisions of a contract. Users are responsible for its correct application.

© The British Standards Institution 2019
Published by BSI Standards Limited 2019

ISBN 978 0 580 89503 6

ICS 43.060.10

**Compliance with a British Standard cannot confer immunity from legal obligations.**

This British Standard was published under the authority of the Standards Policy and Strategy Committee on 30 September 2019.

**Amendments/corrigenda issued since publication**

| Date | Text affected |
|---|---|

Documents
Document Sharing Hub

Full document details: BS ISO 6626-3:2019

INTERNATIONAL STANDARD

# ISO 6626-3

Second edition
2019-09

# Internal combustion engines — Piston rings —

## Part 3: Coil-spring-loaded oil control rings made of steel

*Moteurs à combustion interne — Segments de piston —*

*Partie 3: Segments racleurs régulateurs d'huile, en acier, mis en charge par ressort hélicoïdal*

Reference number
ISO 6626-3:2019(E)

Documents
Document Sharing Hub
© ISO 2019

Full document details: BS ISO 6626-3:2019

**COPYRIGHT PROTECTED DOCUMENT**

© ISO 2019

All rights reserved. Unless otherwise specified, or required in the context of its implementation, no part of this publication may be reproduced or utilized otherwise in any form or by any means, electronic or mechanical, including photocopying, or posting on the internet or an intranet, without prior written permission. Permission can be requested from either ISO at the address below or ISO's member body in the country of the requester.

ISO copyright office
CP 401 • Ch. de Blandonnet 8
CH-1214 Vernier, Geneva
Phone: +41 22 749 01 11
Fax: +41 22 749 09 47
Email: copyright@iso.org
Website: www.iso.org

Published in Switzerland



© ISO 2019 – All rights reserved

Documents
Document Sharing Hub

Full document details: BS ISO 6626-3:2019

# Contents

Page

**Foreword** ... **iv**

**Introduction** ... **v**

**1 Scope** ... **1**

**2 Normative references** ... **1**

**3 Terms, definitions and symbols** ... **1**
3.1 Symbols ... 1

**4 Piston ring types and designation examples** ... **2**
4.1 Type SOR — Steel oil control rings with R-shaped groove ... 2
4.1.1 General features and dimensions ... 2
4.1.2 Designation ... 3
4.2 Type SOV — Steel oil control rings with V-shaped groove ... 3
4.2.1 General features and dimensions ... 3
4.2.2 Designation ... 4

**5 Common features** ... **4**
5.1 Ring width $h_1$ and radial wall thickness $a_1$ ... 4
5.2 Land width $h_5$ ... 5
5.3 Land angle $\alpha$, $\beta$ ... 5
5.4 Land spacing $B_3$ ... 5
5.5 Slot sizes ... 6
5.6 Nitrided surface ... 6
5.7 PVD coating thickness of peripheral surface ... 7
5.8 Nominal contact pressure and tangential force ... 7
5.8.1 Nominal contact pressure ... 7
5.8.2 Actual tangential force, $F_t$, and tolerance ... 8
5.8.3 Normalized tangential force, $F_N$ ... 8
5.9 Tolerance of tangential force $F_t$ ... 8

**6 Coil springs** ... **8**
6.1 Types of coil spring ... 8
6.2 Coil-spring excursion (extended gap) ... 10
6.3 Position of coil spring gap and fixing ... 11
6.4 Material ... 11

**7 Type SOR** ... **11**

**8 Type SOV** ... **11**

**9 Dimensions** ... **12**

**Bibliography** ... **26**

© ISO 2019 – All rights reserved



Documents
Document Sharing Hub

Full document details: BS ISO 6626-3:2019

# Foreword

ISO (the International Organization for Standardization) is a worldwide federation of national standards bodies (ISO member bodies). The work of preparing International Standards is normally carried out through ISO technical committees. Each member body interested in a subject for which a technical committee has been established has the right to be represented on that committee. International organizations, governmental and non-governmental, in liaison with ISO, also take part in the work. ISO collaborates closely with the International Electrotechnical Commission (IEC) on all matters of electrotechnical standardization.

The procedures used to develop this document and those intended for its further maintenance are described in the ISO/IEC Directives, Part 1. In particular, the different approval criteria needed for the different types of ISO documents should be noted. This document was drafted in accordance with the editorial rules of the ISO/IEC Directives, Part 2 (see www.iso.org/directives).

Attention is drawn to the possibility that some of the elements of this document may be the subject of patent rights. ISO shall not be held responsible for identifying any or all such patent rights. Details of any patent rights identified during the development of the document will be in the Introduction and/or on the ISO list of patent declarations received (see www.iso.org/patents).

Any trade name used in this document is information given for the convenience of users and does not constitute an endorsement.

For an explanation of the voluntary nature of standards, the meaning of ISO specific terms and expressions related to conformity assessment, as well as information about ISO's adherence to the World Trade Organization (WTO) principles in the Technical Barriers to Trade (TBT) see www.iso.org/iso/foreword.html.

This document was prepared by Technical Committee ISO/TC 22, *Road vehicles*, Subcommittee SC 34, *Propulsion, powertrain and powertrain fluids*.

This second edition cancels and replaces the first edition (ISO 6266-3:2008), which has been technically revised. The main changes compared to the previous edition are as follows:

— added subclause 5.8.2, Actual tangential force, $F_t$ and tolerance;

— added subclause 5.8.3, Normalized tangential force, $F_N$;

— added Table 9, Normalized tangential forces, $F_N$;

— raised table numbers by one from Table 9 onward;

— made editorial changes to Table 16.

Any feedback or questions on this document should be directed to the user's national standards body. A complete listing of these bodies can be found at www.iso.org/members.html.


© ISO 2019 – All rights reserved
Documents
Document Sharing Hub
Full document details: BS ISO 6626-3:2019

# Introduction

ISO 6626 (all parts) is one of a series of International Standards dealing with piston rings for reciprocating internal combustion engines. Others are ISO 6621 (all parts), ISO 6622 (all parts), ISO 6623, ISO 6624 (all parts), ISO 6625 and ISO 6627 (see Clause 2 and Bibliography).

The common features and dimensional tables presented in this document constitute a broad range of variables and, in selecting a particular ring type, the designer will bear in mind the conditions under which it will be required to operate.

© ISO 2019 – All rights reserved


Documents
Document Sharing Hub
Full document details: BS ISO 6626-3:2019

Documents
Document Sharing Hub

# Internal combustion engines — Piston rings —

# Part 3: Coil-spring-loaded oil control rings made of steel

## 1 Scope

This document specifies the essential dimensions of coil-spring-loaded oil control rings made of steel, of piston ring types SOR (with R-shaped groove) and SOV (with V-shaped groove).

This document applies to coil-spring-loaded oil control rings made of steel with a diameter from 60 mm up to and including 160 mm for reciprocating internal combustion engines. It can also be used for piston rings in compressors working under analogous conditions.

## 2 Normative references

There are no normative references in this document.

## 3 Terms, definitions and symbols

No terms and definitions are listed in this document.

ISO and IEC maintain terminological databases for use in standardization at the following addresses:

— ISO Online browsing platform: available at https://www.iso.org/obp

— IEC Electropedia: available at http://www.electropedia.org/

### 3.1 Symbols

$a_1$ radial wall thickness

$a_4$ groove depth

$a_{12}$ radial thickness over coil spring

$a_{13}$ groove depth and bridge

$a_{17}$ external land depth

$B_3$ land spacing

$c_1$ slot width

$d_1$ nominal diameter (nominal bore diameter)

$d_7$ coil-spring diameter

$d_{14}$ coil-spring groove diameter for type SOR

$f_1$ coil-spring excursion

$F_t$ tangential force

© ISO 2019 – All rights reserved

Documents Document Sharing Hub
Full document details: BS ISO 6626-3:2019

$h_1$ ring width

$h_5$ land width

$p_0$ contact pressure

$s_1$ closed gap

$w_1$ slot length

$w_3$ slot spacing

$\alpha$ land angle inside

$\beta$ land angle outside

$\theta$ groove angle for type SOV

NOTE These symbols (including associated indices) are in accordance with the symbols used in ISO 6621 (all parts), ISO 6622 (all parts), ISO 6623, ISO 6624 (all parts), ISO 6625, ISO 6627 and other parts of the ISO 6626 series.

# 4 Piston ring types and designation examples

## 4.1 Type SOR — Steel oil control rings with R-shaped groove

### 4.1.1 General features and dimensions

Figure 1 shows the general features and dimensions of piston ring type SOR.


© ISO 2019 – All rights reserved
Documents
Document Sharing Hub
Full document details: BS ISO 6626-3:2019

Dimensions in millimetres

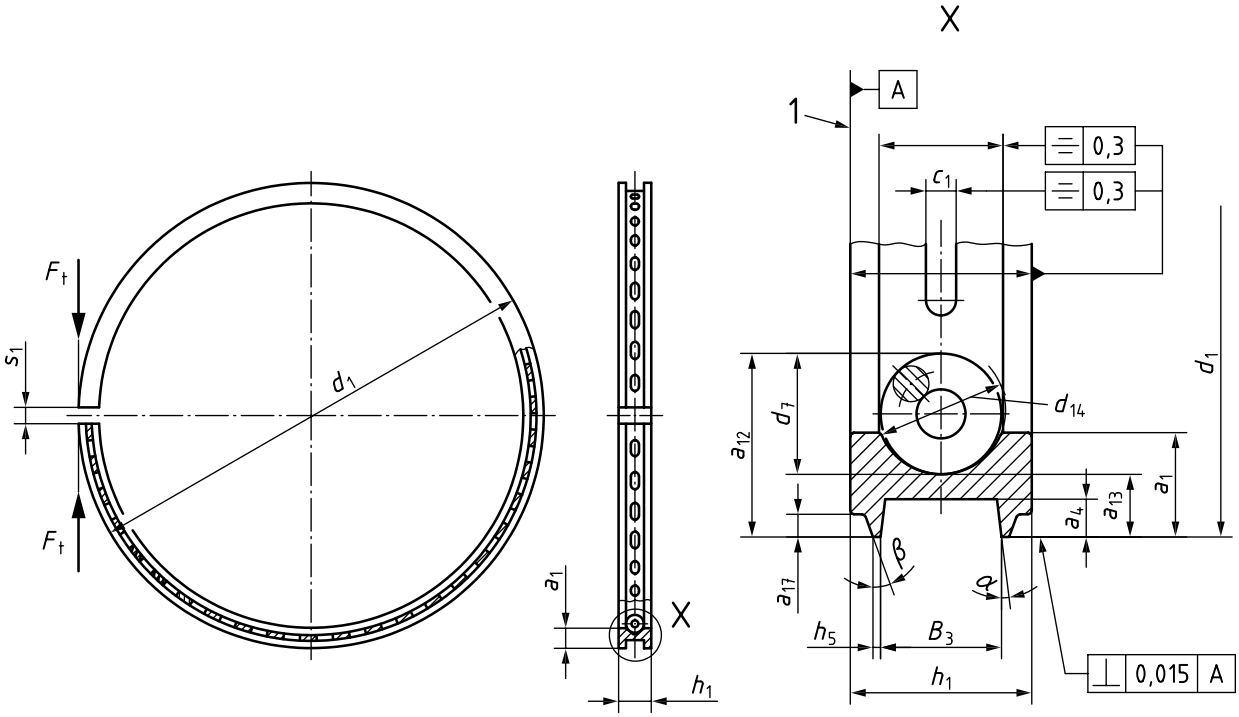


**Key**

1 reference plane

NOTE 1 For definitions of symbols, see Clause 3.

NOTE 2 For dimensions, see Tables 1, 2, 3, 4, 5, 11, 12, 14, 15, 16, 17, 18 and 19.

**Figure 1 — General features and dimensions of piston ring type SOR**

### 4.1.2 Designation

EXAMPLE A coil-spring-loaded oil control ring with R-shaped groove (SOR), a radial wall thickness class = small (S), of nominal diameter $d_1$ = 100 mm (100), a nominal ring width $h_1$ = 3 mm (3), a land width $h_5$ = 0,20 mm (0,20), made of steel MC65 (MC65), a nitrided depth of 0,030 mm min. (NT030), coil spring with reduced heat set (WF), and variable pitch with coil diameter $d_7$ ground (CSE), medium nominal contact pressure $p_0$ = 1,5 MPa (PN1,5):

**Piston ring ISO 6626-3 SOR-S - 100 × 3 × 0,20 – MC65/NT030 WF CSE PN1,5**

## 4.2 Type SOV — Steel oil control rings with V-shaped groove

### 4.2.1 General features and dimensions

Figure 2 shows the general features and dimensions of piston ring type SOV.

© ISO 2019 – All rights reserved



Documents
Document Sharing Hub
Full document details: BS ISO 6626-3:2019