BS ISO 6721-10:2015

BSI Standards Publication

Plastics — Determination of dynamic mechanical properties

Part 10: Complex shear viscosity using a parallel-plate oscillatory rheometer

bsi.

...making excellence a habit.™

Document Sharing Hub

Full document details: BS ISO 6721-10:2015

National foreword

This British Standard is the UK implementation of ISO 6721-10:2015. It supersedes BS ISO 6721-10:1999 which is withdrawn.

The UK participation in its preparation was entrusted to Technical Committee PRI/21, Testing of plastics.

A list of organizations represented on this committee can be obtained on request to its secretary.

This publication does not purport to include all the necessary provisions of a contract. Users are responsible for its correct application.

© The British Standards Institution 2015.
Published by BSI Standards Limited 2015

ISBN 978 0 580 83208 6

ICS 83.080.01

Compliance with a British Standard cannot confer immunity from legal obligations.

This British Standard was published under the authority of the Standards Policy and Strategy Committee on 31 October 2015.

Amendments/corrigenda issued since publication

Date	Text affected

Documents
Document Sharing Hub

Full document details: BS ISO 6721-10:2015

INTERNATIONAL STANDARD

ISO 6721-10

Third edition
2015-09-15

Plastics — Determination of dynamic mechanical properties —

Part 10: Complex shear viscosity using a parallel-plate oscillatory rheometer

Plastiques — Détermination des propriétés mécaniques dynamiques —

Partie 10: Viscosité complexe en cisaillement à l'aide d'un rhéomètre à oscillations à plateaux parallèles

Reference number
ISO 6721-10:2015(E)

Documents
Document Sharing Hub

© ISO 2015

Full document details: BS ISO 6721-10:2015

COPYRIGHT PROTECTED DOCUMENT

© ISO 2015, Published in Switzerland

All rights reserved. Unless otherwise specified, no part of this publication may be reproduced or utilized otherwise in any form or by any means, electronic or mechanical, including photocopying, or posting on the internet or an intranet, without prior written permission. Permission can be requested from either ISO at the address below or ISO's member body in the country of the requester.

ISO copyright office
Ch. de Blandonnet 8 • CP 401
CH-1214 Vernier, Geneva, Switzerland
Tel. +41 22 749 01 11
Fax +41 22 749 09 47
copyright@iso.org
www.iso.org

© ISO 2015 – All rights reserved

Documents
Document Sharing Hub

Full document details: BS ISO 6721-10:2015

Contents

Page

Foreword ... **iv**

1 Scope ... **1**

2 Normative references ... **1**

3 Terms and definitions ... **1**

4 Principle ... **2**

5 Apparatus ... **2**
- 5.1 Measurement apparatus ... 2
- 5.2 Temperature-controlled enclosure ... 3
- 5.3 Temperature measurement and control ... 3
- 5.4 Plate/specimen assembly ... 4
- 5.5 Calibration ... 4

6 Sampling ... **4**

7 Procedure ... **5**
- 7.1 Test temperature ... 5
- 7.2 Zeroing the gap ... 5
- 7.3 Introducing the test specimen ... 5
- 7.4 Conditioning the test specimen ... 5
- 7.5 Test mode (controlled stress or controlled strain) ... 5
- 7.6 Determination of thermal stability of sample material ... 6
- 7.7 Determination of region of linear-viscoelastic behaviour ... 6
  - 7.7.1 In the controlled-strain mode ... 6
  - 7.7.2 In the controlled-stress mode ... 6
  - 7.7.3 Confirmation of linear-viscoelastic behaviour ... 7
- 7.8 Frequency sweep ... 7
- 7.9 Temperature sweep ... 7
- 7.10 Air entrapment ... 7

8 Expression of results ... **7**
- 8.1 Symbols used ... 7
- 8.2 Calculation of complex shear modulus and complex shear viscosity ... 8

9 Precision ... **10**

10 Test report ... **11**

Annex A (informative) **Uncertainty limits** ... **12**

Annex B (informative) **Verification of rheometer performance** ... **15**

Bibliography ... **19**

© ISO 2015 – All rights reserved

Documents
Document Sharing Hub
Full document details: BS ISO 6721-10:2015

Foreword

ISO (the International Organization for Standardization) is a worldwide federation of national standards bodies (ISO member bodies). The work of preparing International Standards is normally carried out through ISO technical committees. Each member body interested in a subject for which a technical committee has been established has the right to be represented on that committee. International organizations, governmental and non-governmental, in liaison with ISO, also take part in the work. ISO collaborates closely with the International Electrotechnical Commission (IEC) on all matters of electrotechnical standardization.

The procedures used to develop this document and those intended for its further maintenance are described in the ISO/IEC Directives, Part 1. In particular the different approval criteria needed for the different types of ISO documents should be noted. This document was drafted in accordance with the editorial rules of the ISO/IEC Directives, Part 2 (see www.iso.org/directives).

Attention is drawn to the possibility that some of the elements of this document may be the subject of patent rights. ISO shall not be held responsible for identifying any or all such patent rights. Details of any patent rights identified during the development of the document will be in the Introduction and/or on the ISO list of patent declarations received (see www.iso.org/patents).

Any trade name used in this document is information given for the convenience of users and does not constitute an endorsement.

For an explanation on the meaning of ISO specific terms and expressions related to conformity assessment, as well as information about ISO's adherence to the WTO principles in the Technical Barriers to Trade (TBT) see the following URL: Foreword - Supplementary information.

The committee responsible for this document is ISO/TC 61, *Plastics*, Subcommittee SC 5, *Physical-chemical properties*.

This third edition cancels and replaces the second edition (ISO 6721-10:1999), which has been technically revised to include informative guidance on verification of the instruments performance (Annex B).

ISO 6721 consists of the following parts, under the general title *Plastics — Determination of dynamic mechanical properties*:

— *Part 1: General principles*

— *Part 2: Torsion-pendulum method*

— *Part 3: Flexural vibration — Resonance-curve method*

— *Part 4: Tensile vibration — Non-resonance method*

— *Part 5: Flexural vibration — Non-resonance method*

— *Part 6: Shear vibration — Non-resonance method*

— *Part 7: Torsional vibration — Non-resonance method*

— *Part 8: Longitudinal and shear vibration — Wave-propagation method*

— *Part 9: Tensile vibration — Sonic-pulse propagation method*

— *Part 10: Complex shear viscosity using a parallel-plate oscillatory rheometer*

— *Part 11: Glass transition temperature*

— *Part 12: Compressive vibration — Non-resonance method*

Annex A and Annex B of this part of ISO 6721 is for information only.

© ISO 2015 – All rights reserved
Documents
Document Sharing Hub
Full document details: BS ISO 6721-10:2015

INTERNATIONAL STANDARD ISO 6721-10:2015(E)

Plastics — Determination of dynamic mechanical properties —

Part 10: Complex shear viscosity using a parallel-plate oscillatory rheometer

1 Scope

This part of ISO 6721 specifies the general principles of a method for determining the dynamic rheological properties of polymer melts at angular frequencies typically in the range of 0,01 rad·s^{-1} to 100 rad·s^{-1} by means of an oscillatory rheometer with a parallel-plate geometry. Angular frequencies outside this range can also be used (see Note 1). The method is used to determine values of the following dynamic rheological properties: complex shear viscosity η^*, dynamic shear viscosity η', the out-of-phase component of the complex shear viscosity η'', complex shear modulus G^*, shear loss modulus G'', and shear storage modulus G'. It is suitable for measuring complex shear viscosity values typically up to ~10 MPa·s (see Note 2).

NOTE 1 The angular-frequency measurement range is limited by the specification of the measuring instrument and also by the response of the specimen. When testing using angular frequencies lower than 0,1 rad·s^{-1}, the test time can increase significantly as the time taken to obtain a single measurement is proportional to the reciprocal of the angular frequency. Consequently, when testing at low angular frequencies, degradation or polymerization of the specimen is more likely to occur and have an effect on the results. At high angular frequencies, the specimen can distort or fracture at the edge, consequently invalidating the test results.

NOTE 2 The range of complex shear viscosity values that can be measured is dependent on the specimen dimensions and also the specification of the measuring instrument. For a specimen of given dimensions, the upper limit of the range is limited by the machine's torque capacity, angular-displacement resolution, and compliance. However, correction can be made for compliance effects.

2 Normative references

The following documents, in whole or in part, are normatively referenced in this document and are indispensable for its application. For dated references, only the edition cited applies. For undated references, the latest edition of the referenced document (including any amendments) applies.

ISO 472, *Plastics — Vocabulary*

ISO 5725-1, *Accuracy (trueness and precision) of measurement methods and results — Part 1: General principles and definitions*

ISO 6721-1, *Plastics — Determination of dynamic mechanical properties — Part 1: General principles*

3 Terms and definitions

For the purposes of this document, the terms and definitions given in ISO 6721-1, ISO 5725-1, ISO 472, and the following apply.

3.1
controlled-strain mode
testing by applying a sinusoidal angular displacement of constant amplitude

© ISO 2015 – All rights reserved

Documents
Document Sharing Hub
Full document details: BS ISO 6721-10:2015

3.2
controlled-stress mode
testing by applying a sinusoidal torque of constant amplitude

3.3
complex shear viscosity
η^*
ratio of dynamic stress, given by $\sigma(t) = \sigma_0 \exp i\omega t$, and dynamic rate of strain where the shear strain $\dot{\gamma}(t)$ is given by $\gamma(t) = \gamma_0 \exp i(\omega t - \delta)$, of a viscoelastic material that is subjected to a sinusoidal vibration, where σ_0 and γ_0 are the amplitudes of the stress and strain cycles, ω is the angular frequency, δ is the phase angle between the stress and strain, and t is time

Note 1 to entry: It is expressed in pascal seconds.

3.4
dynamic shear viscosity
η'
real part of the complex shear viscosity

Note 1 to entry: It is expressed in pascal seconds.

3.5
out-of-phase component of the complex shear viscosity
η''
imaginary part of the complex shear viscosity

Note 1 to entry: It is expressed in pascal seconds.

4 Principle

The specimen is held between two concentric, circular parallel plates (see Figure 1). The thickness of the specimen is small compared with the diameter of the plates.

The specimen is subjected to either a sinusoidal torque or a sinusoidal angular displacement of constant angular frequency. These are referred to as “controlled-stress” or “controlled-strain” test modes, respectively. When using the controlled-stress mode, the resultant displacement and the phase shift between the torque and displacement are measured. When using the controlled-strain mode, the resultant torque and the phase shift between the displacement and torque are measured.

The complex shear modulus G^*, shear storage modulus G', shear loss modulus G'', phase angle δ, and corresponding shear viscosity terms (see Clause 3) are determined from the measured torque and displacement and the specimen dimensions. In deriving these values, it is assumed that the specimen exhibits a linear-viscoelastic response.

The mode of oscillation used is designated as oscillatory mode I (see ISO 6721-1, Clause 4).

5 Apparatus

5.1 Measurement apparatus

The measurement apparatus shall consist of two concentric, rigid, circular parallel plates between which the specimen is placed (see Figure 1). One of these plates shall be made to oscillate at a constant angular frequency while the other remains at rest.

The requirements on the apparatus are that it shall permit measurement of the amplitudes of the torque and the angular displacement and the phase difference between them for a specimen subjected to either a sinusoidal torque or a sinusoidal displacement of constant angular frequency.

© ISO 2015 – All rights reserved
Documents
Document Sharing Hub
Full document details: BS ISO 6721-10:2015

A torque-measuring device shall be connected to one of the plates, thus permitting measurement of the torque required to overcome the viscoelastic resistance of the specimen.

An angular-displacement measuring device shall be fitted to the moving plate, thus permitting determination of its angular displacement and angular frequency.

The apparatus shall be capable of measuring the torque to within ±2 % of the minimum torque amplitude used to determine the dynamic properties.

The apparatus shall be capable of measuring the angular displacement to within $\pm 20 \times 10^{-6}$ rad.

The apparatus shall be capable of measuring the angular frequency to within ±2 % of the absolute value.

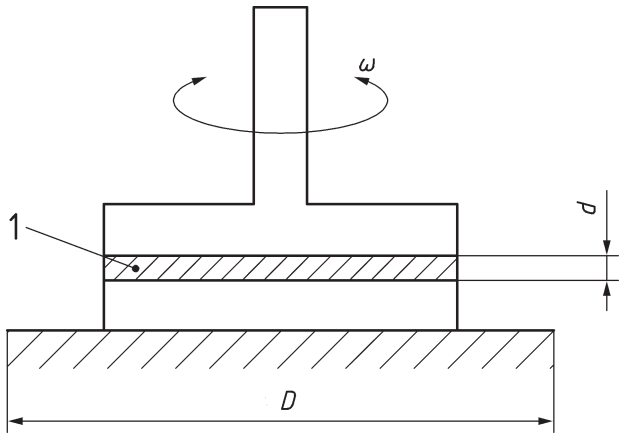

Key

1 test specimen

ω angular frequency

d specimen thickness

D diameter of plate

Figure 1 — Parallel-plate rheometer geometry

5.2 Temperature-controlled enclosure

Heating may be provided by the use of forced convection, radio-frequency heating, or other suitable means.

An environmental chamber surrounding the plate/specimen assembly can be used to provide specific test environments, for example a nitrogen atmosphere.

Check that the chamber is not in contact with the plate/specimen assembly.

5.3 Temperature measurement and control

The test temperature shall preferably be measured using a device that is either in contact with or embedded in the fixed plate.

The test temperature shall be accurate to within ±0,5 °C of the set temperature for set temperatures up to 200 °C, within ±1,0 °C for temperatures in the range 200 °C to 300 °C, and within ±1,5 °C for temperatures above 300 °C.

The temperature-measuring device shall have a resolution of 0,1 °C and shall be calibrated using a device accurate to within ±0,1 °C.

© ISO 2015 – All rights reserved

Documents
Document Sharing Hub
Full document details: BS ISO 6721-10:2015