BS ISO 6747:2013

BSI Standards Publication

Earth-moving machinery — Dozers — Terminology and commercial specifications

bsi.

...making excellence a habit.™

Document Sharing Hub

National foreword

This British Standard is the UK implementation of ISO 6747:2013. It supersedes BS 6914-6:1999 which is withdrawn.

The UK participation in its preparation was entrusted to Technical Committee B/513/1, Earth moving machinery (International).

A list of organizations represented on this committee can be obtained on request to its secretary.

This publication does not purport to include all the necessary provisions of a contract. Users are responsible for its correct application.

© The British Standards Institution 2013. Published by BSI Standards Limited 2013

ISBN 978 0 580 66568 4

ICS 01.040.53; 53.100

Compliance with a British Standard cannot confer immunity from legal obligations.

This British Standard was published under the authority of the Standards Policy and Strategy Committee on 31 March 2013.

Amendments issued since publication

Date	Text affected

Documents
Document Sharing Hub

Full document details: BS ISO 6747:2013

INTERNATIONAL STANDARD

ISO 6747

Fourth edition
2013-02-01

Earth-moving machinery — Dozers — Terminology and commercial specifications

Engins de terrassement — Bouteurs — Terminologie et spécifications commerciales

Reference number
ISO 6747:2013(E)

Documents
Document Sharing Hub

© ISO 2013

Full document details: BS ISO 6747:2013

COPYRIGHT PROTECTED DOCUMENT

© ISO 2013

All rights reserved. Unless otherwise specified, no part of this publication may be reproduced or utilized in any form or by any means, electronic or mechanical, including photocopying and microfilm, without permission in writing from either ISO at the address below or ISO's member body in the country of the requester.

ISO copyright office
Case postale 56 • CH-1211 Geneva 20
Tel. + 41 22 749 01 11
Fax + 41 22 749 09 47
E-mail copyright@iso.org
Web www.iso.org

Published in Switzerland

© ISO 2013 – All rights reserved

Documents
Document Sharing Hub

Full document details: BS ISO 6747:2013

Contents

Page

Foreword ..... **iv**

1 Scope **1**

2 Normative references **1**

3 Terms and definitions **1**
3.1 General 1
3.2 Masses 7
3.3 Performance 8

4 Base machine **9**
4.1 Type of dozer 9
4.2 Dimensions 11
4.3 Nomenclature (see diagram numbers) 18

5 Commercial literature specifications **23**
5.1 Engine 23
5.2 Transmission 23
5.3 Hydraulic system 24
5.4 System fluid capacities 24
5.5 Blade specification 24
5.6 Masses 24
5.7 Overall dimensions 25
5.8 Crawler machines 25
5.9 Wheeled machines 25

Annex A (normative) **Dozer dimensions** **27**

Bibliography **32**

© ISO 2013 – All rights reserved

Documents
Document Sharing Hub
Full document details: BS ISO 6747:2013

Foreword

ISO (the International Organization for Standardization) is a worldwide federation of national standards bodies (ISO member bodies). The work of preparing International Standards is normally carried out through ISO technical committees. Each member body interested in a subject for which a technical committee has been established has the right to be represented on that committee. International organizations, governmental and non-governmental, in liaison with ISO, also take part in the work. ISO collaborates closely with the International Electrotechnical Commission (IEC) on all matters of electrotechnical standardization.

International Standards are drafted in accordance with the rules given in the ISO/IEC Directives, Part 2.

The main task of technical committees is to prepare International Standards. Draft International Standards adopted by the technical committees are circulated to the member bodies for voting. Publication as an International Standard requires approval by at least 75 % of the member bodies casting a vote.

Attention is drawn to the possibility that some of the elements of this document may be the subject of patent rights. ISO shall not be held responsible for identifying any or all such patent rights.

ISO 6747 was prepared by Technical Committee ISO/TC 127, *Earth-moving machinery*, Subcommittee SC 4, *Terminology, commercial nomenclature, classification and ratings*.

This fourth edition cancels and replaces the third edition (ISO 6747:1998), which has been technically revised.

© ISO 2013 – All rights reserved
Documents
Document Sharing Hub
Full document details: BS ISO 6747:2013

INTERNATIONAL STANDARD ISO 6747:2013(E)

Earth-moving machinery — Dozers — Terminology and commercial specifications

1 Scope

This International Standard establishes terminology and the content of commercial literature specifications for self-propelled crawler and wheeled dozers and their equipment.

2 Normative references

The following documents, in whole or in part, are normatively referenced in this document and are indispensable for its application. For dated references, only the edition cited applies. For undated references, the latest edition of the referenced document (including any amendments) applies.

ISO 5010, *Earth-moving machinery — Rubber-tyred machines — Steering requirements*

ISO 6014, *Earth-moving machinery — Determination of ground speed*

ISO 6746-1, *Earth-moving machinery — Definitions of dimensions and codes — Part 1: Base machine*

ISO 6746-2, *Earth-moving machinery — Definitions of dimensions and codes — Part 2: Equipment and attachments*

ISO 7457, *Earth-moving machinery — Determination of turning dimensions of wheeled machines*

ISO 9249:2007, *Earth-moving machinery — Engine test code — Net power*

ISO 15550:2002, *Internal combustion engines — Determination and method for the measurement of engine power — General requirements*

3 Terms and definitions

For the purposes of this document, the following terms and definitions apply.

3.1 General

3.1.1
dozer
self-propelled crawler or wheeled machine with equipment having either a dozing attachment which cuts, moves and grades material through forward motion of the machine or a mounted attachment used to exert a push or a pull force

[SOURCE: ISO 6165:2012, 4.1]

Note 1 to entry: See Figures 10, 11.

3.1.2
base machine
machine with a cab or canopy and operator-protective structures if required, without equipment or attachments but possessing the necessary mounting for such equipment and attachments

[SOURCE: ISO 6746-1:2003, 3.3]

© ISO 2013 – All rights reserved

Documents
Document Sharing Hub
Full document details: BS ISO 6747:2013

3.1.3
equipment
set of components mounted onto the base machine that allows an attachment to perform the primary design function of the machine

[SOURCE: ISO 6746-2:2003, 3.4]

3.1.4
attachment
assembly of components that can be mounted onto the base machine or equipment for specific use

[SOURCE: ISO 6746-2:2003, 3.5]

3.1.5
component
part, or assembly of parts, of a base machine, equipment or attachment

[SOURCE: ISO 6746-2:2003, 3.6]

3.1.6
dozing equipment
front blade and its frame and relevant positioning devices

3.1.6.1
straight dozer
dozer where the blade is maintained in a position where the cutting edge is parallel to an X plane

Note 1 to entry: See Figure 1.

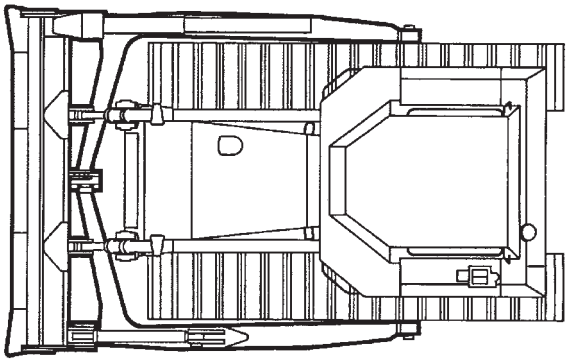

Figure 1 — Crawler-type straight dozer

3.1.6.2
angle dozer
dozer where the blade position can be changed so that the cutting edge is at an angle to an X plane

Note 1 to entry: See Figure 2.

© ISO 2013 – All rights reserved
Documents
Document Sharing Hub
Full document details: BS ISO 6747:2013

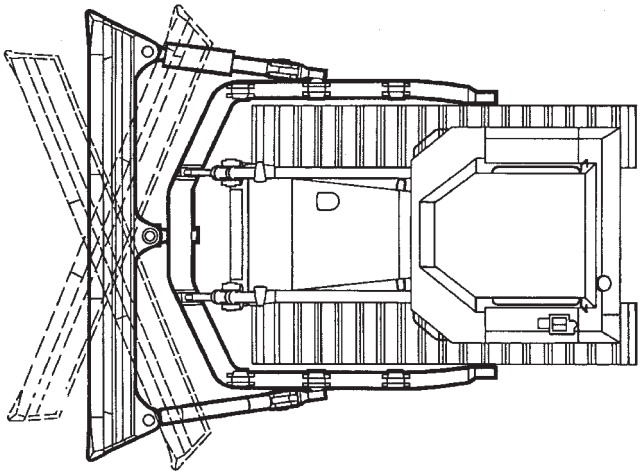

Figure 2 — Crawler-type angle dozer

3.1.6.3
tilt and pitch
type of movement of the blade of a straight dozer or angle dozer

Note 1 to entry: Blade operation is by hydraulic control where the operation is performed by means of a hydraulic system.

3.1.6.3.1
tilt movement
blade movement in which the position of the blade can be changed so that the cutting edge is at an angle to a Z plane

Note 1 to entry: See Figure 3.

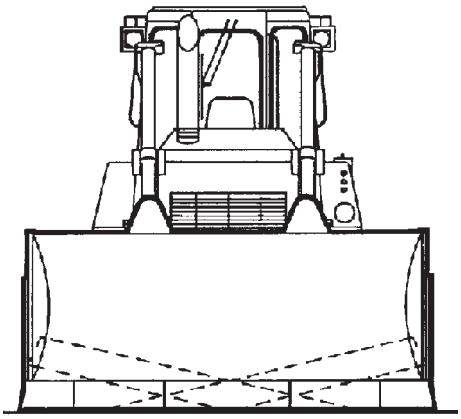

Figure 3 — Tilt movement

3.1.6.3.2
pitch movement
blade movement in which the upper portion of the blade can be changed in angle by pivoting it around a line parallel to the cutting edge

Note 1 to entry: See Figure 4.

© ISO 2013 – All rights reserved

Documents
Document Sharing Hub
Full document details: BS ISO 6747:2013

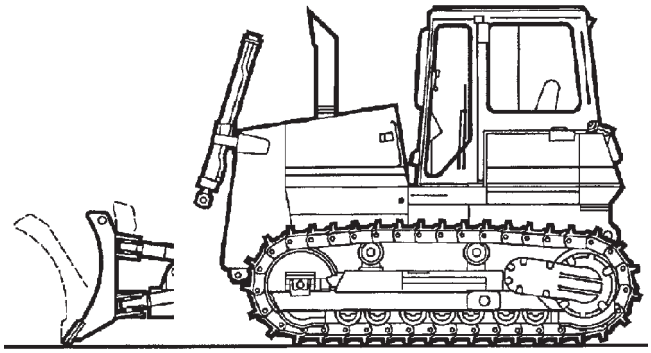

Figure 4 — Pitch movement

3.1.7
ripper
frame which is connected to the rear part of the base machine by means of a mounting bracket, and which is equipped with one or more teeth

Note 1 to entry: See Figures 5, 6 and 7. For dimensions, see Figure 19.

Note 2 to entry: There are four types of ripper, as defined in 3.1.7.1 to 3.1.7.4.

3.1.7.1
radial type
type of ripper in which the ripping angle of the tooth tip to the ground varies according to change of the working depth

Note 1 to entry: See Figure 5.

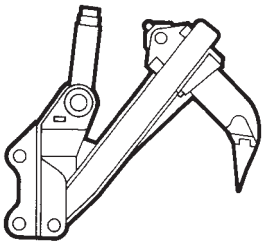

Figure 5 — Ripper — Radial type

3.1.7.2
parallelogram type
type of ripper in which the ripping angle of the tooth tip to the ground remains constant regardless of variations in working depth

Note 1 to entry: See Figure 6.

© ISO 2013 – All rights reserved
Documents
Document Sharing Hub
Full document details: BS ISO 6747:2013

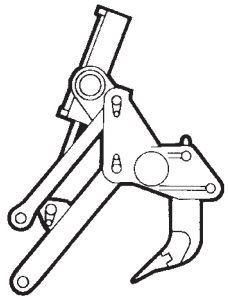

Figure 6 — Ripper — Parallelogram type

3.1.7.3
variable type
type of ripper in which the ripping angle of the tooth tip to the ground is variable and can be changed by the operator

Note 1 to entry: See Figure 7.

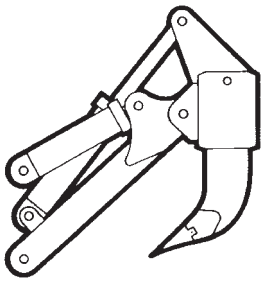

Figure 7 — Ripper — Variable type

3.1.7.4
impact ripper
ripper which exerts an additional impact force by a hydraulic pulsing system

3.1.8
winch
frame equipped with a drum and connected to the rear of the base machine

Note 1 to entry: See Figure 8. For dimensions, see Figure 20.

Note 2 to entry: There are two types of winch operation, as defined in 3.1.8.1 and 3.1.8.2.

© ISO 2013 – All rights reserved

Documents
Document Sharing Hub
Full document details: BS ISO 6747:2013

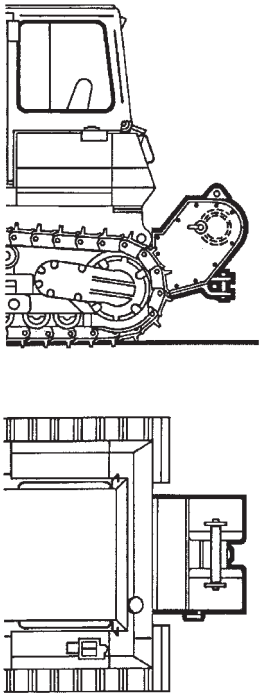

Figure 8 — Winch

3.1.8.1
manually-controlled winch
type of winch which is operated by a manually controlled clutch and brake

3.1.8.2
power-controlled winch
type of winch which is operated hydraulically or by a power clutch and brake

3.1.9
swinging drawbar
frame, equipped with a swing selector bar and a drawbar, connected to the rear of the base machine

Note 1 to entry: See Figure 9. For dimensions, see Figure 21.

© ISO 2013 – All rights reserved
Documents
Document Sharing Hub
Full document details: BS ISO 6747:2013

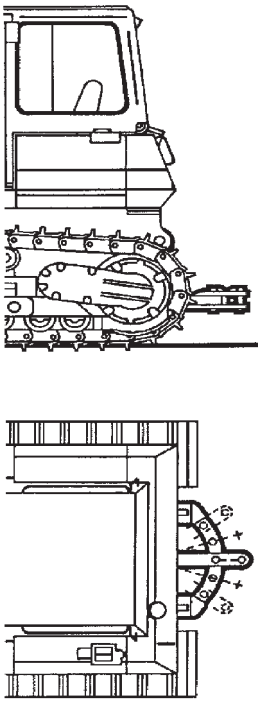

Figure 9 — Swinging drawbar

3.1.10
ground reference plane
GRP
plane on which the machine is placed for measurements: in the case of the base machine, a hard, level surface; in the case of equipment and attachments, either a hard, level surface or compacted earth

Note 1 to entry: The surface used depends on the intended use of the machine and its equipment and attachments. This needs to be defined when developing specific ISO terminology standards or commercial specifications.

[SOURCE: ISO 6746-1:2003, 3.3]

3.2 Masses

3.2.1
operating mass
OM
mass of the base machine, with equipment and empty attachment in the most usual configuration as specified by the manufacturer, and with the operator (75 kg), full fuel tank and all fluid systems (i.e. hydraulic oil, transmission oil, engine oil, engine coolant) at the levels specified by the manufacturer

[SOURCE: ISO 6016:2008, 3.2.1, modified — The expression “with sprinkler tank(s) half full” has been omitted.]

3.2.2 Axle distribution of masses of wheeled machines

3.2.2.1
axle load
mass on each axle at the operating mass (3.2.1)

[SOURCE: ISO 6016:2008, 3.2.5.1]

© ISO 2013 – All rights reserved

Documents
Document Sharing Hub
Full document details: BS ISO 6747:2013