BS ISO 6944-1:2024

BSI Standards Publication

Fire containment — Elements of building construction

Part 1: Ventilation ducts

Documents
Document Sharing Hub

Full document details: BS ISO 6944-1:2024

National foreword

This British Standard is the UK implementation of ISO 6944-1:2024.

The UK participation in its preparation was entrusted to Technical Committee FSH/22/-/4, Fire resistance tests for dampers, seals and smoke extraction.

A list of organizations represented on this committee can be obtained on request to its committee manager.

Contractual and legal considerations

This publication has been prepared in good faith, however no representation, warranty, assurance or undertaking (express or implied) is or will be made, and no responsibility or liability is or will be accepted by BSI in relation to the adequacy, accuracy, completeness or reasonableness of this publication. All and any such responsibility and liability is expressly disclaimed to the full extent permitted by the law.

This publication is provided as is, and is to be used at the recipient's own risk.

The recipient is advised to consider seeking professional guidance with respect to its use of this publication.

This publication is not intended to constitute a contract. Users are responsible for its correct application.

© The British Standards Institution 2024
Published by BSI Standards Limited 2024

ISBN 978 0 539 29496 5

ICS 13.220.50; 91.140.30

Compliance with a British Standard cannot confer immunity from legal obligations.

This British Standard was published under the authority of the Standards Policy and Strategy Committee on 30 June 2024.

Amendments/corrigenda issued since publication

Date	Text affected

Documents
Document Sharing Hub

Full document details: BS ISO 6944-1:2024

International Standard

ISO 6944-1

Second edition
2024-06

Fire containment — Elements of building construction —

Part 1: Ventilation ducts

Endiguement du feu — Éléments de construction —

Partie 1: Conduits de ventilation

Reference number
ISO 6944-1:2024(en)

© ISO 2024

Documents
Document Sharing Hub

Full document details: BS ISO 6944-1:2024

COPYRIGHT PROTECTED DOCUMENT

© ISO 2024

All rights reserved. Unless otherwise specified, or required in the context of its implementation, no part of this publication may be reproduced or utilized otherwise in any form or by any means, electronic or mechanical, including photocopying, or posting on the internet or an intranet, without prior written permission. Permission can be requested from either ISO at the address below or ISO's member body in the country of the requester.

ISO copyright office
CP 401 • Ch. de Blandonnet 8
CH-1214 Vernier, Geneva
Phone: +41 22 749 01 11
Email: copyright@iso.org
Website: www.iso.org

Published in Switzerland

Documents
Document Sharing Hub
Full document details: BS ISO 6944-1:2024

Contents

Page

Foreword ... **v**
Introduction ... **vi**
1 Scope ... **1**
2 Normative references ... **1**
3 Terms and definitions ... **2**
4 Apparatus ... **2**
5 Test conditions ... **10**
6 Test specimen ... **11**
6.1 Size ... 11
6.1.1 General ... 11
6.1.2 Length ... 11
6.1.3 Cross-section ... 11
6.2 Number ... 11
6.3 Design ... 11
6.3.1 General ... 11
6.3.2 Minimum separation ... 11
6.3.3 Configuration of duct A (horizontal only) ... 12
6.3.4 Openings in duct B ... 12
6.3.5 Joints in horizontal ducts ... 12
6.3.6 Joints in vertical ducts ... 13
6.3.7 Support for vertical ducts ... 13
6.3.8 Compensators ... 14
7 Installation of test specimen ... **14**
7.1 General ... 14
7.2 Standard supporting construction ... 15
7.3 Non-standard supporting constructions ... 15
7.4 Restraint of ducts ... 16
7.4.1 Inside the furnace ... 16
7.4.2 At the penetration point ... 16
7.4.3 Outside the furnace ... 16
7.4.4 Closure ... 16
7.4.5 Fire stopping ... 16
7.4.6 Unsupported vertical ducts ... 16
8 Conditioning ... **16**
8.1 General ... 16
8.2 Hygroscopic sealing materials ... 16
9 Application of instrumentation ... **17**
9.1 Thermocouples ... 17
9.1.1 Furnace thermocouples (plate thermometers) ... 17
9.1.2 Unexposed surface thermocouples ... 19
9.2 Pressure ... 22
10 Test procedure ... **23**
10.1 General ... 23
10.2 Control of conditions to permit assessment of integrity ... 23
10.2.1 Duct A ... 23
10.2.2 Duct B ... 23
10.3 Test measurements and observations ... 23
10.3.1 Integrity ... 23
10.3.2 Insulation ... 24
10.3.3 Restraint forces and thermal elongation or shortening ... 24
10.3.4 Additional observations ... 24

© ISO 2024 – All rights reserved

Documents
Document Sharing Hub
Full document details: BS ISO 6944-1:2024

10.4 Termination of the test ... 24

11 Performance criteria ... 24
11.1 Integrity ... 24
11.2 Insulation ... 24
11.2.1 General ... 24
11.2.2 Ducts with internal combustible linings only ... 24
11.3 Smoke leakage ... 25
11.4 Determination of fire resistance ... 25

12 Test report ... 25

13 Field of direct application of test results ... 25
13.1 General ... 25
13.2 Vertical and horizontal ducts ... 25
13.3 Sizes of ducts ... 26
13.4 Pressure difference ... 26
13.5 Height of vertical ducts ... 26
13.5.1 Ducts supported at each storey ... 26
13.5.2 Self-loadbearing ducts ... 26
13.5.3 Limitations on buckling ... 26
13.6 Suspension devices for horizontal ducts ... 27
13.7 Supporting construction ... 27
13.8 Steel ducts ... 27

Annex A (informative) **General guidance ... 28**

Bibliography ... 31

© ISO 2024 – All rights reserved

Documents
Document Sharing Hub
Full document details: BS ISO 6944-1:2024

Foreword

ISO (the International Organization for Standardization) is a worldwide federation of national standards bodies (ISO member bodies). The work of preparing International Standards is normally carried out through ISO technical committees. Each member body interested in a subject for which a technical committee has been established has the right to be represented on that committee. International organizations, governmental and non-governmental, in liaison with ISO, also take part in the work. ISO collaborates closely with the International Electrotechnical Commission (IEC) on all matters of electrotechnical standardization.

The procedures used to develop this document and those intended for its further maintenance are described in the ISO/IEC Directives, Part 1. In particular, the different approval criteria needed for the different types of ISO document should be noted. This document was drafted in accordance with the editorial rules of the ISO/IEC Directives, Part 2 (see www.iso.org/directives).

ISO draws attention to the possibility that the implementation of this document may involve the use of (a) patent(s). ISO takes no position concerning the evidence, validity or applicability of any claimed patent rights in respect thereof. As of the date of publication of this document, ISO had not received notice of (a) patent(s) which may be required to implement this document. However, implementers are cautioned that this may not represent the latest information, which may be obtained from the patent database available at www.iso.org/patents. ISO shall not be held responsible for identifying any or all such patent rights.

Any trade name used in this document is information given for the convenience of users and does not constitute an endorsement.

For an explanation of the voluntary nature of standards, the meaning of ISO specific terms and expressions related to conformity assessment, as well as information about ISO's adherence to the World Trade Organization (WTO) principles in the Technical Barriers to Trade (TBT), see www.iso.org/iso/foreword.html.

This document was prepared by Technical Committee ISO/TC 92, *Fire safety*, Subcommittee SC 2, *Fire Resistance*.

This second edition cancels and replaces the first edition (ISO 6944-1:2008), of which it constitutes a minor revision. It also incorporates the Amendment ISO 6944-1:2008/Amd. 1:2015.

The changes are as follows:

— references to ISO 5221:1984 (withdrawn) have been replaced with references to ISO 5167-2:2022 and ISO 5167-3:2022;

— key element 2 in Figure 2 and key elements 18, 19 and 20 to Figure 4 have been revised.

A list of all parts in the ISO 6944 series can be found on the ISO website.

Any feedback or questions on this document should be directed to the user's national standards body. A complete listing of these bodies can be found at www.iso.org/members.html.

© ISO 2024 – All rights reserved

Documents
Document Sharing Hub
Full document details: BS ISO 6944-1:2024

Introduction

The purpose of this test is to measure the ability of a representative duct or duct assembly that is part of an air-distribution system to resist the spread of fire from one fire compartment to another, with fire attack from inside or outside the duct. It is applicable to vertical and horizontal ducts, with or without branches, taking into account joints and exhaust openings, as well as suspension devices and penetration points.

This document is very similar to EN 1366-1, but includes an alternative arrangement for testing elbows.

The test measures the length of time during which ducts of specified dimensions, suspended as they normally are in practice, satisfy defined criteria when exposed to fire from either inside or outside the duct.

All ducts inside the furnace are fully restrained in all directions. Outside the furnace, ducts exposed to fire from the outside are tested unrestrained, while ducts exposed to fire from the inside (horizontal only) are tested restrained.

The test takes into account the effect of fire exposure from the outside, where a 300 Pa underpressure is maintained in the duct, as well as the effect of fire entering the ducts under conditions where forced air movement is potentially (but not necessarily) present, by maintaining an air velocity of 3 m/s.

Ducts exposed to fire from the inside are supplied with air in a manner that is representative of the “fan off” and “fan on” situations that can arise in practice.

© ISO 2024 – All rights reserved

Documents
Document Sharing Hub
Full document details: BS ISO 6944-1:2024

Fire containment — Elements of building construction —

Part 1: Ventilation ducts

CAUTION — The attention of all persons concerned with managing and carrying out this fire resistance test is drawn to the fact that fire testing can be hazardous and that there is the possibility that toxic and/or harmful smoke and gases can be evolved during the test. Mechanical and operational hazards can also arise during the construction of the test elements or structures, their testing and the disposal of test residues.

The duct assembly should be allowed to cool completely after the fire test, before dismantling, to minimize the possibility of ignition of combustible residues.

An assessment of all potential hazards and risks to health shall be made and safety precautions shall be identified and provided. Written safety instructions shall be issued. Appropriate training shall be given to relevant personnel. Laboratory personnel shall ensure that they follow written safety instructions at all times.

1 Scope

This document specifies a method for determining the fire resistance of vertical and horizontal ventilation ducts under standardized fire conditions. The test examines the behaviour of ducts exposed to fire from the outside (duct A) and fire inside the duct (duct B). This document is intended to be used in conjunction with ISO 834-1.

This document is not applicable to:

a) ducts whose fire resistance depends on the fire resistance performance of a ceiling;

b) ducts containing fire dampers at points where they pass through fire separations;

c) doors of inspection openings, unless included in the duct to be tested;

d) two-sided or three-sided ducts;

e) the fixing of suspension devices to floors or walls;

f) kitchen extract ducts (see ISO 6944-2).

NOTE Annex A provides general guidance and gives background information.

2 Normative references

The following documents are referred to in the text in such a way that some or all of their content constitutes requirements of this document. For dated references, only the edition cited applies. For undated references, the latest edition of the referenced document (including any amendments) applies.

ISO 834-1, *Fire-resistance tests — Elements of building construction — Part 1: General requirements*

ISO 5167-1, *Measurement of fluid flow by means of pressure differential devices inserted in circular cross-section conduits running full — Part 1: General principles and requirements*

© ISO 2024 – All rights reserved

Documents
Document Sharing Hub
Full document details: BS ISO 6944-1:2024

ISO 5167-2, *Measurement of fluid flow by means of pressure differential devices inserted in circular cross-section conduits running full — Part 2: Orifice plates*

ISO 5167-3, *Measurement of fluid flow by means of pressure differential devices inserted in circular cross-section conduits running full — Part 3: Nozzles and Venturi nozzles*

ISO 13943, *Fire safety — Vocabulary*

3 Terms and definitions

For the purposes of this document, the terms and definitions given in ISO 834-1 and ISO 13943 and the following apply.

ISO and IEC maintain terminology databases for use in standardization at the following addresses:

— ISO Online browsing platform: available at https://www.iso.org/obp

— IEC Electropedia: available at https://www.electropedia.org/

3.1
fire-resisting duct
duct used for the distribution or extraction of air and designed to provide a degree of fire resistance

3.2
suspension device
components used for supporting and fixing a duct from a floor or supporting a duct from a wall

3.3
supporting construction
wall, partition or floor through which the duct passes during the test

3.4
compensator
device that is used to prevent damage from the forces generated by expansion

4 Apparatus

4.1 In addition to the test equipment specified in ISO 834-1, the following apparatus is required.

4.2 **Furnace**, capable of subjecting ventilation ducts to the standard heating conditions specified in ISO 834-1 and suitable for testing ducts in the vertical (see Figure 1) or horizontal (see Figure 2) orientation.

Figures 1 and 2 show two ducts being tested together. When two ducts are tested together, they shall be separated by a minimum of 500 mm. It is also permitted to test each duct singularly in the furnace.

4.3 **Fan A**, capable of producing an underpressure of (300 ± 15) Pa within duct A (see Figure 3) at the start and throughout the test, and which shall be connected, either directly or by a suitable length of flexible ducting, to the volume flow-measuring station (4.5).

4.4 **Fan B**, capable of producing an air velocity when extracting gas from duct B (see Figure 4) of at least 3 m/s measured at ambient temperature in the duct before the test.

It shall be connected, either directly or by a suitable length of flexible ducting, to the velocity-measuring station (4.8). The fan shall be provided with a by-pass vent that can be opened prior to shutting the damper (4.7).

© ISO 2024 – All rights reserved

Documents
Document Sharing Hub
Full document details: BS ISO 6944-1:2024

Dimensions in millimetres

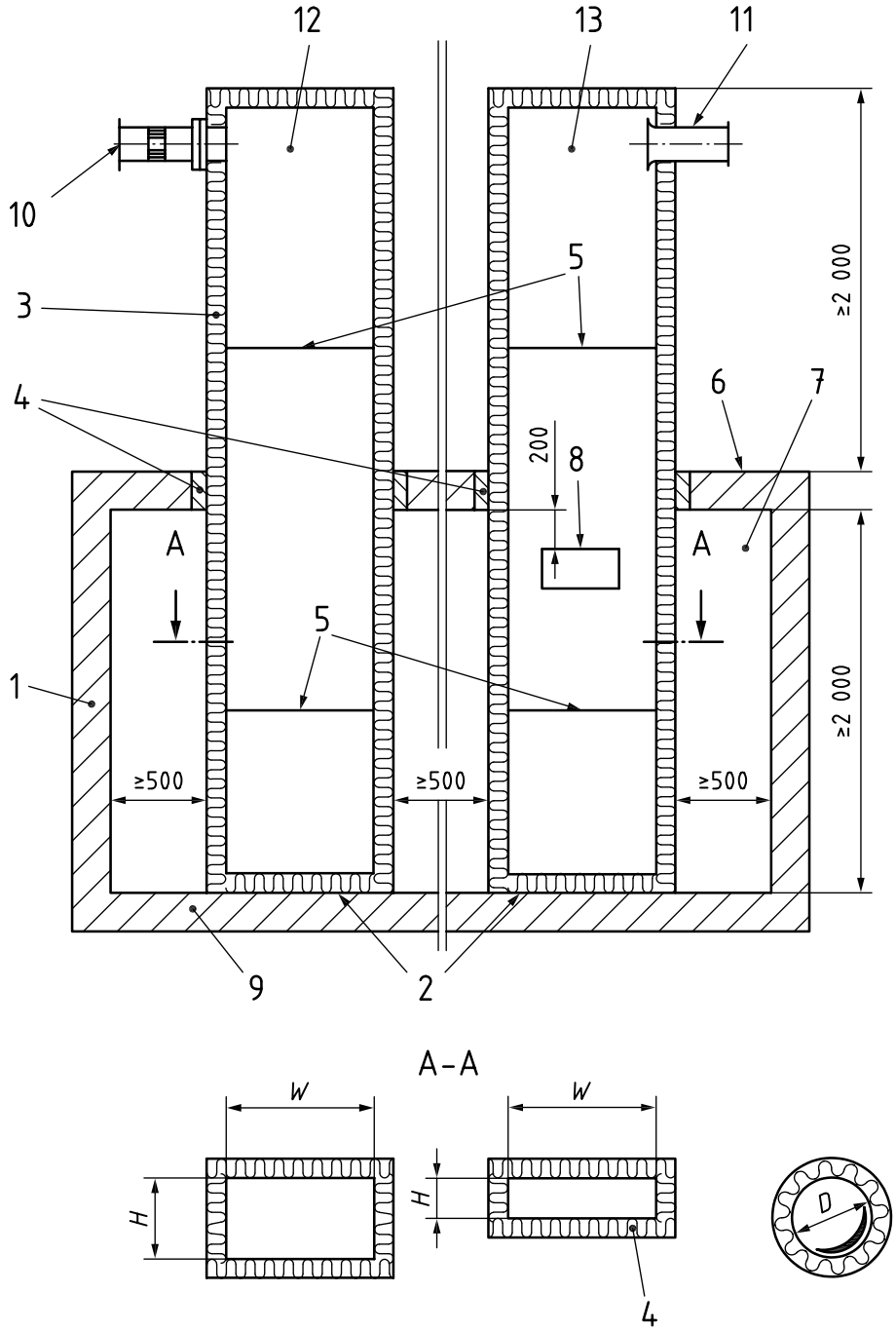

Key

1	furnace wall	7	furnace chamber
2	sealed end	8	openings providing a total area of 50 % of duct cross-section
3	fire-protection system	9	furnace floor
4	location for fire stopping (normal practice)	10	leakage-measuring station (see Figure 3 for details)
5	joint in fire-protection system	11	gas-velocity-measuring station (see Figure 4 for details)
6	furnace roof	12	duct A
		13	duct B

W width

© ISO 2024 – All rights reserved

Documents
Document Sharing Hub
Full document details: BS ISO 6944-1:2024

H height

D diameter

See 4.2.

Figure 1 — Test arrangement for vertical ducts

Dimensions in millimetres

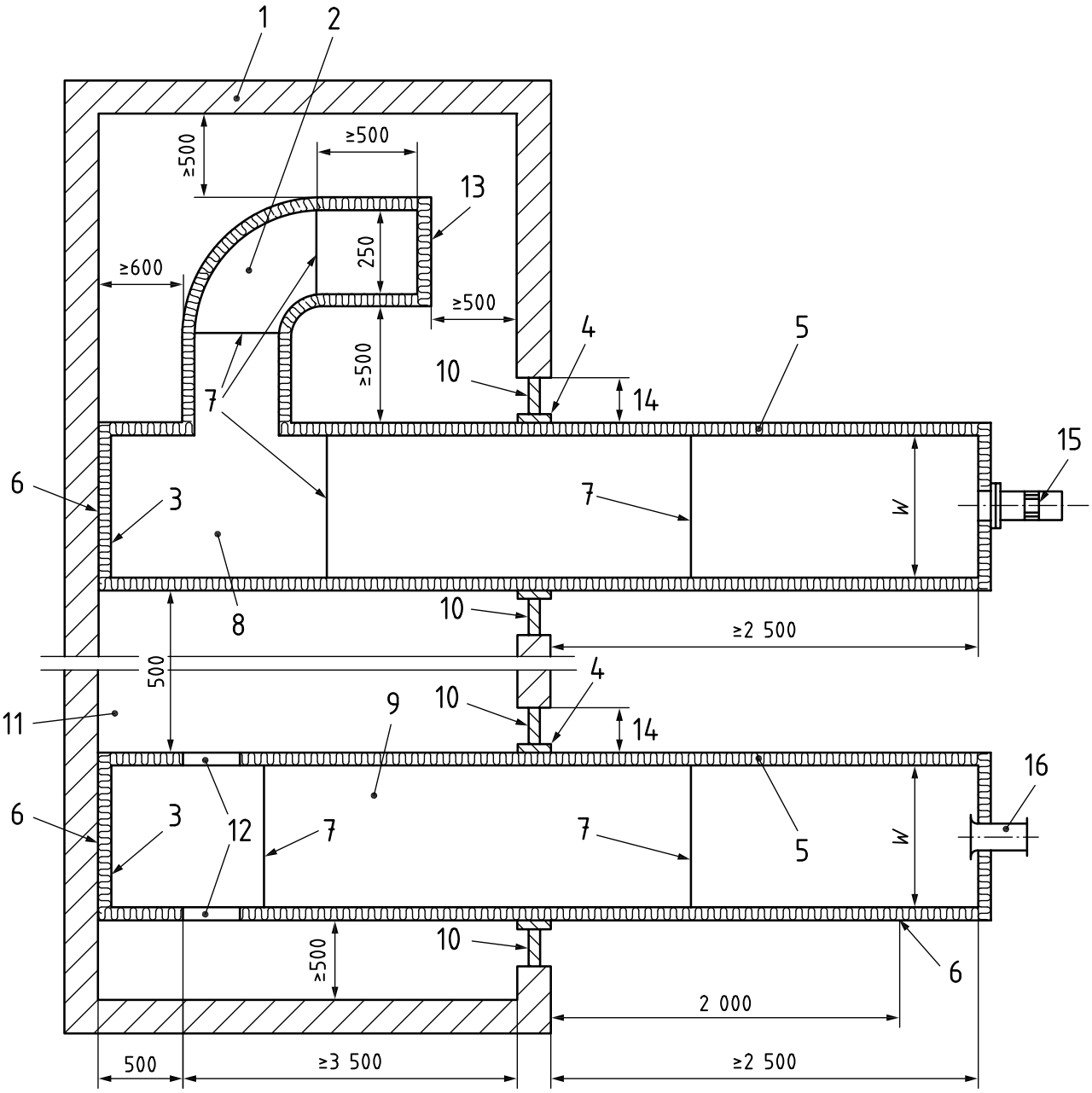

Key

1	furnace wall	9	duct B
2	duct with 90° elbow	10	supporting construction
3	sealed end	11	furnace chamber
4	location for fire stopping (normal practice)	12	openings providing a total area of 50 % of duct cross-section
5	fire-protection system	13	sealed end of elbow
6	location of restraint positions	14	200 mm minimum supporting construction
7	joints in fire-protection system	15	leakage-measuring station (see Figure 3 for details)

© ISO 2024 – All rights reserved

Documents
Document Sharing Hub
Full document details: BS ISO 6944-1:2024