BS ISO 6953-2:2024

BSI Standards Publication

Pneumatic fluid power — Compressed air pressure regulators and filter-regulators

Part 2: Test methods to determine the main characteristics to include in supplier's literature

Documents
Document Sharing Hub

Full document details: BS ISO 6953-2:2024

National foreword

This British Standard is the UK implementation of ISO 6953-2:2024. It supersedes BS ISO 6953-2:2015, which is withdrawn.

The UK participation in its preparation was entrusted to Technical Committee MCE/18/-/5, Control components.

A list of organizations represented on this committee can be obtained on request to its committee manager.

Contractual and legal considerations

This publication has been prepared in good faith, however no representation, warranty, assurance or undertaking (express or implied) is or will be made, and no responsibility or liability is or will be accepted by BSI in relation to the adequacy, accuracy, completeness or reasonableness of this publication. All and any such responsibility and liability is expressly disclaimed to the full extent permitted by the law.

This publication is provided as is, and is to be used at the recipient's own risk.

The recipient is advised to consider seeking professional guidance with respect to its use of this publication.

This publication is not intended to constitute a contract. Users are responsible for its correct application.

© The British Standards Institution 2024
Published by BSI Standards Limited 2024

ISBN 978 0 539 19456 2

ICS 23.100.50

Compliance with a British Standard cannot confer immunity from legal obligations.

This British Standard was published under the authority of the Standards Policy and Strategy Committee on 31 January 2024.

Amendments/corrigenda issued since publication

Date	Text affected

Documents
Document Sharing Hub

Full document details: BS ISO 6953-2:2024

International Standard

ISO 6953-2

Third edition
2024-01

Pneumatic fluid power — Compressed air pressure regulators and filter-regulators —

Part 2: Test methods to determine the main characteristics to include in supplier's literature

Transmissions pneumatiques — Régulateurs de pression et filtres-régulateurs pour air comprimé —

Partie 2: Méthodes d'essai pour déterminer les principales caractéristiques à inclure dans la documentation des fournisseurs

Reference number
ISO 6953-2:2024(en)

© ISO 2024

Documents
Document Sharing Hub

Full document details: BS ISO 6953-2:2024

COPYRIGHT PROTECTED DOCUMENT

© ISO 2024

All rights reserved. Unless otherwise specified, or required in the context of its implementation, no part of this publication may be reproduced or utilized otherwise in any form or by any means, electronic or mechanical, including photocopying, or posting on the internet or an intranet, without prior written permission. Permission can be requested from either ISO at the address below or ISO's member body in the country of the requester.

ISO copyright office
CP 401 • Ch. de Blandonnet 8
CH-1214 Vernier, Geneva
Phone: +41 22 749 01 11
Email: copyright@iso.org
Website: www.iso.org

Published in Switzerland

© ISO 2024 – All rights reserved

Documents
Document Sharing Hub

Full document details: BS ISO 6953-2:2024

Contents

Page

Foreword ... **v**
Introduction ... **vi**
1 Scope ... **1**
2 Normative references ... **1**
3 Terms and definitions ... **2**
4 Symbols and units ... **2**
5 Test conditions ... **2**
5.1 Gas supply ... 2
5.2 Temperature ... 2
5.3 Pressures ... 3
5.4 Inlet pressure ... 3
5.5 Test pressures (regulated pressure) ... 3
6 Test procedure to verify rated pressure ... **3**
7 Flow characteristics tests ... **4**
7.1 Test installation ... 4
7.2 General requirements ... 5
7.3 Test procedures ... 6
7.3.1 Initial test procedure ... 6
7.3.2 Forward flow rate-pressure characteristics test ... 6
7.3.3 Relief flow rate-pressure characteristics test ... 6
7.3.4 Procedure for other regulated pressure values ... 7
7.4 Calculation of characteristics ... 7
7.4.1 Flow rate-pressure characteristic curves ... 7
7.4.2 Flow rate-pressure hysteresis ... 8
7.4.3 Maximum forward sonic conductance ... 8
7.4.4 Maximum relief sonic conductance ... 9
8 Pressure regulation test ... **9**
8.1 Test circuit ... 9
8.2 Test procedure ... 9
9 Maximum air consumption at null forward flow rate or relief flow rate for pilot-operated regulator with air bleed ... **10**
9.1 Test installation ... 10
9.2 Test procedures ... 10
9.3 Calculation of characteristics ... 10
10 Special test procedures ... **11**
10.1 Pilot pressure/regulated pressure characteristics test in the case of external pilot-operated pressure regulators ... 11
10.1.1 Test installation ... 11
10.1.2 Test procedures ... 11
10.1.3 Calculation of characteristics ... 11
10.2 Output resolution in the case of manual air pressure regulator ... 13
10.2.1 Test installation ... 13
10.2.2 Test procedures ... 13
10.2.3 Calculation of characteristic ... 14
10.3 Resolution in case of pressure-pilot air pressure regulator ... 15
10.3.1 Test procedures ... 15
10.3.2 Calculation of characteristic ... 15
10.4 Sensitivity ... 15
10.4.1 Test procedures ... 15
10.4.2 Calculation of characteristic ... 16
10.5 Repeatability test ... 16

© ISO 2024 – All rights reserved

AVA Documents
Document Sharing Hub

Full document details: BS ISO 6953-2:2024

10.5.1 General ... 16
10.5.2 Test installation ... 16
10.5.3 General test method ... 17
10.5.4 Test execution ... 17
10.5.5 Calculation of the repeatability value ... 18

11 Presentation of data ... 18
11.1 General ... 18
11.2 Flow rate-pressure characteristics ... 18
11.3 Pressure regulation characteristics ... 18
11.4 Maximum air consumption for pilot operated regulators with air bleed ... 18
11.5 Additional characteristics for pressure-pilot air pressure regulators ... 18
11.6 Additional characteristics for manual air pressure regulators ... 19

Annex A (informative) **Comparison of repeatability test methods for manual air pressure regulators ... 20**

Bibliography ... 39

© ISO 2024 – All rights reserved

Documents
Document Sharing Hub
Full document details: BS ISO 6953-2:2024

Foreword

ISO (the International Organization for Standardization) is a worldwide federation of national standards bodies (ISO member bodies). The work of preparing International Standards is normally carried out through ISO technical committees. Each member body interested in a subject for which a technical committee has been established has the right to be represented on that committee. International organizations, governmental and non-governmental, in liaison with ISO, also take part in the work. ISO collaborates closely with the International Electrotechnical Commission (IEC) on all matters of electrotechnical standardization.

The procedures used to develop this document and those intended for its further maintenance are described in the ISO/IEC Directives, Part 1. In particular, the different approval criteria needed for the different types of ISO document should be noted. This document was drafted in accordance with the editorial rules of the ISO/IEC Directives, Part 2 (see www.iso.org/directives).

ISO draws attention to the possibility that the implementation of this document may involve the use of (a) patent(s). ISO takes no position concerning the evidence, validity or applicability of any claimed patent rights in respect thereof. As of the date of publication of this document, ISO had not received notice of (a) patent(s) which may be required to implement this document. However, implementers are cautioned that this may not represent the latest information, which may be obtained from the patent database available at www.iso.org/patents. ISO shall not be held responsible for identifying any or all such patent rights.

Any trade name used in this document is information given for the convenience of users and does not constitute an endorsement.

For an explanation of the voluntary nature of standards, the meaning of ISO specific terms and expressions related to conformity assessment, as well as information about ISO's adherence to the World Trade Organization (WTO) principles in the Technical Barriers to Trade (TBT), see www.iso.org/iso/foreword.html.

This document was prepared by Technical Committee ISO/TC 131, *Fluid power systems*, Subcommittee SC 5, *Control products and components*.

This third edition cancels and replaces the second edition (ISO 6953-2:2015), which has been technically revised.

The main changes are as follows:

— addition of new paragraph for an additional test for relief flow rate (7.3.3);

— addition of new paragraph for a test for resolution in case of pressure-pilot air pressure regulator (10.3);

— addition of new detailed test procedure for repeatability test for manual air-pressure regulator and pilot pressure air-pressure regulator (10.5);

— addition of measure of the sensitivity.

A list of all parts in the ISO 6953 series can be found on the ISO website.

Any feedback or questions on this document should be directed to the user's national standards body. A complete listing of these bodies can be found at www.iso.org/members.html.

© ISO 2024 – All rights reserved

Documents
Document Sharing Hub

Full document details: BS ISO 6953-2:2024

Introduction

In pneumatic fluid power systems, power is transmitted and controlled through a gas under pressure within a circuit.

When pressure reduction or pressure regulation is required, regulators and filter-regulators are components designed to maintain the pressure of the gas at an approximately constant level.

It is therefore necessary to know the performance characteristics of these components in order to determine their suitability in an application.

© ISO 2024 – All rights reserved

Documents
Document Sharing Hub

Full document details: BS ISO 6953-2:2024

Pneumatic fluid power — Compressed air pressure regulators and filter-regulators —

Part 2: Test methods to determine the main characteristics to include in supplier's literature

1 Scope

This document specifies test procedures and a method of presenting the results concerning the parameters which define the main characteristics to be included in the literature from suppliers of regulators and filter-regulators conforming to ISO 6953-1.

The purpose of this document is to:

— facilitate the comparison of pressure regulators and filter-regulators by standardizing test methods and presentation of test data;

— assist in the proper application of pressure regulators and filter-regulators in compressed air systems.

The tests specified are intended to allow comparison among the different types of regulators and filter-regulators; they are not production tests to be carried out on each pressure regulator or filter-regulator manufactured.

ISO 6953-3 can be used as an alternative dynamic test method for flow-rate characteristics using an isothermal tank instead of a flow meter. However, this method measures only the decreasing flow rate part of the hysteresis curve of forward flow and relief flow characteristics.

NOTE The tests related to electro-pneumatic pressure control valves are specified in ISO 10094–2.

2 Normative references

The following documents are referred to in the text in such a way that some or all of their content constitutes requirements of this document. For dated references, only the edition cited applies. For undated references, the latest edition of the referenced document (including any amendments) applies.

ISO 3448, *Industrial liquid lubricants — ISO viscosity classification*

ISO 5598, *Fluid power systems and components — Vocabulary*

ISO 6358-1, *Pneumatic fluid power — Determination of flow-rate characteristics of components using compressible fluids — Part 1: General rules and test methods for steady-state flow*

ISO 6953-1:2024, *Pneumatic fluid power — Compressed air pressure regulators and filter-regulators — Part 1: Main characteristics to be included in literature from suppliers and product-marking requirements*

ISO 10094-1, *Pneumatic fluid power — Electro-pneumatic pressure control valves — Part 1: Main characteristics to include in the supplier's literature*

© ISO 2024 – All rights reserved

Documents
Document Sharing Hub
Full document details: BS ISO 6953-2:2024

3 Terms and definitions

For the purposes of this document, the terms and definitions given in ISO 5598, ISO 6358-1, ISO 6953-1 and ISO 10094-1 apply.

ISO and IEC maintain terminology databases for use in standardization at the following addresses:

— ISO Online browsing platform: available at https://www.iso.org/obp

— IEC Electropedia: available at https://www.electropedia.org/

4 Symbols and units

The symbols and units used in this document are shown in Table 1.

Table 1 — Symbols and units

Description	Symbol	SI unit	Practical unit
Reference atmosphere	p_{atm}	Pa	kPa or bar
Inlet pressure	p_1	Pa	kPa or bar
Regulated pressure	p_2	Pa	kPa or bar
Pilot pressure	w	Pa	kPa or bar
Forward volumetric flow rate at standard reference atmosphere	q_{vf}	m^3/s (ANR)	dm^3/min (ANR)
Relief volumetric flow rate at standard reference atmosphere	q_{vr}	m^3/s (ANR)	dm^3/min (ANR)
Sonic conductance	C_f	kg / (s.Pa) (ANR)	m^3 / (s.Pa)(ANR)
Reference temperature	T_0	K	°C
Inlet temperature	T_1	K	°C
Temperature at the regulated port	T_2	K	°C
Hysteresis	H	-	% FS
Resolution	S	-	% FS
Output resolution	S_o	-	% FS
Sensitivity	m	-	Pa/Pa or Pa/number of turns of control knob
Repeatability	r	-	% FS

Key

ANR standard reference atmosphere (see ISO 8778)

FS full scale

NOTE 1 bar = 0,1 MPa = 10^5 Pa; 1 MPa = 1 N/mm^2.

5 Test conditions

5.1 Gas supply

Unless otherwise specified, testing shall be conducted with compressed air. If another gas is used, it shall be noted in the test report.

5.2 Temperature

The ambient fluid and the component under test shall be maintained at 23 °C ± 10 °C during all the tests.

© ISO 2024 – All rights reserved

Documents
Document Sharing Hub
Full document details: BS ISO 6953-2:2024

5.3 Pressures

The specified pressures shall be maintained within ±2 %.

5.4 Inlet pressure

The inlet pressure used for testing shall be the lower of the following pressures:

— the maximum regulated pressure, $p_{2,\max}$, plus 200 kPa (2 bar);

— the specified maximum inlet pressure, $p_{1,\max}$.

5.5 Test pressures (regulated pressure)

The preferential test pressures are chosen as approximately equal to 20 %, 40 %, 60 %, and 80 % of the upper limit of the recommended adjustable pressure range.

6 Test procedure to verify rated pressure

6.1 Perform this test on three random samples if a single-rated pressure is proposed for the entire product or on six random samples if separate ratings are proposed for the inlet and outlet sections. If the product uses a diaphragm, modify or replace it to withstand the pressure applied (diaphragms are excluded from the test criteria, but not the diaphragm support plates or any piston). Other product sealing means can be modified to prevent leakage and allow structural failure to occur during the test, but modifications shall not increase the structural strength of the pressure-containing envelope. For relieving regulators, the relieving system shall be blocked.

6.2 Prepare the test samples as follows:

a) If a single pressure rating is proposed for the entire product, remove the control spring and replace it with a solid spacer whose length maintains the poppet in its approximately half-open position. Close the gauge ports and the inlet port with plugs, and perform all testing by applying pressure to the outlet port. For relieving regulators, the relieving system shall be blocked.

b) If a separate pressure rating is proposed for the inlet and outlet sections of the regulator, relieve the control spring force on three of the samples. Using a proposed pressure rating for the inlet, perform testing on the inlet port, allowing the poppet to be closed and keeping the outlet port open. Prepare the other three samples as described in 6.2 a) and test them using a proposed pressure rating for the outlet port.

6.3 The test shall be done with a liquid which does not exceed ISO VG 32 according to ISO 3448 or with compressed air. Maintain the temperature given in 5.2. When using a compressible medium, exercise safety precautions to contain an explosive failure.

6.4 After stabilizing the temperature, slowly pressurize to a level of one-half its proposed rated pressure. Hold at this level for 2 min and observe for leakage or failure, as defined in 6.5.

6.4.1 For products constructed of light alloys, brass, and steel, continue raising the pressure until a level of four times the proposed rated pressure has been reached.

6.4.2 For products constructed of zinc, die cast alloys, or plastics:

— with design operating temperatures of up to 50 °C, continue raising the pressure until a level of four times the proposed rated pressure has been reached;

— with design operating temperature between 50 °C to 80 °C, continue raising the pressure until a level of five times the proposed rated pressure has been reached.

© ISO 2024 – All rights reserved

AVA Documents
Document Sharing Hub

Full document details: BS ISO 6953-2:2024

6.5 The criteria for a failure are: a fracture, separation of parts, or a crack, or that which can allow enough liquid to pass across the pressure-containing envelope to wet the outer surface. Leakage across the port threads shall not constitute a failure, unless caused by a fracture or a crack.

6.6 The proposed rated pressure is verified if all three samples pass their respective tests.

6.7 Where a unit or sub-assembly in the unit (e.g. reservoir sight glass) is constructed of different materials, the higher appropriate factor should be used. The applied pressure can be restricted to the area of the interface between the different materials.

6.8 Where the pressure-containing envelope design is covered by a pressure vessel code in the market of sale, the requirements of that code take precedence over the requirements stated in this document.

7 Flow characteristics tests

7.1 Test installation

A suitable test circuit as shown in Figure 1 shall be used for measuring forward or relief flow rates. This test circuit combines:

— the constant upstream pressure (in-line) test circuit, as described in ISO 6358-1 for characterizing the components with upstream and downstream pressure-measuring tubes and transition connectors (used for forward flow rate measurements), and

— the variable upstream pressure (exhaust-to-atmosphere) test circuit, as described in ISO 6358-1 (used for relief flow rate measurements).

© ISO 2024 – All rights reserved

Documents
Document Sharing Hub
Full document details: BS ISO 6953-2:2024

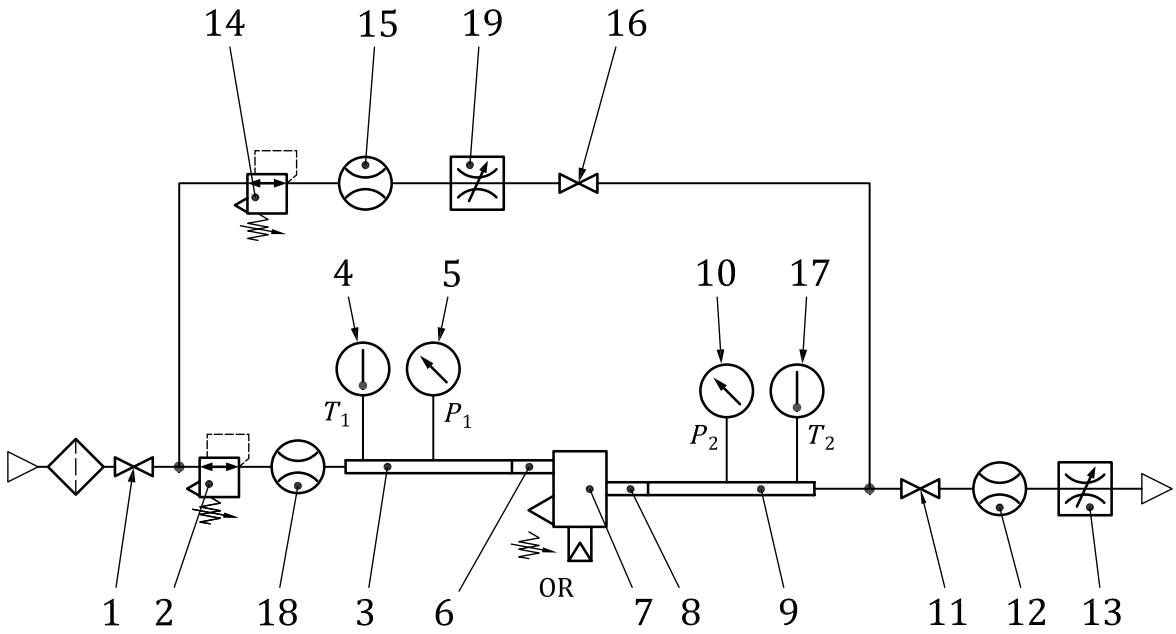

Key

1 inlet shut-off valve
2 inlet pressure regulator
3 pressure-measuring tube
4 inlet temperature, T_1, measuring-element
5 inlet pressure, p_1, gauge or transducer
6 transition connector
7 component under test
8 transition connector
9 pressure-measuring tube
10 regulated pressure, p_2, gauge or transducer
11 ball valve
12 forward flow meter
13 flow control valve (for forward flow rates)
14 pressure regulator (for relief flow rates)
15 relief flow meter
16 ball valve
17 temperature, T_2, measuring-element (for relief flow rates)
18 flow meter
19 flow control valve (for relief flow rate)

NOTE Item 18 is optional for measuring forward flow rates but only for non-bleeding regulators.

Figure 1 — Test circuit for flow rate-pressure characterization

7.2 General requirements

7.2.1 The component under test (key reference 7 in Figure 1) shall be located in the test circuit so as to connect its inlet port to the upstream transition connector and pressure-measuring tube. Its outlet port is connected to a transition connector and a pressure-measuring tube enabling a measurement of the regulated pressure, p_2. For the relief flow test, air passes through the vent passages to the atmosphere.

7.2.2 Pressure-measuring tubes (key references 3 and 9 in Figure 1) and transition connectors (key references 6 and 8) shall be in accordance with ISO 6358-1.

7.2.3 The components shown as 1, 2, 3, 4, 5, and 6 in Figure 1 correspond to the upstream part of the test circuit used for forward flow measurements. These components shall remain in place for the relief flow rate measurements, and the inlet port of the component under test shall be pressurized from the supply circuit.

7.2.4 Components shown as 8, 9, 10, 11, 12, and 13 in Figure 1 correspond to the downstream part of the test circuit used for forward flow rate measurements.

© ISO 2024 – All rights reserved

Documents
Document Sharing Hub
Full document details: BS ISO 6953-2:2024

7.2.5 Components shown as 14, 15, 19, 16, 9, 10, 17, and 8 in Figure 1 correspond to the upstream part of the test circuit used for relief flow rate measurements.

7.2.6 The sonic conductance of the pressure regulator (2), ball valve (11) and maximal sonic conductance of the flow control valve (13) in Figure 1 should each be at least twice the forward sonic conductance of the component under test. The sonic conductance of the pressure regulator (14), maximal sonic conductance of the flow control valve (19) and ball valve (16) should each be at least twice the relief sonic conductance of the component under test.

7.3 Test procedures

7.3.1 Initial test procedure

7.3.1.1 Install the regulator according to Figure 1, with shut-off valve (1), ball valves (11 and 16), and flow control valve (13) closed.

7.3.1.2 Open shut-off valve (1) and adjust pressure regulator (2) to apply an inlet pressure, p_1, chosen according to 5.4. During every measurement concerning the static tests described in 7.3.2, 7.3.3, and 7.3.4, the inlet pressure shall be maintained within the tolerance specified in 5.3 [this can require constant readjustment of regulator (2)].

7.3.1.3 Increase the set pressure on the component under test until it reaches the regulated pressure value, p_2, corresponding to 20 % of the regulated pressure full scale.

7.3.1.4 Follow successively the procedure described in 7.3.2 for forward flow rates and then the procedure described in 7.3.3 for relief flow rates.

7.3.2 Forward flow rate-pressure characteristics test

7.3.2.1 Open the ball valve (11 in Figure 1). Then, slowly open the flow control valve (13) and let a low flow rate of air pass through the component under test.

7.3.2.2 When the flow is steady, measure the forward flow rate using the flow meter (12), the corresponding regulated pressure, p_2, using the pressure transducer (10) and the inlet temperature, T_1.

7.3.2.3 Continue the measurements by gradually increasing the flow rate in steps, recording data after conditions in each step are stable. Continue this process until the maximum flow rate is achieved in the test circuit. Measure additional data for a decreasing forward flow rate, also in steps, until the flow is near zero (item 13 is closed). During the variations of the forward flow (increasing and decreasing), keep the inlet pressure, p_1, within the tolerance specified in 5.3.

7.3.3 Relief flow rate-pressure characteristics test

7.3.3.1 Open completely the flow control valve (19 in Figure 1). Set the pressure regulator (14) at the same pressure value as the regulated pressure value of the component under test, obtained without flow at the end of the procedure described in 7.3.2.3. Close the ball valve (11) and open the ball valve (16) to apply this pressure on the outlet side of the component under test. Air can begin to flow through the relief outlet of the test regulator.

7.3.3.2 Increase the regulated pressure slightly using the pressure regulator (14 in Figure 1). When the flow is steady, measure the relief flow using the flow meter (15), the corresponding regulated pressure, p_2, using the pressure transducer (10) and temperature, T_2.

© ISO 2024 – All rights reserved

Documents
Document Sharing Hub
Full document details: BS ISO 6953-2:2024

7.3.3.3 Continue the measurements by gradually increasing the flow rate in steps [by increasing the pressure using pressure regulator (14)]. Record data after conditions stabilize after each step. Continue this until the pressure reaches a level of the inlet pressure according to 5.4. Measure additional data for a decreasing pressure until the flow rate reaches zero. During variations of the relief flow (increasing and decreasing), keep the inlet pressure, p_1, within the tolerance of 5.3.

7.3.3.4 Close ball valve (16) before continuing to the next step.

7.3.3.5 This test procedure can be substituted by adjusting the flow control valve (19) instead of the pressure regulator (14). In this case, follow points from 7.3.3.6 to 7.3.3.9.

7.3.3.6 Close the ball valve (11) and open the ball valve (16). With flow controller (19) closed, set the pressure regulator (14) at the full-scale value of the component under test while the regulated pressure value of the component under test, p_2, shall be at the same value obtained without flow at the end of the procedure described in 7.3.2.3

7.3.3.7 Slowly open the flow control valve (19) and let a low flow rate of air passes through the component under test. When the flow is steady, measure the relief flow using the flow meter (15), the corresponding regulated pressure, p_2, using the pressure transducer (10) and temperature, T_2.

7.3.3.8 Continue the measurements by gradually increasing the flow rate in steps. Record data after conditions stabilize after each step. Continue this until the pressure reaches the full-scale value. Measure additional data for a decreasing pressure until the flow rate reaches zero. During variations of the relief flow (increasing and decreasing), keep the inlet pressure, p_1, within the tolerance of 5.3.

7.3.3.9 Close ball valve (16) before continuing to the next step.

7.3.4 Procedure for other regulated pressure values

Repeat the procedures for measuring forward flow rate (7.3.2) and relief flow rate (7.3.3) for regulated values corresponding to about 40 %, 60 %, and 80 % of the regulated pressure full scale. Make these settings without flow, gradually adjusting the regulator by increasing values only, until reaching these values. If a pressure setting needs to be adjusted downwards, reduce the pressure well below the desired value and increase the pressure to the desired setting.

7.4 Calculation of characteristics

7.4.1 Flow rate-pressure characteristic curves

7.4.1.1 For the regulated set pressure which is equal to 20 % of the regulated pressure full scale, for each forward flow rate value, calculate the mean value of the two corresponding regulated pressures, p_2, measured according to the procedure described in 7.3.2 respectively with increasing and decreasing forward flow rates.

Plot a graph of the mean regulated pressure values as a function of the forward flow rate, as shown in the first quadrant of Figure 2.

7.4.1.2 For the regulated set pressure which is equal to 20 % of the regulated pressure full scale, for each relief flow rate value, calculate the mean value of the two corresponding regulated pressures, p_2, measured according to the procedure described in 7.3.3 respectively, with increasing and decreasing relief flow rates.

Plot a graph of the mean regulated pressure values as a function of the relief flow rate, as shown in the second quadrant of Figure 2.

7.4.1.3 Repeat the procedure of calculation and layout for the three other regulated set pressure values: 40 %, 60 %, and 80 % of the full scale.

© ISO 2024 – All rights reserved

Documents
Document Sharing Hub

Full document details: BS ISO 6953-2:2024