BS ISO 7148-2:2012

BSI Standards Publication

Plain bearings — Testing of the tribological behaviour of bearing materials

Part 2: Testing of polymer-based bearing materials

bsi.

...making excellence a habit.™

Document Sharing Hub

Full document details: BS ISO 7148-2:2012

National foreword

This British Standard is the UK implementation of ISO 7148-2:2012. It supersedes BS ISO 7148-2:1999, which is withdrawn.

The UK participation in its preparation was entrusted to Technical Committee MCE/12, Plain bearings.

A list of organizations represented on this committee can be obtained on request to its secretary.

This publication does not purport to include all the necessary provisions of a contract. Users are responsible for its correct application.

© The British Standards Institution 2012.
Published by BSI Standards Limited 2012l.

ISBN 978 0 580 71542 6

ICS 21.100.10

Compliance with a British Standard cannot confer immunity from legal obligations.

This British Standard was published under the authority of the Standards Policy and Strategy Committee on 31 October 2012.

Amendments issued since publication

Date	Text affected

Documents
Document Sharing Hub

Full document details: BS ISO 7148-2:2012

INTERNATIONAL STANDARD

ISO 7148-2

Second edition
2012-10-01

Plain bearings — Testing of the tribological behaviour of bearing materials —

Part 2: Testing of polymer-based bearing materials

Paliers lisses — Essai du comportement tribologique des matériaux antifriction —

Partie 2: Essai des matériaux pour paliers à base de polymère

Reference number
ISO 7148-2:2012(E)

Documents
Document Sharing Hub

© ISO 2012

Full document details: BS ISO 7148-2:2012

COPYRIGHT PROTECTED DOCUMENT

© ISO 2012

All rights reserved. Unless otherwise specified, no part of this publication may be reproduced or utilized in any form or by any means, electronic or mechanical, including photocopying and microfilm, without permission in writing from either ISO at the address below or ISO's member body in the country of the requester.

ISO copyright office
Case postale 56 • CH-1211 Geneva 20
Tel. + 41 22 749 01 11
Fax + 41 22 749 09 47
E-mail copyright@iso.org
Web www.iso.org

Published in Switzerland

© ISO 2012 – All rights reserved

Documents
Document Sharing Hub

Full document details: BS ISO 7148-2:2012

Contents

Page

Foreword ... **iv**

1 Scope ... **1**

2 Normative references ... **1**

3 Symbols, units and abbreviated terms ... **1**

4 Special features for the tribological testing of polymer-based materials ... **2**

5 Test methods ... **5**
5.1 General ... 5
5.2 Test method A — Pin-on-disc ... 5
5.3 Test method B — Block (or pin)-on-ring ... 6
5.4 Test method C — Plain bearing-on-shaft ... 7
5.5 Test method D — Sphere-on-prism ... 7
5.6 Test method E — Rotation under thrust load ... 8

6 Test specimens ... **9**
6.1 Data required ... 9
6.2 Polymer-based plain bearing materials (pl) ... 9
6.3 Materials of mating component ... 9
6.4 Dimensions of test specimens ... 9
6.5 Preparation of the test specimens ... 14

7 Test methods and test equipment ... **15**
7.1 General ... 15
7.2 Test method A — Pin-on-disc ... 15
7.3 Test method B — Block-on-ring ... 16
7.4 Test method C — Plain bearing-on-shaft ... 16
7.5 Test method D — Sphere-on-prism ... 16
7.6 Test method E — Rotation under thrust load ... 17

8 Lubrication ... **17**
8.1 General ... 17
8.2 Dry (dr) ... 18
8.3 Grease (gr) ... 18
8.4 Oil (oi) ... 18
8.5 Solid lubricant (so) ... 18

9 Designation ... **18**

10 Test conditions ... **18**
10.1 Environmental conditions ... 18
10.2 Mounting of the test specimens ... 19
10.3 Test variables ... 19

11 Test procedure ... **21**
11.1 Running-in ... 21
11.2 Carrying out the tests ... 21

12 Analysis ... **21**
12.1 General ... 21
12.2 Test results ... 22

Annex A (informative) **Test report** ... **23**

Bibliography ... **25**

© ISO 2012 – All rights reserved

Documents
Document Sharing Hub
Full document details: BS ISO 7148-2:2012

Foreword

ISO (the International Organization for Standardization) is a worldwide federation of national standards bodies (ISO member bodies). The work of preparing International Standards is normally carried out through ISO technical committees. Each member body interested in a subject for which a technical committee has been established has the right to be represented on that committee. International organizations, governmental and non-governmental, in liaison with ISO, also take part in the work. ISO collaborates closely with the International Electrotechnical Commission (IEC) on all matters of electrotechnical standardization.

International Standards are drafted in accordance with the rules given in the ISO/IEC Directives, Part 2.

The main task of technical committees is to prepare International Standards. Draft International Standards adopted by the technical committees are circulated to the member bodies for voting. Publication as an International Standard requires approval by at least 75 % of the member bodies casting a vote.

Attention is drawn to the possibility that some of the elements of this document may be the subject of patent rights. ISO shall not be held responsible for identifying any or all such patent rights.

ISO 7148-2 was prepared by Technical Committee ISO/TC 123, *Plain bearings*, Subcommittee SC 2, *Materials and lubricants, their properties, characteristics, test methods and testing conditions*.

This second edition cancels and replaces the first edition (ISO 7148-2:1999), which has been technically revised.

ISO 7148 consists of the following parts, under the general title *Plain bearings — Testing of the tribological behaviour of bearing materials*:

— *Part 1: Testing of bearing metals*

— *Part 2: Testing of polymer-based bearing materials*

© ISO 2012 – All rights reserved
Documents
Document Sharing Hub
Full document details: BS ISO 7148-2:2012

INTERNATIONAL STANDARD ISO 7148-2:2012(E)

Plain bearings — Testing of the tribological behaviour of bearing materials —

Part 2: Testing of polymer-based bearing materials

1 Scope

This part of ISO 7148 specifies tribological tests of polymer-based plain bearing materials under specified working conditions, i.e. load, sliding velocity and temperature, with and without lubrication. From the test results, data are obtained which indicate the relative tribological behaviour of metal-polymer and polymer-polymer rubbing parts.

The purpose of this part of ISO 7148 is to obtain, for polymer material combinations used in plain bearings, reproducible measured values for friction and wear under specified and exactly-defined test conditions without lubrication (dry surfaces) and with lubrication (boundary lubrication).

The test results give useful information for practical application only if all parameters of influence are identical. The more the test conditions deviate from the actual application, the greater the uncertainty of the applicability of the results.

2 Normative references

The following referenced documents are indispensable for the application of this document. For dated references, only the edition cited applies. For undated references, the latest edition of the referenced document (including any amendments) applies.

ISO 527-2, *Plastics — Determination of tensile properties — Part 2: Test conditions for moulding and extrusion plastics*

ISO 527-3, *Plastics — Determination of tensile properties — Part 3: Test conditions for films and sheets*

ISO 2818, *Plastics — Preparation of test specimens by machining*

ISO 4385, *Plain bearings — Compression testing of metallic bearing materials*

ISO 6691, *Thermoplastic polymers for plain bearings — Classification and designation*

3 Symbols, units and abbreviated terms

See Table 1.

© ISO 2012 – All rights reserved

Documents
Document Sharing Hub
Full document details: BS ISO 7148-2:2012

Table 1 — Symbols, units and abbreviated terms

Symbol	Term	Unit
A, B, C, D, E	Test method	-
a	Sliding distance	km
dr	Dry	-
f	Coefficient of friction; ratio between friction force and normal force, i.e.: $f = \frac{F_f}{F_n}$	-
F_f	Friction force	N
F_n	Normal force	N
gr	Grease	
K_w	Coefficient of wear, volumetric wear rate related to the normal force, i.e.: $K_w = \frac{V_w}{F_n \times a} = \frac{w_v}{F_n}$	$mm^3/(N \cdot km)$
l_w	Linear wear as measured by change in distance	mm
M_f	Friction moment	Nm
oi	Oil	-
$\bar{p}$	Specific force per unit area (force/projected contact area)	N/mm^2
$R_{d,B}$	Compression strength	N/mm^2
$R_{d0,2}$	Compression limit 0,2 %	N/mm^2
so	Solid lubricant	
T	Specimen's temperature near the sliding surface during testing under steady-state conditions	°C
T_{amb}	Ambient temperature	°C
T_g	Glass transition temperature	°C
T_{lim}	Maximum permissible temperature	°C
t_{Ch}	Test duration	h
U	Sliding velocity	m/s
V_W	Material removed by wear as measured by change in volume	mm^3
w_l	Linear wear rate, i.e.; $w_l = \frac{l_w}{a}$	mm/km
w_v	Volumetric wear rate, i.e.: $w_v = \frac{V_w}{a}$	mm^3/km
η	Lubricant viscosity	mPa·s

4 Special features for the tribological testing of polymer-based materials

Polymers have a low thermal conductivity and a low melting temperature, so that heat resulting from contact friction may lead to partial melting and hence feign wear. Due to the high thermal expansion of polymers (up to 10 times higher than that of steel) results obtained can be misleading because the test specimens have expanded under frictional heat. Hence allowance shall be made for the effects of thermal expansion (change of clearance) and thermal conductivity (melting) when assessing the results. Where possible the temperature of both test specimens should be controlled.

© ISO 2012 – All rights reserved
Documents
Document Sharing Hub
Full document details: BS ISO 7148-2:2012

Polymers have a glass transition temperature, T_g, which depends on their chemical structure. At this temperature, their physical properties and their tribological behaviour may change.

Injection-moulded polymer surfaces have different properties from machined surfaces. The test specimens shall be tested with the same surface conditions as they have in practical application.

Reinforcements and fillers, i.e. fibres, may lead to very strong anisotropy of the material and influence its wear behaviour depending on fibre orientation. The test specimens should have the same fibre orientation as in practical application.

In order to avoid stick-slip, the test rig shall be very stiff and shall not be susceptible to vibrations.

The tribological behaviour of polymers depends very strongly on the material combination, which part moves and which part remains stationary. The test system shall be similar to practical application.

Polymers show wear processes that are different from that of metals. There are not only abrasive processes with powder-like wear debris, but also adhesive processes with the creation of transfer layers which may be smooth or rough. Also ploughing wear and melting or plastic deformation is possible. Therefore, wear cannot be gravimetrically measured in all cases and the wear status shall be judged after the tests (whether the surfaces are fine- or coarse- grained, scored or plucked out, scaled, melted or plastically deformed).

Some polymers may show poor repeatability of the results and require repeated testing (i.e. six or more repetitions).

The preparation and preparatory treatment (e.g. conditioning, storage, cleaning) of the test specimens can have a high influence on performance.

In some thermoplastics, e.g. polyamides, moisture absorption effects a gradual change in linear dimensions and modifies their mechanical properties. Environmental parameters should, therefore, be controlled in the test array. Moisture absorption prohibits gravimetrical measurement of wear.

The more the test conditions deviate from the actual application, the greater is the uncertainty of the applicability of the results (see Figures 1 and 2).

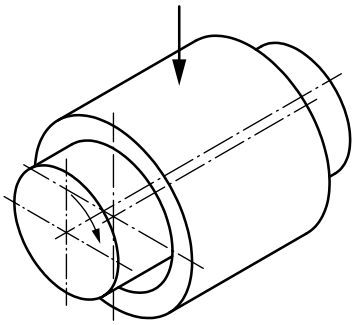

a) Plain bearing-on-shaft

© ISO 2012 – All rights reserved

Documents
Document Sharing Hub
Full document details: BS ISO 7148-2:2012

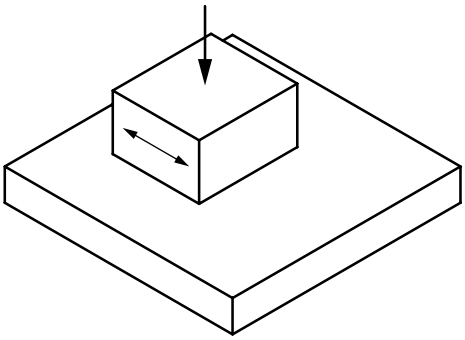

b) Linear guidance system

Figure 1 — Simulation of real rubbing contacts

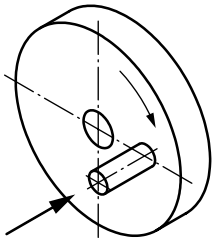

a) Pin-on-disc

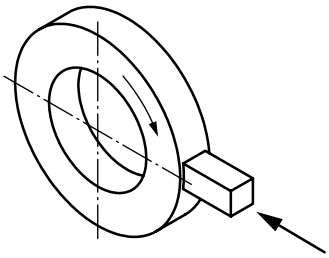

b) Block-on-ring

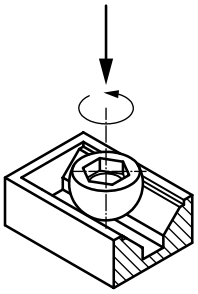

c) Sphere-on-prism

© ISO 2012 – All rights reserved
Documents
Document Sharing Hub
Full document details: BS ISO 7148-2:2012

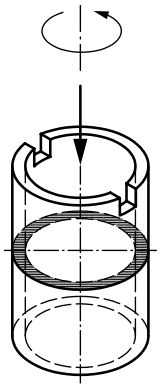

d) Rotation under thrust load — Sleeve-to-sleeve

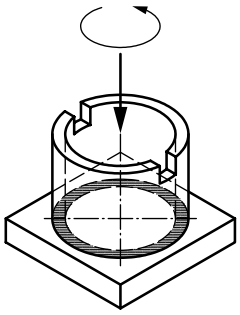

e) Rotation under thrust load — Sleeve-to-plate

Figure 2 — Simulation under approximated practical testing conditions and model systems

5 Test methods

5.1 General

Different test methods are provided for tests in accordance with this part of ISO 7148 so that the following contact geometries are available. The test methods should correspond to the practical application as closely as possible.

5.2 Test method A — Pin-on-disc

See Figure 3.

© ISO 2012 – All rights reserved

Documents
Document Sharing Hub
Full document details: BS ISO 7148-2:2012