BRITISH STANDARD

BS ISO 7176-24:2004

Wheelchairs —

Part 24: Requirements and test methods for user-operated stair-climbing devices

ICS 11.180.10

NO COPYING WITHOUT BSI PERMISSION EXCEPT AS PERMITTED BY COPYRIGHT LAW

BSI Documents
Document Sharing Hub
British Standards

Full document details: BS ISO 7176-24:2004

National foreword

This British Standard reproduces verbatim ISO 7176-24:2004 and implements it as the UK national standard.

The UK participation in its preparation was entrusted by Technical Committee CH/173, Technical systems and aids for disabled or handicapped persons, to Subcommittee CH/173/1, Wheelchairs, which has the responsibility to:

— aid enquirers to understand the text;

— present to the responsible international/European committee any enquiries on the interpretation, or proposals for change, and keep the UK interests informed;

— monitor related international and European developments and promulgate them in the UK.

A list of organizations represented on this subcommittee can be obtained on request to its secretary.

Cross-references

The British Standards which implement international publications referred to in this document may be found in the *BSI Catalogue* under the section entitled "International Standards Correspondence Index", or by using the "Search" facility of the *BSI Electronic Catalogue* or of British Standards Online.

This publication does not purport to include all the necessary provisions of a contract. Users are responsible for its correct application.

Compliance with a British Standard does not of itself confer immunity from legal obligations.

Summary of pages

This document comprises a front cover, an inside front cover, the ISO title page, pages ii to vi, pages 1 to 84, an inside back cover and a back cover.

The BSI copyright notice displayed in this document indicates when the document was last issued.

This British Standard was published under the authority of the Standards Policy and Strategy Committee on 29 November 2004

Amendments issued since publication

Amd. No.	Date	Comments

© BSI 29 November 2004

ISBN 0 580 44908 4

Documents
Document Sharing Hub

Full document details: BS ISO 7176-24:2004

INTERNATIONAL STANDARD

ISO 7176-24

First edition
2004-10-15

Wheelchairs —

Part 24:
Requirements and test methods for user-operated stair-climbing devices

Fauteuils roulants —

Partie 24: Exigences et méthodes d'essai pour les monte-escalier manipulés par l'utilisateur

Reference number
ISO 7176-24:2004(E)

Documents
Document Sharing Hub

Full document details: BS ISO 7176-24:2004

Documents
Document Sharing Hub
Full document details: BS ISO 7176-24:2004

Contents

Page

Foreword ... iv
Introduction ... vi
1 **Scope** ... 1
2 **Normative references** ... 1
3 **Terms and definitions** ... 2
4 **Performance requirements** ... 6
5 **Test apparatus** ... 10
6 **Preparation of the stair-climbing device** ... 14
7 **Test conditions** ... 17
8 **Skew angle** ... 17
9 **Braking effectiveness** ... 20
10 **Static stability** ... 22
11 **Dynamic Stability** ... 24
12 **Step transition safety** ... 29
13 **Static, impact and fatigue strength** ... 31
14 **Climatic safety** ... 37
15 **Electromagnetic compatibility** ... 38
16 **Required safety equipment** ... 39
17 **Test report** ... 43
18 **Labelling and documentation** ... 43
Annex A (normative) **Types of stair-climbing devices with typical representations** ... 46
Annex B (informative) **Recommended safety equipment** ... 49
Annex C (normative) **Surrogate wheelchair** ... 50
Annex D (normative) **Determination of maximum recommended speed** ... 52
Annex E (normative) **Configuration and position of stair-climbing devices for stability tests** ... 54
Annex F (normative) **Escalator test machine** ... 71
Annex G (normative) **Determination of outer dimensions and operating area** ... 72
Annex H (normative) **Determination of theoretical energy consumption** ... 80
Annex I (normative) **Distinction between smaller and larger clusters** ... 82

Documents
Document Sharing Hub

Full document details: BS ISO 7176-24:2004

Foreword

ISO (the International Organization for Standardization) is a worldwide federation of national standards bodies (ISO member bodies). The work of preparing International Standards is normally carried out through ISO technical committees. Each member body interested in a subject for which a technical committee has been established has the right to be represented on that committee. International organizations, governmental and non-governmental, in liaison with ISO, also take part in the work. ISO collaborates closely with the International Electrotechnical Commission (IEC) on all matters of electrotechnical standardization.

International Standards are drafted in accordance with the rules given in the ISO/IEC Directives, Part 2.

The main task of technical committees is to prepare International Standards. Draft International Standards adopted by the technical committees are circulated to the member bodies for voting. Publication as an International Standard requires approval by at least 75 % of the member bodies casting a vote.

Attention is drawn to the possibility that some of the elements of this document may be the subject of patent rights. ISO shall not be held responsible for identifying any or all such patent rights.

ISO 7176-24 was prepared by Technical Committee ISO/TC 173, *Technical systems and aids for disabled or handicapped persons*, Subcommittee SC 1, *Wheelchairs*.

ISO 7176 consists of the following parts, under the general title *Wheelchairs*:

— *Part 1 Determination of static stability*

— *Part 2 Determination of dynamic stability of electric wheelchairs*

— *Part 3 Determination of effectiveness of brakes*

— *Part 4 Energy consumption of electric wheelchairs and scooters for determination of theoretical distance range*

— *Part 5 Determination of overall dimensions, mass and turning space*

— *Part 6 Determination of maximum speed, acceleration and deceleration of electric wheelchairs*

— *Part 7 Measurement of seating and wheel dimensions*

— *Part 8 Requirements and test methods for static, impact and fatigue strengths*

— *Part 9 Climatic tests for electric wheelchairs*

— *Part 10 Determination of obstacle-climbing ability of electric wheelchairs*

— *Part 11 Test dummies*

— *Part 13 Determination of coefficient of friction of test surfaces*

— *Part 14 Power and control systems for electric wheelchairs — Requirements and test methods*

— *Part 15 Requirements for information disclosure, documentation and labelling*

— *Part 16 Resistance to ignition of upholstered parts — Requirements and test methods*

Documents
Document Sharing Hub

Full document details: BS ISO 7176-24:2004

— *Part 19 Wheeled mobility devices for use in motor vehicles*

— *Part 21 Requirements and test methods for electromagnetic compatibility of electrically powered wheelchairs and motorized scooters*

— *Part 22 Set-up procedures*

— *Part 23 Requirements and test methods for attendant-operated stair-climbing devices*

— *Part 24: Requirements and test methods for user-operated stair-climbing devices*

— *Part 26: Vocabulary*

Documents
Document Sharing Hub

Full document details: BS ISO 7176-24:2004

Introduction

This part of ISO 7176 is written as a response to the need for a common language in the field of stair-climbing devices, to give a means of evaluating important safety issues, and to establish a means of qualifying and quantifying the performance of user-operated stair-climbing devices under the various conditions and environments encountered in their operation. Other relevant wheelchair standards of the ISO 7176 series might be applicable to stair-climbing devices that can also be used as wheelchairs. This allows users and manufacturers to compare the pertinent safety and utility issues of all functions and features of a given stair-climbing device.

The tests given in this part of ISO 7176 are used to gather comparative information about factors relating to the safety and performance of a user-operated stair-climbing device whilst in climbing mode on stairs and in climbing mode or crawling mode on landings as well as in driving mode on level ground. They include identification of suitable operating environments for each device and indications of various performance criteria in climbing mode for on-stairs operations and on level ground.

This part of ISO 7176 specifies tests for the “reference configuration” of the stair-climbing device. Since some stair-climbing devices have adjustable components and/or alternative parts, testing in different configurations may be needed to determine if a given variation conforms to this part of ISO 7176.

This part of ISO 7176 calls for the use of procedures that may be injurious to health if adequate precautions are not taken. It refers only to technical suitability and does not absolve the manufacturer or test house from legal obligations relating to health and safety at any stage.

A Technical Report, ISO/TR 13570:2001, *Guidelines for the application of the ISO 7176 series on wheelchairs*, is also available giving a simplified explanation of these parts of ISO 7176.

Documents
Document Sharing Hub
Full document details: BS ISO 7176-24:2004

Wheelchairs —

Part 24:
Requirements and test methods for user-operated stair-climbing devices

1 Scope

This part of ISO 7176 is applicable to user-operated stair-climbing chairs and user-operated stair-climbing wheelchair carriers where the stair-climbing device climbs backwards up the stairs, with the user facing downstairs, and climbs down the stairs in a forward position with the user facing downstairs.

This part of ISO 7176 specifies requirements and test methods for electrically powered stair-climbing devices that are user-operated. It also includes ergonomic, labelling and disclosure requirements.

This part of ISO 7176 specifies tests to demonstrate the stair-climbing device's ability to perform safely on stairs with a pitch of 35° or higher, if claimed by the manufacturer.

NOTE Attendant-driven stair-climbing devices are dealt with in ISO 7176-23.

2 Normative references

The following referenced documents are indispensable for the application of this document. For dated references, only the edition cited applies. For undated references, the latest edition of the referenced document (including any amendments) applies.

ISO 3880-1, *Building Construction — Stairs — Vocabulary*

ISO 7176-1, *Wheelchairs — Part 1: Determination of static stability*

ISO 7176-2:2001, *Wheelchairs — Part 2: Determination of dynamic stability of electric wheelchairs*

ISO 7176-3, *Wheelchairs — Part 3: Determination of effectiveness of brakes*

ISO 7176-4, *Wheelchairs — Part 4: Energy consumption of electric wheelchairs and scooters for determination of theoretical distance range*

ISO 7176-5, *Wheelchairs — Part 5: Determination of overall dimensions, mass and turning space*

ISO 7176-6:2001, *Wheelchairs — Part 6: Determination of maximum speed, acceleration and deceleration of electric wheelchairs*

ISO 7176-7:1998, *Wheelchairs — Part 7: Measurement of seating and wheel dimensions*

ISO 7176-8:1998, *Wheelchairs — Part 8: Requirements and test methods for static, impact and fatigue strengths*

ISO 7176-9, *Wheelchairs — Part 9: Climatic tests for electric wheelchairs*

ISO 7176-11, *Wheelchairs — Part 11: Test dummies*

Documents
Document Sharing Hub

Full document details: BS ISO 7176-24:2004

ISO 7176-13, *Wheelchairs — Part 13: Determination of coefficient of friction of test surfaces*

ISO 7176-14:1997, *Wheelchairs — Part 14: Power and control systems for electric wheelchairs — Requirements and test methods*

ISO 7176-15, *Wheelchairs — Part 15: Requirements for information disclosure, documentation and labelling*

ISO 7176-16:1997, *Wheelchairs — Part 16: Resistance to ignition of upholstered parts — Requirements and test methods*

ISO 7176-21:2003, *Wheelchairs — Part 21: Requirements and test methods for electromagnetic compatibility of electrically powered wheelchairs and motorized scooters*

ISO 7176-22, *Wheelchairs — Part 22: Set-up procedures*

3 Terms and definitions

For the purposes of this document, the terms and definitions given in ISO 3880-1, ISO 7176-7, ISO 7176-15 and the following apply.

3.1
stair-climbing device
non-fixed device intended to transport a person and/or occupied wheelchair by climbing up or down stairs

NOTE A hierarchic system of various types of stair-climbing devices is given in Annex A.

3.2
user-operated stair-climbing device
stair-climbing device operated by the user while seated in it

3.3
self-standing (adjective)
stable while at rest on a surface (test plane, stairs or landing) when subjected only to the force of gravity

3.4
balancing (adjective)
maintaining a position of unstable equilibrium through the application of other forces in addition to the force of gravity

3.5
stair-climbing chair
stair-climbing device that includes a seat for the user

3.6
stair-climbing wheelchair carrier
stair-climbing device that carries an occupied wheelchair

3.7
docking system
means of attaching a wheelchair to a stair-climbing wheelchair carrier

3.8
climbing
ascending or descending stairs

Documents
Document Sharing Hub
Full document details: BS ISO 7176-24:2004

3.9
driving
performing wheelchair functions with electric power

NOTE 1 Typical wheelchair functions provide wheeled mobility over level ground, moderate slopes and small obstacles.

NOTE 2 Some stair-climbing chairs and some stair-climbing wheelchair carriers include such wheelchair functions.

3.10
crawling
moving on landings

NOTE Any means by which a stair-climbing device provides for moving on landings is considered crawling, including: manual propulsion, power-assisted manual propulsion and driving. Using the climbing mechanism to move on a landing is also considered crawling.

3.11
winding stairs
stairs built in a curved construction

3.12
user
person being transported in and operating the stair-climbing device

3.13
U-shaped stairs
two stairs at an angle of 180° to each other and connected by an intermediate landing

3.14
skew angle
angle of deviation between the pitch line of the stairs and the longitudinal axis of the stair-climbing device when viewed from above

3.15
minimum reserve battery charge
minimum battery charge sufficient for ascending a minimum of 20 steps and descending a minimum of 20 steps when loaded with the maximum load

3.16
external force
force that acts on the system consisting of a stair-climbing device, a test wheelchair (if used) and the user

EXAMPLE To apply forces by holding onto handrails.

3.17
climbing mode exit restriction
means that prevent the movement of a stair-climbing device by an operational mode other than climbing mode whilst on stairs

3.18
safe stairs indicator
means used to assess whether stairs are safe to climb

3.19
cluster
type of climbing mechanism where some cams revolve around the central axis of the cluster

NOTE The usual number of cams in a cluster ranges from 2 to 5. Some examples of types of clusters are shown in Figure 1.

AVA Documents
Document Sharing Hub

Full document details: BS ISO 7176-24:2004

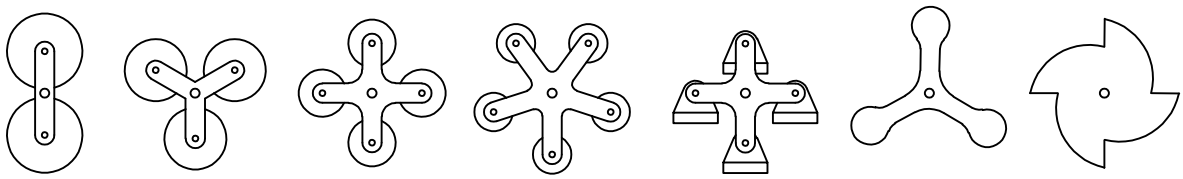

Figure 1 —Examples of clusters

3.20
cam
that part of the cluster which is intended to come into contact with the stairs or the ground

NOTE If the cam is a wheel, it could be freely rotating or have unidirectional freewheel function or be temporarily braked or even driven. If the cam is an eccentric or notch, it usually has a nearly circular or spiral shape of varying diameter. Some cams may consist of hinged posts or “shoes”.

3.21
adverse situation
any situation that is likely to cause harm to the user, attendant or nearby person

NOTE Ths includes tipping, sliding, tumbling, squeezing, trapping or any other situation that is reasonably considered to be dangerous.

3.22
front vertical plane
vertical plane that is perpendicular to the horizontal component of forward direction of travel and tangential to the most forward point of the climbing mechanism when the stair-climbing device is in its climbing mode and positioned on stairs with a pitch of 30° ± 5°

See Figure 2.

3.23
rear vertical plane
vertical plane that is perpendicular to the horizontal component of forward direction of travel and tangential to the most backward point of the climbing mechanism when the stair-climbing device is in climbing mode and positioned on stairs with a pitch of 30° ± 5°

See Figure 2.

3.24
side vertical plane
vertical plane that is parallel to the horizontal component of forward direction of travel and tangential to the outermost point of the stair-climbing device when in climbing mode with its seat reclined and positioned on stairs with a pitch of 30° ± 5°

See Figure 2.

Documents
Document Sharing Hub
Full document details: BS ISO 7176-24:2004

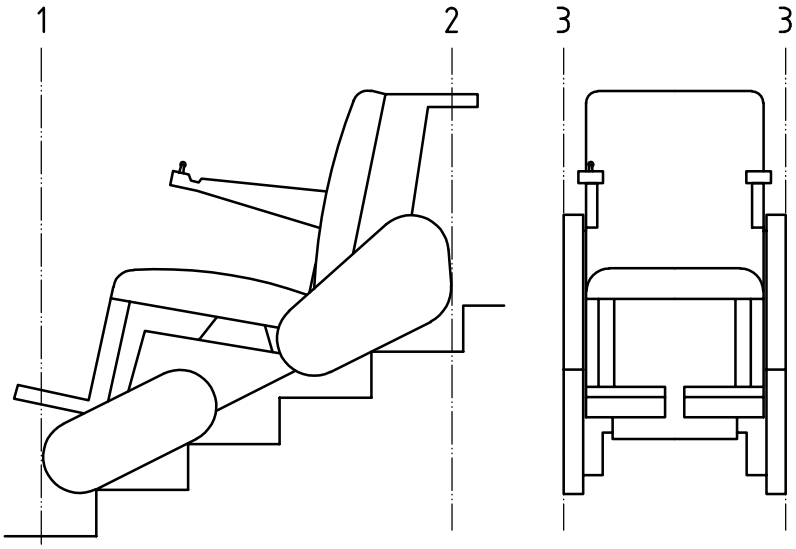

Key

1 front vertical plane

2 rear vertical plane

3 side vertical plane

Figure 2 — Reference planes

3.25
speed
mean velocity of a stair-climbing device as it moves along the pitch of the stairs whilst climbing

3.26
exaggerated test set-up
configuration of the stair-climbing device under test when the stair-climbing device is in its least stable configuration with respect to the test direction for each test that simulates foreseeable adverse behaviour of the user

NOTE Foreseeable adverse behaviour of the user is considered to be either: leaning forward in a situation where the stair-climbing device is at its least stable position and most sensitive to forward or downward stability or placing a backpack at the backrest of the stair-climbing device in a situation where it is at its least stable position and most sensitive to backward or upward stability.

3.27
tread
horizontal part or upper surface of a step

3.28
going
horizontal distance between the nosings of two consecutive steps, measured perpendicular to the lower nosing

3.29
rise
vertical distance between two consecutive steps

3.30
upper transition
transition between the stairs and the upper landing

AVA Documents
Document Sharing Hub

Full document details: BS ISO 7176-24:2004

3.31
lower transition
transition between the stairs and the lower landing

3.32
least stable configuration
set-up of the stair-climbing device that gives least stability in the test direction

3.33
least stable position
placement of the stair-climbing device on the stairs that gives least stability in the test direction

3.34
reversing width (type 1)
minimum distance between two vertical and parallel walls between which an occupied stair-climbing device with full differential steering can turn 180° with one single and smooth turning manoeuvre when in driving mode

3.35
reversing width (type 2)
minimum distance between two vertical and parallel walls between which an occupied stair-climbing device with direct steering or limited differential steering can turn 180° with one initial forward drive, one single backward drive and one final forward drive when in driving mode

3.36
minimum outer stair radius
smallest possible distance from the central axis of the winding test stairs to that point of the outer excursion of the stair-climbing device, which is most remote from the centre of the stairs while climbing winding stairs

3.37
minimum inner stair radius
smallest possible distance from the central axis of the winding test stairs to that point of the inner excursion of the stair-climbing device, which is nearest to the centre of the stairs while climbing winding stairs

4 Performance requirements

4.1 Skew angle

Stair-climbing devices cannot always approach or be positioned on stairs with perfect axial alignment and therefore all stair-climbing devices shall be able to accommodate skew angle operations.

When tested in accordance with Clause 8, all stair-climbing devices shall achieve a score of 2 or more (see Table 1), either by the stair-climbing device correcting the skew angle automatically or by continuing to climb safely at skew angle.

4.2 Braking effectiveness

When tested in accordance with Clause 9, no brake failure, notable loss of traction or instability, nor the occurrence of any other adverse situation shall occur.

4.3 Static stability

When tested in accordance with 10.2.2.2 (climbing mode) and 10.2.2.3 (crawling mode), the minimum performance value shall be 7° in forwards, backwards and sideways directions. If the manufacturer claims that the stair-climbing device is capable of negotiating sloped landings, the minimum performance value shall be 7° above the claimed angle in forwards, backwards and sideways directions.

Documents
Document Sharing Hub
Full document details: BS ISO 7176-24:2004

NOTE 1 The angle of 7° is the safety margin.

NOTE 2 The static stability of stair-climbing devices, when in driving mode, may be determined in accordance with 10.2.2.4, although there is no performance requirement.

When tested in accordance with 10.2.3, the stair-climbing device shall remain in a stable position on the straight test stairs without the occurrence of any adverse situation. If the stair-climbing device rolls into another stable position during testing, this shall be deemed to be acceptable.

4.4 Dynamic stability

When tested in accordance with 11.2.2, a score of 2 or more as given in Table A.1 of ISO 7176-2:2001 shall be achieved.

When tested in accordance with 11.2.3, a score of 2 or more as given in Table 1 (see 8.3) shall be achieved.

4.5 Step transition safety

When tested in accordance with Clause 12, the stair-climbing device shall remain stable and shall not induce potential harm to the user or damage to the stairs or to the stair-climbing device.

4.6 Static, impact and fatigue strength

After testing in accordance with Clause 13, the stair-climbing device and the connection(s) between the stair-climbing device and the test wheelchair (where applicable) shall meet all the following requirements.

a) The stair-climbing device shall be capable of operating as described by the manufacturer.

b) No component shall be fractured or have visible cracks.

NOTE Cracks in surface finishes, such as paint, which do not extend into the structural material do not constitute a failure.

c) No nut, bolt, screw, locking pin, adjustable component or similar item shall have become detached after having been tightened, adjusted or replaced once, with the exception that the footrests may be adjusted after each of the two footrest impact tests carried out in accordance with ISO 7176-8.

d) No electrical connector shall be displaced or disconnected.

e) All parts intended to be removable, foldable or adjustable shall operate as described by the manufacturer.

f) All power-operated systems shall operate as described by the manufacturer and all attachable parts shall be attachable/detachable as intended by the manufacturer.

g) Handgrips shall not be displaced.

h) No multi-position or adjustable component shall be displaced from the pre-set position, except as permitted in c).

i) No component or assembly of parts shall exhibit gross deformation, free play or loss of adjustment that adversely affects the function of the stair-climbing device.

4.7 Climatic safety

After testing in accordance with Clause 14, the stair-climbing device shall continue to function properly.

AVA Documents
Document Sharing Hub

Full document details: BS ISO 7176-24:2004

4.8 Power and control systems

All stair-climbing devices shall conform to ISO 7176-14, with the following modifications and additions.

a) The stair-climbing device shall be prepared for testing as described in Clause 6, with the exception that the tests shall be carried out without a test wheelchair, test dummy or human test person having been loaded.

b) All tests shall be carried out at maximum recommended speed (see 6.5.2).

c) The stair-climbing device shall be tested:

— on the horizontal test plane in climbing mode, in driving mode (if applicable) and in crawling mode (if applicable);

— on the straight test stairs in climbing mode.

WARNING — The tests given in ISO 7176-14 can be hazardous. It is essential that precautions be taken to protect test personnel.

d) In addition to ISO 7176-14:1997, Clause 11, list items a), b), c), d), e) and h), the following shall be included in the test report:

— a statement as to which requirements were met by the stair-climbing device, the battery and its charger;

— a statement as to which requirements were not met by the stair-climbing device, the battery and its charger;

— any reasons for terminating the test;

— any observations of relevance to the tests.

4.9 Flammability

All stair-climbing devices shall conform to ISO 7176-16, with the following modifications and additions.

a) The stair-climbing device shall be prepared for testing as described in Clause 6, with the exception that the tests shall be carried out without a test wheelchair, test dummy or human test person having been loaded.

WARNING — The tests given in ISO 7176-16 can be hazardous. It is essential that precautions be taken to protect test personnel.

b) In addition to ISO 7176-16:1997, Clause 5, the following shall be included in the test report:

— a statement as to whether the stair-climbing device met the requirements of ISO 7176-16;

— any observations of relevance to the tests.

4.10 Electromagnetic compatibility

When tested in accordance with Clause 15, the stair-climbing device shall meet the requirements of ISO 7176-21.

Documents
Document Sharing Hub
Full document details: BS ISO 7176-24:2004

4.11 Safety equipment

4.11.1 General

The stair-climbing device shall be fitted with the items of safety equipment specified in 4.11.2 to 4.11.6.

NOTE Recommendations for additional items of safety equipment (anterior thoracic supports, safe stairs indicators and headrests) are given in Annex B.

4.11.2 On/off switch

There shall be at least one means to:

— switch on the stair-climbing device;

— switch off the stair-climbing device.

NOTE These means may be combined into a single device.

When the on/off switch is turned off, the control device shall not cause any driven wheels or driven climbing mechanisms to move.

4.11.3 “Key off” power

When the stair-climbing device is turned off, internal circuits or leakage paths shall not drain the battery excessively.

With the on/off switch turned off, the stair-climbing device shall not draw from the battery set any current greater than the rated 20 h capacity of the smallest capacity battery specified for the stair-climbing device, corresponding to a four-month discharge period.

4.11.4 Emergency system

The stair-climbing device shall be equipped with an emergency system. The means to activate the emergency system shall be readily accessible to the user.

Activating the emergency system while the stair-climbing device is climbing shall bring the stair-climbing device to a complete stop at which it shall remain.

When the emergency system has been activated, turning-off power shall not override the emergency system.

The deactivation of the emergency system shall require a set of at least two sequential user actions specified by the manufacturer.

NOTE The on/off switch and the means to activate the emergency system need not be separate switches, although provisions should be included to prevent accidental activation of the emergency system. Emergency systems that can be deactivated by the user when the emergency situation is resolved would allow the stair-climbing device to be driven off the stairs.

4.11.5 Battery charge indicator

The stair-climbing device shall be equipped with a battery charge indicator capable of informing the user when the minimum reserve battery charge has been reached.

The stair-climbing device shall have the capacity to ascend a minimum of 20 steps plus descend a minimum of 20 steps after the battery charge indicator discloses that the minimum reserve battery charge has been reached.

AVA Documents
Document Sharing Hub

Full document details: BS ISO 7176-24:2004

4.11.6 Climbing mode exit restriction

For stair-climbing devices that have other operational modes in addition to climbing mode, it shall not be possible to exit or override the climbing mode or change to an operational mode other than climbing mode while on stairs unless it is declared by the manufacturer in writing that this is intended/permitted.

4.12 Ergonomic aspects

If the stair-climbing device is intended to be dismantled for ease of carrying:

— any component part that has a mass greater than 10 kg shall be provided with suitable handling devices (e.g. handles) or

— the user manual shall indicate the points where the component part can be lifted safely and/or give a method for handling during assembly.

5 Test apparatus

5.1 Straight test stairs, consisting of eight steps, each having a rise of 180 mm ± 5 mm. The overall pitch shall be 35° with a tolerance of $^{+1°}_{0}$ (see Figure 3). The steps shall be numbered from the lowest step upwards. A riser shall close the front face of each step. All step nosings shall fall within a region contained between two imaginary parallel planes 10 mm apart and inclined at the overall pitch of the stairs.

The step nosings shall be of a rigid material, smooth and rounded to a radius of 8 mm ± 1 mm. Each step shall be level and shall have a coefficient of friction conforming to ISO 7176-13.

The straight test stairs shall be capable of being connected to the upper landing. When the straight test stairs are placed on the horizontal test plane, this plane represents its lower landing.

The entire straight test stairs shall be capable of being tilted in downwards and upwards directions by means of the lifting gear (5.10).

Provision for a handrail, to be mounted if required, shall be incorporated on both sides of the test stairs.

NOTE For ease of testing it is recommended to use straight test stairs that are at last 500 mm wider than the stair-climbing device.

Documents
Document Sharing Hub
Full document details: BS ISO 7176-24:2004

Dimensions in millimetres

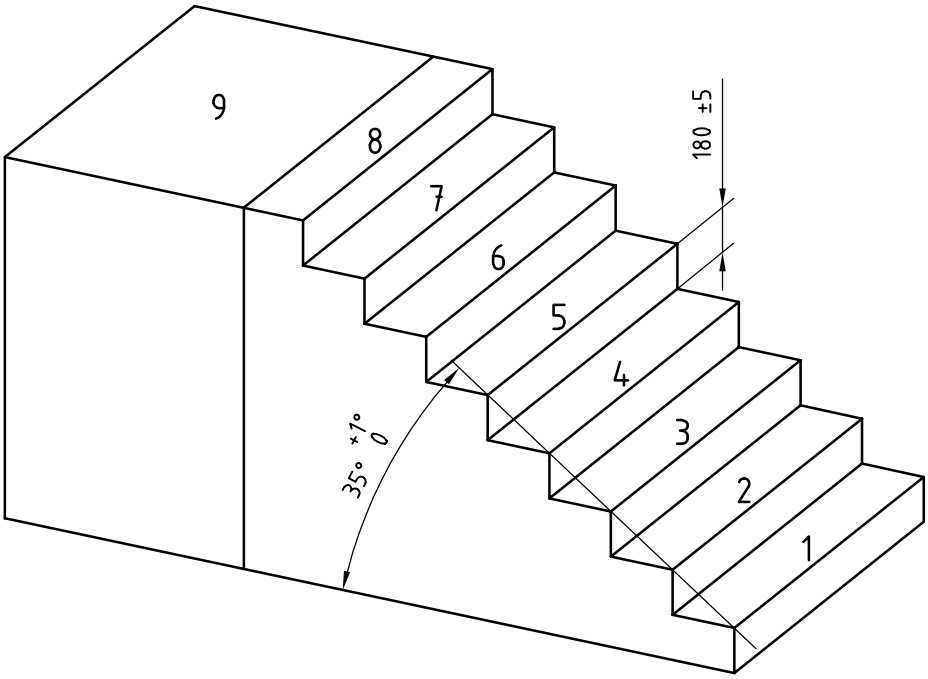

Key

1 to 8 step numbers

9 upper landing

Figure 3 — Straight test stairs with upper landing

5.2 Winding test stairs, consisting of eight steps, each having a rise of 180 mm ± 5 mm. The winding angle shall be 19° ± 0,5° per step. The step nosings shall be tangential to a virtual cylinder about the central axis of the stairs, which has a radius of 75 mm ± 20 mm. The going of each step shall be 257 mm ± 10 mm when measured perpendicular to the step nosing at a point that is 760 mm ± 10 mm from the central axis of the stairs when measured parallel to the step nosing. The inner radius of the stairs shall be 310 mm ± 10 mm. The steps shall be numbered from the lowest step upwards. A riser shall close the front face of each step (see Figure 4).

The step nosing shall be of a rigid material, smooth and rounded to a radius of 8 mm ± 1 mm. Each step shall be level and shall have a coefficient of friction that conforms to ISO 7176-13. The width of the stairs shall be at least 500 mm wider than the stair-climbing device under test including the test wheelchair (if used) and the user.

The winding test stairs shall be capable of being connected to the upper landing. When the winding test stairs are placed on the horizontal test plane, this plane represents its lower landing. Provision for a handrail, to be mounted if required, shall be incorporated on both sides of the test stairs.

AVA Documents
Document Sharing Hub

Full document details: BS ISO 7176-24:2004

Dimensions in millimetres

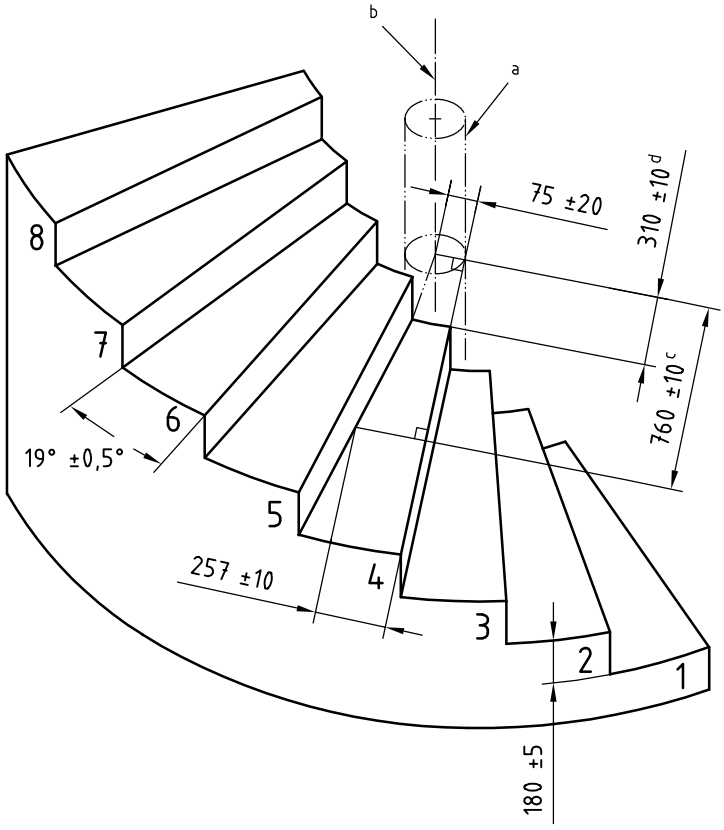

Key

1 to 8 step numbers

a Virtual cylinder that is located about the central axis of the stairs and has a radius of 75 mm ± 20 mm.

b Central axis of the stairs.

c Distance between central axis of the stairs and that point on the step nosing where the going is measured.

d Inner radius of stairs.

Figure 4 — Winding test stairs

5.3 Upper landing, consisting of a platform with a height equal to the height of the top steps in 5.1 and 5.2, with a tolerance of ± 5 mm (see Figure 3). The top of the platform shall have a coefficient of friction that conforms to ISO 7176-13. The platform shall be capable of being firmly connected to the straight test stairs or winding test stairs.

NOTE 1 The minimum recommended area of the upper landing is 2 000 mm × 2 000 mm.

NOTE 2 Some or all of the test apparatus in 5.1, 5.2 and 5.3 may be built in one piece.

5.4 Horizontal test plane, rigid and of sufficient size to accommodate the stair-climbing device, the straight test stairs, the winding test stairs and the upper landing during testing. The plane shall be flat such that the whole surface is contained between two imaginary horizontal parallel planes 5 mm apart. The surface of the plane shall have a coefficient of friction conforming to ISO 7176-13.

NOTE The two imaginary horizontal parallel planes are intended to provide a measure of control of the flatness of the horizontal test plane.

5.5 Adjustable barriers, capable of detecting the maximum excursion and/or operating area of the stair-climbing device on each step of 5.1 and 5.2 and on top of 5.3 and 5.4. The detecting surface of the barriers shall be flat, vertical and perpendicular to the step nosing when it is placed on a step.

AVA Documents
Document Sharing Hub

Full document details: BS ISO 7176-24:2004

NOTE Adjustable barriers may be physical planes, lights or any other appropriate means for detecting the maximum excursion of the stair-climbing device.

5.6 Test wheelchair, of the type or model recommended for transport in the stair-climbing device by the manufacturer of the stair-climbing device. If the manufacturer recommends several wheelchairs, the heaviest wheelchair shall be used. If no wheelchair is recommended, the surrogate wheelchair conforming to Annex C shall be used.

5.7 Test dummy, conforming to ISO 7176-11.

5.8 Energy consumption instrumentation, conforming to ISO 7176-4.

5.9 Means for measuring time, (e.g. stopwatch) with an accuracy of 0,1 s.

5.10 Lifting gear, capable of lifting the straight test stairs so that they can be tilted downwards and upwards (see Figure 5) and capable of lifting the combined mass of straight test stairs plus loaded stair-climbing device.

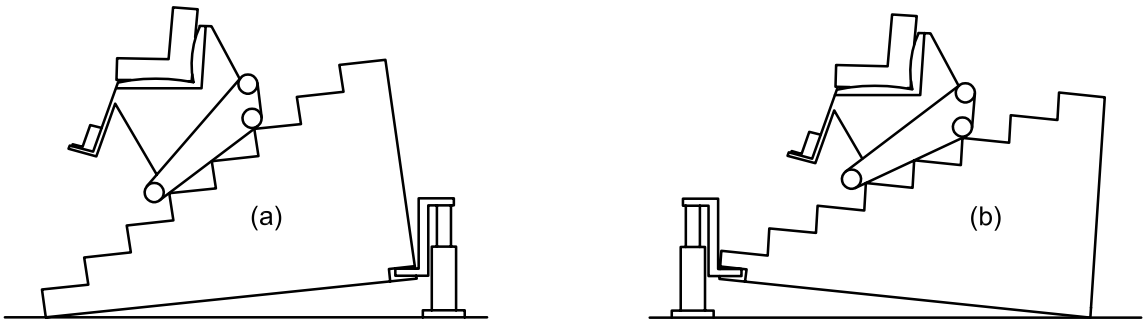

Figure 5 — Example of lifting gear with test stairs tilted downwards (a) or upwards (b)

5.11 Means for measuring linear dimension, (e.g. tape measure) capable of measuring up to 500 mm with an accuracy of ± 1 mm and 500 to 5 000 mm with an accuracy of ± 10 mm.

5.12 Handrail barrier, with a width of 400 mm ± 10 mm and a height of at least 1 000 mm to simulate the space for imaginary handrails and the two side distances to the wall at an intermediate landing of U-shaped stairs.

5.13 Acceleration rig, with a minimum pulling/pushing device length of 1 m, capable of pulling or pushing the stair-climbing device with constant force across the upper landing.

NOTE 1 An example of an acceleration rig is shown in Figure 6.

NOTE 2 The minimum length of the device is 1 m in order to reduce deviations from the straight line of action.

5.14 Tyre pressure gauge, capable of measuring tyre pressure up to 6 bar with an accuracy of ± 0,2 bar.

5.15 Dummy securement, conforming to ISO 7176-8:1998, 5.14.

5.16 Surrogate bag, (e.g. backpack) attached to the rear of the backrest to simulate the load of items typically carried by the user. The surrogate bag shall have a mass of 7 kg ± 0,25 kg, shall fit within a space measuring 35 cm × 20 cm × 42 cm and its centre of gravity shall be located at 30 cm ± 2 cm below the point of attachment.

5.17 Ammeter, with an accuracy of not less than 5 % of $I_{2\,900}$, given by the equation:

$$I_{2\,900} = \frac{C_{20}}{2\,900}$$

AVA Documents
Document Sharing Hub

Full document details: BS ISO 7176-24:2004

where

$I_{2\,900}$ is the numerical value of the current, expressed in amperes (A), drawn from the battery set corresponding to a four-month discharge period (2 900 h);

C_{20} is the rated 20 h capacity, expressed in ampere hours (Ah), of the smallest capacity battery specified for the stair-climbing device, by the manufacturer.

6 Preparation of the stair-climbing device

6.1 General

Before carrying out any of the test methods given in this part of ISO 7176, prepare the stair-climbing device as described in 6.2 to 6.9, unless otherwise stated in the individual test method.

6.2 Equipment and reference configuration

Equip and configure the stair-climbing device for climbing in accordance with the manufacturer's recommendations.

For adjustable parts where there are no manufacturer's recommendations, set any adjustable parts of the stair-climbing device, where applicable, in accordance with ISO 7176-22, replacing the term “wheelchair” by “stair-climbing device” and with the following changes and additions.

a) If the manufacturer of the stair-climbing device claims that it can be delivered with wheels of various diameters, select the wheel diameter recommended by the manufacturer. If there is no such recommendation select the medium diameter or, if there is no medium diameter, the next size greater than the medium diameter or, if there is no next size greater than the medium diameter, the size closest to the medium diameter.

b) Apply the adjustments for drive wheels as specified in ISO 7176-22 for any drive wheels, manoeuvring wheels and guide wheels.

c) If the seat height can be adjusted in a way other than as specified in ISO 7176-22, adjust the seat to a height recommended by the manufacturer. If there is no manufacturer's recommendation, adjust as close as possible to 530 mm for adults' stair-climbing devices and 420 mm for children's stair-climbing devices when on level ground.

d) Apply the adjustments for castors as specified in ISO 7176-22 for any castor wheels, pivot wheels and pivot drive wheels.

e) Where possible, adjust the castor stem angle to vertical with a tolerance of $^{+1°}_{0}$. If this is not possible, adjust to the nearest position to vertical (in the positive direction, where possible).

f) Adjust any anti-tippers as recommended by the manufacturer. If there is no manufacturer's recommendation, adjust so that it is as close as possible to the following position:

   1) the most backward point of the anti-tippers is at the same backward position as the most backward point of the stair-climbing device when on a horizontal plane;

   2) the loaded stair-climbing device can be tipped for 10° ± 2° before the anti-tippers contact the ground;

   3) if it is not possible to achieve both settings at one time, give priority to the setting of the 10° tipping angle.

Documents
Document Sharing Hub
Full document details: BS ISO 7176-24:2004

6.3 Battery charge

Charge batteries to at least 75 % of their rated nominal capacity.

6.4 Tyre inflation

If the stair-climbing device has pneumatic tyres, inflate them to the pressure recommended by the manufacturer of the stair-climbing device. If a pressure range is given, inflate the tyres to the highest pressure in the range. If there is no recommendation for inflation pressure from the stair-climbing device manufacturer, inflate the tyres to the maximum pressure recommended by the tyre manufacturer.

6.5 Speed setting

6.5.1 General

The speed setting is dependent on the type of test and shall be set as specified in 6.5.2 or 6.5.3.

6.5.2 Maximum recommended speed

If a test method is performed at maximum recommended speed (as determined in accordance with Annex D) set the stair-climbing device to the highest speed that is recommended by the manufacturer for normal use of the required operational mode.

6.5.3 Maximum test speed

If a test method is performed at maximum test speed:

— when speed is dependent on a motor, set the stair-climbing device to the highest possible speed of the required operational mode;

— when speed is governed by manual user input, let the stair-climbing device climb with a speed that is 20 % above the maximum recommended speed of the required operational mode [see 18.3 l) and 18.4 m)].

NOTE The 20 % speed rise is the upper limit of the maximum test speed but does not constitute an extra high test speed.

6.6 Loading of stair-climbing devices

6.6.1 Loading of stair-climbing chairs

If the stair-climbing chair has height-adjustable foot supports, adjust them to the maximum length for climbing as recommended by the manufacturer. If there are no manufacturer's recommendations, set the foot supports to the longest configuration but with a minimum clearance of 50 mm on level ground.

Load the stair-climbing chair with a test dummy, as described in 5.7. Its mass shall correspond to the maximum rated load specified by the manufacturer [see 18.2 a), 18.3 c) and 18.4 l)].

NOTE If it is specified for a given test that a test dummy or a human test person may be used, weights, such as sandbags, may be attached to a vest or garment worn by a test person to supplement the body mass of the test person and maintain the location of the centre of gravity of the test person as close as possible to that of a test dummy of equivalent mass.

WARNING — It is essential that appropriate precautions be taken to ensure the safety of test personnel and the test person.

Documents
Document Sharing Hub

Full document details: BS ISO 7176-24:2004

Where possible, position and, if necessary, fix the test dummy's feet on the footrests as specified in ISO 7176-7. If this position of the test dummy's feet is not possible or if there is an indication that it would represent an unrealistic seating position compared to a user of a stair-climbing chair, correct the position of the test dummy's feet to represent a more realistic seating position, then record the position and the reason it was found to be necessary.

If a given test requires the dummy to be secured to the seat or backrest, use the dummy securement as described in 5.15.

6.6.2 Loading of stair-climbing wheelchair carriers

If the manufacturer of the stair-climbing device specifies one or more wheelchair type(s) or model(s) to be transported, select the heaviest of these as the test wheelchair. Load the test wheelchair with a test dummy, as described in 6.7, the mass of which shall be the maximum rated load claimed by the manufacturer [see 18.2 a) and 18.3 c)] minus the mass of the test wheelchair.

NOTE 1 If the specified test wheelchair is not available, a surrogate wheelchair conforming to Annex C and of the same mass may be used.

If the manufacturer of the stair-climbing device does not specify a wheelchair type or model to be transported, calculate the mass of the test wheelchair from the maximum rated load claimed by the manufacturer [see 18.2 a), 18.3 c) and 18.4 l)] minus 100 kg and use a test wheelchair of that calculated mass together with a test dummy as described in 5.7, with a mass of 100 kg. If this is not possible (e.g. where the maximum rated load is less than 100 kg) use a test dummy of 75 kg mass or less, together with a test wheelchair with a mass calculated from the maximum rated load minus the mass of the test dummy. Record the manner of loading and the results in the test report.

If the test wheelchair has length-adjustable foot supports, adjust them to the maximum length but with a minimum clearance of 50 mm on level ground.

Where possible, position and, if necessary, fix the test dummy's feet on the footrests as specified in ISO 7176-7. If this position of the test dummy's feet is not possible or if there is an indication that it would represent an unrealistic seating position compared to a user of a stair-climbing wheelchair carrier, correct the position of the test dummy's feet to represent a more realistic seating position, then record the position and the reason it was found to be necessary.

If a given test requires the dummy to be secured to the seat or backrest, use the dummy securement as described in 5.15.

Dock the test wheelchair in the stair-climbing wheelchair carrier and configure the stair-climbing device for climbing in accordance with the manufacturer's instructions.

NOTE 2 Where convenient for the purposes of the test or where recommended by the manufacturer, the test wheelchair may be docked in the stair-climbing wheelchair carrier before the test dummy is loaded into the wheelchair.

NOTE 3 If it is specified for a given test that a test dummy or a human test person may be used, weights, such as sandbags, may be attached to a vest or garment worn by a test person to supplement the body mass of the test person and maintain the location of the centre of gravity of the test person as close as possible to that of a test dummy of equivalent mass.

WARNING — It is essential that appropriate precautions be taken to ensure the safety of test personnel and the test person.

Documents
Document Sharing Hub
Full document details: BS ISO 7176-24:2004

6.7 Exaggerated test set-up

Where an exaggerated test set-up is required, configure the stair-climbing device as follows, depending on the required direction.

For the exaggerated test set-up in a forward or downward direction, set the stair-climbing device to its least stable configuration in the forward direction in accordance with Annex E. Lean the torso of the dummy forward to achieve an angle as close as possible to 30° to the vertical. If there is a user restraint system that engages automatically without user input, lean the dummy forward to the maximum forward angle allowed by the restraint system.

For the exaggerated test set-up in a backwards or upwards direction, set the stair-climbing device to its least stable configuration in the backwards direction in accordance with Annex E. Unless the user manual contains a statement warning against the hazard of attaching items to the back of the stair-climbing device, hang the surrogate bag from the back of the seat (of stair-climbing device or transported wheelchair) at the most convenient location (e.g. handgrips or top of backrest).

For the exaggerated test set-up in the sideways direction, just set the stair-climbing device to its least stable configuration in the sideways direction in accordance with Annex E.

6.8 On/off switch

If a specific test requires operation of the stair-climbing device, turn the on/off switch on in accordance with the manufacturer's instructions.

6.9 Setting to operational mode

If a specific operational mode setting is required for a particular test, set the stair-climbing device in this operational mode in accordance with the manufacturer's instructions.

NOTE Changing to various operational modes may also call for re-configuration of the stair-climbing device such as reclining the seat or the test wheelchair for climbing or bringing it to an upright position for moving on level ground.

7 Test conditions

Test conditions shall be such that the test apparatus in 5.1 to 5.4 remains immobile during testing.

The ambient temperature shall be +20 °C ± 5 °C and the relative humidity shall be 30 % to 75 %.

8 Skew angle

8.1 Principle

The test methodology for determining the ability of the stair-climbing device to accommodate skew angle operations consists of performing a series of functional tests on straight test stairs with the stair-climbing device in climbing mode and at a skew angle then evaluating its performance.

8.2 Procedure

WARNING — This test can be hazardous. It is essential that appropriate precautions (e.g. restraints that catch the stair-climbing device in case of falling) be taken to protect test personnel and the test person.

This test is applicable to all stair-climbing devices.

AVA Documents
Document Sharing Hub

Full document details: BS ISO 7176-24:2004

Use the straight test stairs and the upper landing for conducting the test procedure.

Prepare the stair-climbing device as specified in Clause 6.

Load the stair-climbing device with the test wheelchair (where appropriate) and the appropriate test dummy or a human test person, as described in 6.6.

Perform all tests [a), b), c)] with the stair-climbing device set in its climbing mode.

If the angle between the climbing mechanism and the seat and/or backrest of a stair-climbing chair or the angle between the climbing mechanism and the transported wheelchair on a stair-climbing wheelchair carrier is not adopted automatically (e.g. upright on stairs and reclined on landings and level ground), perform the tests twice with the stair-climbing device set to both extreme angles.

Set the stair-climbing device to its exaggerated test set-up in the forward direction, as described in 6.7.

Perform all tests at maximum test speed (see 6.5.3) throughout the test sequence, even during transitions on to and off landings.

Unless the user manual contains a warning that identifies letting go of the handrails as a hazard, perform the test without the use of handrails.

a) Position the stair-climbing device on the lower landing at a skew angle of 9°, unless the manufacturer claims that the stair-climbing device exceeds the minimum requirement of 9°, in which case position the stair-climbing device on the lower landing at the skew angle claimed by the manufacturer $^{+1°}_{0}$.

b) Let the stair-climbing device climb up the stairs from the lower landing to the upper landing in accordance with the manufacturer's recommendations and score the performance in accordance with Table 1.

c) Repeat a) at the same skew angle, with the stair-climbing device positioned on the upper landing and let the stair-climbing device climb down the stairs to the lower landing in accordance with the manufacturer's recommendations.

d) Identify and record the lowest score of the test.

8.3 Expression of results

The results of the test shall be evaluated in accordance with Table 1.

Documents
Document Sharing Hub

Full document details: BS ISO 7176-24:2004

Table 1 — Scoring system for quantifying the results of the skew angle test and the dynamic stability test

Observed Response		Score
No tip, normal operation	All contact points[a] remain in contact with the test surface[b] AND stair climbing is consistent with manufacturer's instructions for use, force required is consistent with manufacturer's instructions for use.	5
Minor tip, normal operation	One contact point lifts and returns to the test surface causing no visible tip of the entire stair-climbing device AND stair climbing is consistent with manufacturer's instructions for use, force required is consistent with manufacturer's instructions for use.	4
Transient tip moderately greater force needed	All contact points of one end[c] of the stair-climbing device lift and return to the test surface. No other part of the stair-climbing device contacts the test surface OR Stair climbing is consistent with manufacturer's instructions for use, force required is moderately greater than for normal use, stair climbing is not interrupted.	3
Transient tip with other contact moderately greater force needed with other contact	All contact points of one end of the stair-climbing device lift and return to the test surface. A part of the stair-climbing device other than a contact point contacts the test surface. OR Stair climbing is consistent with manufacturer's instructions for use, force required is moderately greater than for normal use, a part of the stair-climbing device other than a contact point contacts the test surface, and stair climbing is not interrupted.	2
Partial tip significant force needed	All contact points of one end of the stair-climbing device lift off, and the stair-climbing device comes to rest on a part of the stair-climbing device other than a contact point, not more than 10° from its original orientation OR Force required is significantly greater than for normal use, stair climbing is interrupted.	1
Full tip not able to complete test	Stair-climbing device tips completely over, coming to rest at least 10° from its original orientation (unless caught by a restraining device or testing personnel for test purposes) OR Test was unable to be completed.	0

[a] A contact point is any point of the climbing mechanism which is intended to contact the test surface during testing.

[b] The test surface may either be the horizontal test plane, the straight test stairs or the upper landing respectively.

[c] The ends of the stair-climbing device may either be the front end, rear end, left side or right side.

8.4 Test report

In addition to the information specified in Clause 17, the test report shall include the following:

a) skew angle tested;

b) results of the test, evaluated in accordance with 8.3;

AVA Documents
Document Sharing Hub

Full document details: BS ISO 7176-24:2004

c) any difficulties encountered during testing;

d) any observation of relevance to the test;

e) any of the particular tests that could not be carried out including reasons why.

9 Braking effectiveness

9.1 Principle

The test methodology for determining the effectiveness of brakes consists of subjecting the stair-climbing device to various braking tests and measuring and comparing the braking distances as well as observing the performance of the stair-climbing device during the test.

NOTE This test is an extension and adaptation of ISO 7I76-3.

9.2 Test method

9.2.1 General

WARNING — These tests can be hazardous. It is essential that appropriate precautions (e.g. restraints that catch the stair-climbing device in case of falling) be taken to protect test personnel and the test person.

These tests are applicable to all stair-climbing devices.

Prepare the stair-climbing device as specified in Clause 6.

Load the stair-climbing device with the test wheelchair (where appropriate) and the appropriate test dummy or a human test person, as described in 6.6.

Perform all tests (where applicable) at maximum test speed (see 6.5.3).

NOTE Several test methods in 9.2 require the positioning of the stair-climbing device on steps, identified individually by a number. The stair-climbing device is deemed to be on a numbered step when half its length is across the nosing of the step ± 50 mm.

9.2.2 Test on level ground

Test the stair-climbing device in accordance with ISO 7176-3.

Perform the tests with the stair-climbing device set in its driving mode, if it has one, or its crawling mode or, if there is also no crawling mode, its climbing mode.

9.2.3 Test on stairs

9.2.3.1 General

Perform the tests using the straight test stairs, with the stair-climbing device set in its climbing mode.

9.2.3.2 Brake test downstairs

a) Position the stair-climbing device on step 7 and set it in its least stable configuration for the backwards direction in accordance with Annex E.

NOTE 1 When the stair-climbing device is in its least stable configuration for the backwards direction, it is in a more stable configuration for testing in the forward direction.

Documents
Document Sharing Hub
Full document details: BS ISO 7176-24:2004

b) Let the stair-climbing device climb down the stairs at maximum test speed.

c) Commence braking by the normal means in accordance with the manufacturer's recommendations when the most downward point of the climbing mechanism comes in contact with step 2.

d) Actuate the brake(s) to the maximum effect and maintain in operation until the stair-climbing device is brought to a complete stop. Measure the braking distance.

e) Repeat the test another two times.

f) Calculate and record the average downstairs braking distance together with any observations relevant to the test, such as tracking behaviour, loss of stability, sliding and brake failure and any other adverse situation.

NOTE 2 The downstairs braking distance is also needed for the tests of dynamic stability described in 11.2.3.6.

9.2.3.3 Brake test upstairs

a) Position the stair-climbing device on step 2 and set it in its least stable configuration for the forward direction in accordance with Annex E.

NOTE 1 When the stair-climbing device is in its least stable configuration for the forward direction, it is in a more stable configuration for testing in the backwards direction.

b) Let the stair-climbing device climb up the stairs at maximum test speed.

c) Commence braking by the normal means in accordance with the manufacturer's recommendations when the most upward point of the climbing mechanism comes in contact with step 7.

d) Actuate the brake(s) to the maximum effect and maintain in operation until the stair-climbing device is brought to a complete stop. Measure the braking distance.

e) Repeat the test another two times.

f) Calculate and record the average upstairs braking distance together with any observations relevant to the test, such as tracking behaviour, loss of stability, sliding and brake failure and any other adverse situation.

NOTE 2 The upstairs braking distance is also needed for the tests of dynamic stability described in 11.2.3.7.

9.2.3.4 Effect of repeated full application of brakes

Condition the brakes for the test by letting the stair-climbing device climb upstairs and downstairs on the straight test stairs as quickly as possible in the following manner.

a) From step 2 bring the stair-climbing device, with maximum acceleration, to full upward speed, then bring it to a full stop as quickly as possible on step 7.

b) From step 7 bring the stair-climbing device, with maximum acceleration, to full downward speed, then bring it to a full stop as quickly as possible on step 2.

c) Perform these procedures five times in succession and without pause.

Immediately following this conditioning, carry out the braking test described in 9.2.3.2.

Calculate and record whether there is any difference between this test and the results obtained from the brake test downstairs (9.2.3.2).

Documents
Document Sharing Hub

Full document details: BS ISO 7176-24:2004