BS ISO 7368:2016

BSI Standards Publication

Hydraulic fluid power — Two-port slip-in cartridge valves — Cavities

Documents
Document Sharing Hub

Full document details: BS ISO 7368:2016

National foreword

This British Standard is the UK implementation of ISO 7368:2016. It supersedes BS 7296-1:1990 which is withdrawn.

The UK participation in its preparation was entrusted to Technical Committee MCE/18/-/5, Control components.

A list of organizations represented on this committee can be obtained on request to its secretary.

This publication does not purport to include all the necessary provisions of a contract. Users are responsible for its correct application.

© The British Standards Institution 2016.
Published by BSI Standards Limited 2016

ISBN 978 0 580 87177 1

ICS 23.100.50

Compliance with a British Standard cannot confer immunity from legal obligations.

This British Standard was published under the authority of the Standards Policy and Strategy Committee on 30 September 2016.

Amendments/corrigenda issued since publication

Date	Text affected

Documents
Document Sharing Hub

Full document details: BS ISO 7368:2016

INTERNATIONAL STANDARD

ISO 7368

Second edition
2016-08-01

Hydraulic fluid power — Two-port slip-in cartridge valves — Cavities

Transmissions hydrauliques — Distributeurs à cartouche, à bride, à deux orifices — Logements

Reference number
ISO 7368:2016(E)

Documents
Document Sharing Hub
© ISO 2016

Full document details: BS ISO 7368:2016

COPYRIGHT PROTECTED DOCUMENT

© ISO 2016, Published in Switzerland

All rights reserved. Unless otherwise specified, no part of this publication may be reproduced or utilized otherwise in any form or by any means, electronic or mechanical, including photocopying, or posting on the internet or an intranet, without prior written permission. Permission can be requested from either ISO at the address below or ISO's member body in the country of the requester.

ISO copyright office
Ch. de Blandonnet 8 • CP 401
CH-1214 Vernier, Geneva, Switzerland
Tel. +41 22 749 01 11
Fax +41 22 749 09 47
copyright@iso.org
www.iso.org

© ISO 2016 – All rights reserved

Documents
Document Sharing Hub

Full document details: BS ISO 7368:2016

Contents

Page

Foreword iv
Introduction v
1 Scope 1
2 Normative references 1
3 Terms and definitions 1
4 Symbols 1
5 Tolerances 2
6 Dimensions 2
7 Identification statement (Reference of this International Standard) 3
Bibliography 36

© ISO 2016 – All rights reserved

Documents
Document Sharing Hub
Full document details: BS ISO 7368:2016

Foreword

ISO (the International Organization for Standardization) is a worldwide federation of national standards bodies (ISO member bodies). The work of preparing International Standards is normally carried out through ISO technical committees. Each member body interested in a subject for which a technical committee has been established has the right to be represented on that committee. International organizations, governmental and non-governmental, in liaison with ISO, also take part in the work. ISO collaborates closely with the International Electrotechnical Commission (IEC) on all matters of electrotechnical standardization.

The procedures used to develop this document and those intended for its further maintenance are described in the ISO/IEC Directives, Part 1. In particular the different approval criteria needed for the different types of ISO documents should be noted. This document was drafted in accordance with the editorial rules of the ISO/IEC Directives, Part 2 (see www.iso.org/directives).

Attention is drawn to the possibility that some of the elements of this document may be the subject of patent rights. ISO shall not be held responsible for identifying any or all such patent rights. Details of any patent rights identified during the development of the document will be in the Introduction and/or on the ISO list of patent declarations received (see www.iso.org/patents).

Any trade name used in this document is information given for the convenience of users and does not constitute an endorsement.

For an explanation on the meaning of ISO specific terms and expressions related to conformity assessment, as well as information about ISO's adherence to the World Trade Organization (WTO) principles in the Technical Barriers to Trade (TBT) see the following URL: www.iso.org/iso/foreword.html.

The committee responsible for this document is ISO/TC 131, *Fluid power systems*, Subcommittee SC 5, *Control products and components*.

This second edition cancels and replaces the first edition (ISO 7368:1989), which has been technically revised.

This edition includes the following significant changes with respect to the previous edition:

— New sizes 15 and 16 are introduced;

— Surface tolerances for sealing purposes are aligned with ISO 3601-2.

© ISO 2016 – All rights reserved
Documents
Document Sharing Hub
Full document details: BS ISO 7368:2016

Introduction

In hydraulic fluid power systems, power is transmitted and controlled through a liquid under pressure within an enclosed circuit. Typical components found in such systems are hydraulic valves. These devices control flow direction, pressure or flow rate of liquids in the enclosed circuit.

© ISO 2016 – All rights reserved

Documents
Document Sharing Hub
Full document details: BS ISO 7368:2016

Documents
Document Sharing Hub

Full document details: BS ISO 7368:2016

INTERNATIONAL STANDARD ISO 7368:2016(E)

Hydraulic fluid power — Two-port slip-in cartridge valves — Cavities

1 Scope

This document specifies only geometrical data relating to cavities in which two-port hydraulic slip-in cartridge valves are mounted in order to ensure interchangeability.

NOTE For example, this document does not specify rated pressures.

It applies to cavities for two-port hydraulic slip-in cartridge valves which are generally applicable to industrial equipment.

2 Normative references

The following documents are referred to in the text in such a way that some or all of their content constitutes requirements of this document. For dated references, only the edition cited applies. For undated references, the latest edition of the referenced document (including any amendments) applies.

ISO 1302, *Geometrical Product Specifications (GPS) — Indication of surface texture in technical product documentation*

ISO 2768-1, *General tolerances — Part 1: Tolerances for linear and angular dimensions without individual tolerance indications*

ISO 3601-2, *Fluid power systems — O-rings — Part 2: Housing dimensions for general applications*

ISO 4287, *Geometrical Product Specifications (GPS) — Surface texture: Profile method — Terms, definitions and surface texture parameters*

3 Terms and definitions

For the purposes of this document, the terms and definitions given in ISO 5598 apply.

ISO and IEC maintain terminological databases for use in standardization at the following addresses:

— IEC Electropedia: available at http://www.electropedia.org/

— ISO Online browsing platform: available at http://www.iso.org/obp

4 Symbols

a) A, B, X, Y, Z_1 and Z_2 identify ports the operational usage of which, in some cases, may be different from that given in the following examples:

   1) A: inlet, service, return corresponding to the placing in the hydraulic circuit;

   2) B: inlet, service, return corresponding to the placing in the hydraulic circuit;

   3) X: pilot, inlet;

   4) Y: pilot, return;

© ISO 2016 – All rights reserved

Documents
Document Sharing Hub
Full document details: BS ISO 7368:2016

5) Z_1: supplementary pilot, inlet;

6) Z_2: supplementary pilot, return;

b) F_1 … F_{12} identify threaded holes for fixing screws;

c) G, G_1 and G_2 identify the location of pin holes;

d) D identifies the fixing screw diameter;

e) r_{max} identifies the mounting surface edge radius;

f) R_1 indicates the maximum radius at the bottom of d_1.

The code system used in this document is defined in ISO 5783.

NOTE Size 15 and size 16 are not yet listed in ISO 5783.

5 Tolerances

The following requirements shall be applied to the sealing and chamfer surfaces, i.e. that area within the chain lines:

— surface roughness (see ISO 3601-2);

— surface roughness, Rz: as indicated on the figures according to ISO 1302 and ISO 4287;

— all non-specified surface finishes: Rz 63;

— surface roughness values are given in micrometres (µm);

— surface flatness: 0,01 mm over a distance of 100 mm (see ISO 3601-2).

The following tolerances shall be complied with along the x, y and z axes with respect to the origin:

— pin holes: ±0,2 mm;

— screw holes: ±0,2 mm;

— port holes: ±0,2 mm;

— general tolerances according to ISO 2768-1 for linear and angular dimensions without tolerances.

As for other dimensions, see Figure 1 to Figure 16.

6 Dimensions

6.1 Cavity dimensions for hydraulic slip-in cartridge valves with two main ports shall be selected from Figure 1 to Figure 16 and Table 1 to Table 16 as specified in 6.2 to 6.17.

6.2 Cavity dimensions for all types of valves, except main system pressure-relief valves, with main ports of 16 mm nominal diameter (size 06) (code 7368 - 06 - 1 - 1 - 16) are specified in Table 1 and shown in Figure 1.

6.3 Cavity dimensions for main system pressure-relief valves with main ports of 16 mm nominal diameter (size 06) (code 7368 - 06 - 2 - 1 - 16) are specified in Table 2 and shown in Figure 2.

6.4 Cavity dimensions for all types of valves, except main system pressure-relief valves, with main ports of 25 mm nominal diameter (size 08) (code 7368 - 08 - 3 - 1 - 16) are specified in Table 3 and shown in Figure 3.

© ISO 2016 – All rights reserved
Documents
Document Sharing Hub
Full document details: BS ISO 7368:2016

6.5 Cavity dimensions for main system pressure-relief valves with main ports of 25 mm nominal diameter (size 08) (code 7368 - 08 - 4 - 1 - 16) are specified in Table 4 and shown in Figure 4.

6.6 Cavity dimensions for all types of valves, except main system pressure-relief valves, with main ports of 32 mm nominal diameter (size 09) (code 7368 - 09 - 5 - 1 - 16) are specified in Table 5 and shown in Figure 5.

6.7 Cavity dimensions for main system pressure-relief valves with main ports of 32 mm nominal diameter (size 09) (code 7368 - 09 - 6 - 1 - 16) are specified in Table 6 and shown in Figure 6.

6.8 Cavity dimensions for all types of valves, except main system pressure-relief valves, with main ports of 40 mm nominal diameter (size 10) (code 7368 - 10 - 7 - 1 - 16) are specified in Table 7 and shown in Figure 7.

6.9 Cavity dimensions for main system pressure-relief valves with main ports of 40 mm nominal diameter (size 10) (code 7368 - 10 - 8 - 1 - 16) are specified in Table 8 and shown in Figure 8.

6.10 Cavity dimensions for all types of valves, except main system pressure-relief valves, with main ports of 50 mm nominal diameter (size 11) (code 7368 - 11 - 9 - 1 - 16) are specified in Table 9 and shown in Figure 9.

6.11 Cavity dimensions for main system pressure-relief valves with main ports of 50 mm nominal diameter (size 11) (code 7368 - 11 - 10 - 1 - 16) are specified in Table 10 and shown in Figure 10.

6.12 Cavity dimensions for all types of valves, except main system pressure-relief valves, with main ports of 63 mm nominal diameter (size 12) (code 7368 - 12 - 11 - 1 - 16) are specified in Table 11 and shown in Figure 11.

6.13 Cavity dimensions for main system pressure-relief valves with main ports of 63 mm nominal diameter (size 12) (code 7368 - 12 - 12 - 1 - 16) are specified in Table 12 and shown in Figure 12.

6.14 Cavity dimensions for all types of valves, except main system pressure-relief valves, with main ports of 80 mm nominal diameter (size 13) (code 7368 - 13 - 13 - 1 - 16) are specified in Table 13 and shown in Figure 13.

6.15 Cavity dimensions for all types of valves, except main system pressure-relief valves, with main ports of 100 mm nominal diameter (size 14) (code 7368 - 14 - 14 - 1 - 16) are specified in Table 14 and shown in Figure 14.

6.16 Cavity dimensions for all types of valves, except main system pressure-relief valves, with main ports of 125 mm nominal diameter (size 15) (code 7368 - 15 - 15 - 1 - 16) are specified in Table 15 and shown in Figure 15.

6.17 Cavity dimensions for all types of valves, except main system pressure-relief valves, with main ports of 160 mm nominal diameter (size 16) (code 7368 - 16 - 16 - 1 - 16) are specified in Table 16 and shown in Figure 16.

7 Identification statement (Reference of this International Standard)

Use the following statement in test reports, catalogues and sales literature when electing to comply with this International Standard:

"Cavity dimensions conform to ISO 7368, *Hydraulic fluid power — Two-port slip-in cartridge valves — Cavities.*"

Documents
Document Sharing Hub

© ISO 2016 – All rights reserved

Full document details: BS ISO 7368:2016

Dimensions and geometrical tolerances in millimetres

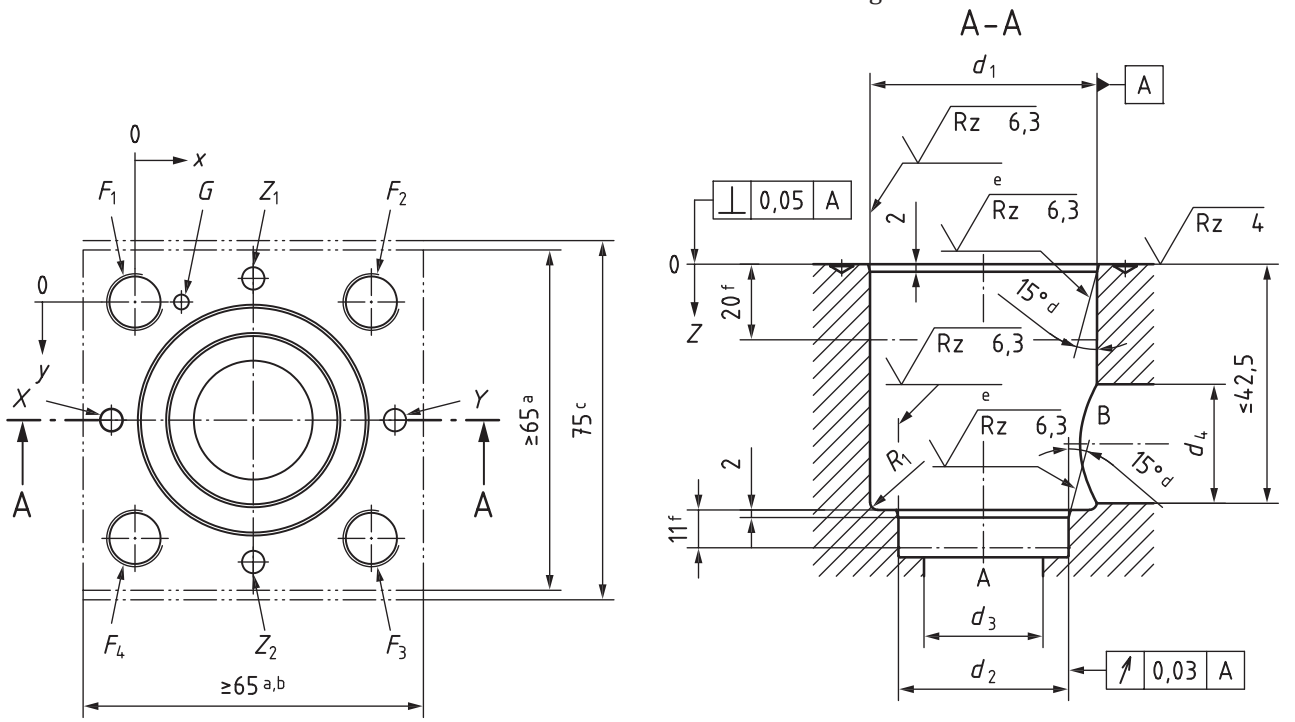

Key

a The dimension specifying the area within the chain lines is the minimum dimension for mounting the cartridge valve cover. The corners of the square may be rounded to a maximum radius, r_{max}, equal to the thread diameter of the fixing screws. Along each axis, the fixing holes are at equal distances to the valve cover mounting surface edges.

b Pilot valves and adjustment devices may exceed this dimension.

c This dimension gives the minimum space required for a two-port hydraulic slip-in cartridge valve and its cover with this cavity. The dimension is also the minimum distance from centreline to centreline of two identical cavities on a manifold. The valve manufacturer's attention is drawn to the fact that no part of the complete valve assembly shall exceed this dimension.

d No burrs permitted in this area; the edges shall be rounded.

e Visual examination.

f Minimum length over which the specified surface finish shall apply.

Figure 1 — Cavity for two-port hydraulic slip-in cartridge valves of all types, except main system pressure-relief valves, with main ports of 16 mm nominal diameter (size 06) and square flange cover (code: 7368 - 06 - 1 - 1 - 16)

© ISO 2016 – All rights reserved
Documents
Document Sharing Hub
Full document details: BS ISO 7368:2016

Table 1 — Cavity for two-port hydraulic slip-in cartridge valves of all types, except main system pressure-relief valves, with main ports of 16 mm nominal diameter (size 06) and square flange cover

Dimensions in millimetres

Axis	d_1[e]	d_2[e]	d_3[c]	d_4[b,c]	X[c]	Y[c]	Z_1[c]	Z_2[c]	F_1[a]	F_2[a]	F_3[a]	F_4[a]	G[d,e]	R_1
	ø 32 H7	**ø 25 H7**	**ø 16 max.**	**ø 16**	**ø 4 max.**	**ø 4 max.**	**ø 4 max.**	**ø 4 max.**	**M8**	**M8**	**M8**	**M8**	**ø 4 H13**	**max. R 2**
x	23	23	23	—	−2	48	23	23	0	46	46	0	12,5	—
y	23	23	23	—	23	23	−2	48	0	0	46	46	0	—
z	43 ± 0,2	56 + 0,1	—	—	—	—	—	—	—	—	—	—	8 min.	—

a The minimum thread depth is 1,8 times the screw diameter, D. The recommended full thread depth is 2•D + 6 mm to facilitate interchangeability of valves and to reduce the number of fixing screw lengths. However, sufficient distance from fixing hole to port B shall be respected. The recommended engagement of fixing screw thread for ferrous mounting is 1,25•D.

b Suggested diameter of port B, but may be of any size located within the space between the dimensions indicated as 20 mm and 42,5 mm; port B is not necessarily machined and may be provided by casting.

c The depth and angle of the pilot ports and the main ports are determined by the graphical layout of the hydraulic circuit and by the location of the valves in the manifold.

d Blind hole to accommodate the locating pin on the valve cover.

e The depth of d_1, d_2 and G are given in the tables as dimension z.

© ISO 2016 – All rights reserved

Documents
Document Sharing Hub
Full document details: BS ISO 7368:2016

Dimensions and geometrical tolerances in millimetres

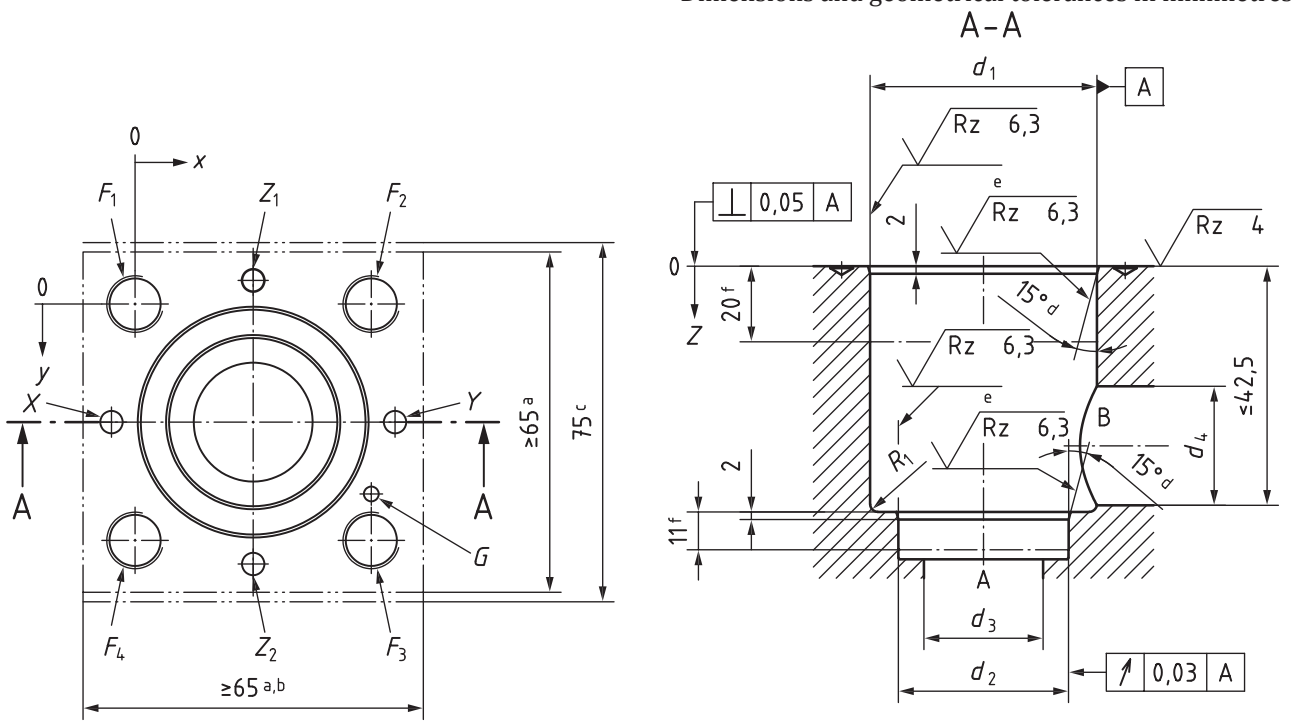

Key

a The dimension specifying the area within the chain lines is the minimum dimension for mounting the cartridge valve cover. The corners of the square may be rounded to a maximum radius, r_{max}, equal to the thread diameter of the fixing screws. Along each axis, the fixing holes are at equal distances to the valve cover mounting surface edges.

b Pilot valves and adjustment devices may exceed this dimension.

c This dimension gives the minimum space required for a two-port hydraulic slip-in cartridge valve and its cover with this cavity. The dimension is also the minimum distance from centreline to centreline of two identical cavities on a manifold. The valve manufacturer's attention is drawn to the fact that no part of the complete valve assembly shall exceed this dimension.

d No burrs permitted in this area; the edges shall be rounded.

e Visual examination.

f Minimum length over which the specified surface finish shall apply.

Figure 2 — Cavity for two-port hydraulic slip-in cartridge main system pressure-relief valves with main ports of 16 mm nominal diameter (size 06) and square flange cover (code: 7368 - 06 - 2 - 1 - 16)

© ISO 2016 – All rights reserved
Documents
Document Sharing Hub
Full document details: BS ISO 7368:2016

Table 2 — Cavity for two-port hydraulic slip-in cartridge main system pressure-relief valves with main ports of 16 mm nominal diameter (size 06) and square flange cover

Dimensions in millimetres

Axis	d_1[e]	d_2[e]	d_3[c]	d_4[b,c]	X[c]	Y[c]	Z_1[c]	Z_2[c]	F_1[a]	F_2[a]	F_3[a]	F_4[a]	G[d,e]	R_1
	ø 32 H7	**ø 25 H7**	**ø 16 max.**	**ø 16**	**ø 4 max.**	**ø 4 max.**	**ø 4 max.**	**ø 4 max.**	**M8**	**M8**	**M8**	**M8**	**ø 4 H13**	**max. R 2**
x	23	23	23	—	−2	48	23	23	0	46	46	0	46	—
y	23	23	23	—	23	23	−2	48	0	0	46	46	33,5	—
z	43 ± 0,2	56 + 0,1	—	—	—	—	—	—	—	—	—	—	8 min.	—

[a] The minimum thread depth is 1,8 times the screw diameter, D. The recommended full thread depth is 2•D + 6 mm to facilitate interchangeability of valves and to reduce the number of fixing screw lengths. However, sufficient distance from fixing hole to port B shall be respected. The recommended engagement of fixing screw thread for ferrous mounting is 1,25•D.

[b] Suggested diameter of port B, but may be of any size located within the space between the dimensions indicated as 20 mm and 42,5 mm; port B is not necessarily machined and may be provided by casting.

[c] The depth and angle of the pilot ports and the main ports are determined by the graphical layout of the hydraulic circuit and by the location of the valves in the manifold.

[d] Blind hole to accommodate the locating pin on the valve cover.

[e] The depth of d_1, d_2 and G are given in the tables as dimension z.

© ISO 2016 – All rights reserved

Documents
Document Sharing Hub
Full document details: BS ISO 7368:2016