BS ISO 7368:2025

BSI Standards Publication

Hydraulic fluid power — Two-port slip-in cartridge valves — Cavities

Documents
Document Sharing Hub

Full document details: BS ISO 7368:2025

National foreword

This British Standard is the UK implementation of ISO 7368:2025. It supersedes BS ISO 7368:2016, which is withdrawn.

The UK participation in its preparation was entrusted to Technical Committee MCE/18/-/5, Control components.

A list of organizations represented on this committee can be obtained on request to its committee manager.

Contractual and legal considerations

This publication has been prepared in good faith, however no representation, warranty, assurance or undertaking (express or implied) is or will be made, and no responsibility or liability is or will be accepted by BSI in relation to the adequacy, accuracy, completeness or reasonableness of this publication. All and any such responsibility and liability is expressly disclaimed to the full extent permitted by the law.

This publication is provided as is, and is to be used at the recipient's own risk.

The recipient is advised to consider seeking professional guidance with respect to its use of this publication.

This publication is not intended to constitute a contract. Users are responsible for its correct application.

© The British Standards Institution 2025
Published by BSI Standards Limited 2025

ISBN 978 0 539 24746 6

ICS 23.100.50

Compliance with a British Standard cannot confer immunity from legal obligations.

This British Standard was published under the authority of the Standards Policy and Strategy Committee on 31 July 2025.

Amendments/corrigenda issued since publication

Date	Text affected

Documents
Document Sharing Hub

Full document details: BS ISO 7368:2025

International Standard

ISO 7368

Third edition
2025-07

Hydraulic fluid power — Two-port slip-in cartridge valves — Cavities

Transmissions hydrauliques — Distributeurs à cartouche, à bride, à deux orifices — Logements

Reference number
ISO 7368:2025(en)

© ISO 2025

Documents
Document Sharing Hub

Full document details: BS ISO 7368:2025

COPYRIGHT PROTECTED DOCUMENT

© ISO 2025

All rights reserved. Unless otherwise specified, or required in the context of its implementation, no part of this publication may be reproduced or utilized otherwise in any form or by any means, electronic or mechanical, including photocopying, or posting on the internet or an intranet, without prior written permission. Permission can be requested from either ISO at the address below or ISO's member body in the country of the requester.

ISO copyright office
CP 401 • Ch. de Blandonnet 8
CH-1214 Vernier, Geneva
Phone: +41 22 749 01 11
Email: copyright@iso.org
Website: www.iso.org

Published in Switzerland

Documents
Document Sharing Hub
Full document details: BS ISO 7368:2025

Contents

Page

Foreword ..... **iv**
Introduction ..... **v**
1 Scope **1**
2 Normative references **1**
3 Terms and definitions **1**
4 Symbols **1**
5 Tolerances **2**
6 Dimensions **2**
7 Identification statement (reference of this document) **3**
Bibliography **36**

© ISO 2025 – All rights reserved

Documents
Document Sharing Hub
Full document details: BS ISO 7368:2025

Foreword

ISO (the International Organization for Standardization) is a worldwide federation of national standards bodies (ISO member bodies). The work of preparing International Standards is normally carried out through ISO technical committees. Each member body interested in a subject for which a technical committee has been established has the right to be represented on that committee. International organizations, governmental and non-governmental, in liaison with ISO, also take part in the work. ISO collaborates closely with the International Electrotechnical Commission (IEC) on all matters of electrotechnical standardization.

The procedures used to develop this document and those intended for its further maintenance are described in the ISO/IEC Directives, Part 1. In particular, the different approval criteria needed for the different types of ISO document should be noted. This document was drafted in accordance with the editorial rules of the ISO/IEC Directives, Part 2 (see www.iso.org/directives).

ISO draws attention to the possibility that the implementation of this document may involve the use of (a) patent(s). ISO takes no position concerning the evidence, validity or applicability of any claimed patent rights in respect thereof. As of the date of publication of this document, ISO had not received notice of (a) patent(s) which may be required to implement this document. However, implementers are cautioned that this may not represent the latest information, which may be obtained from the patent database available at www.iso.org/patents. ISO shall not be held responsible for identifying any or all such patent rights.

Any trade name used in this document is information given for the convenience of users and does not constitute an endorsement.

For an explanation of the voluntary nature of standards, the meaning of ISO specific terms and expressions related to conformity assessment, as well as information about ISO's adherence to the World Trade Organization (WTO) principles in the Technical Barriers to Trade (TBT), see www.iso.org/iso/foreword.html.

This document was prepared by Technical Committee ISO/TC 131, *Fluid power systems*, Subcommittee SC 5, *Control products and components*.

This third edition cancels and replaces the second edition (ISO 7368:2016), which has been technically revised.

The main changes are as follows:

— codification adapted to ISO 5783:2019, Clause 6 and all figure and table titles;

— introduction of new reference B on the manifold surface and perpendicularity to diameter d_1 (all figures);

— the runout tolerance of diameter d_2 additionally refers primarily to datum B. This is to avoid measuring errors due to the short measuring distance of diameter d_1 for determining the datum axis;

— R_2 introduced at the face side (inner corner) of outside diameter d_2 for all sizes (all figures);

— the tolerance of depth Z in Table 6 has been changed similar to Table 5 to ±0,2 mm;

— “NOTE Size 15 and size 16 are not yet listed in ISO 5783” in Clause 4 was deleted, because these sizes were included in ISO 5783-2019.

Any feedback or questions on this document should be directed to the user’s national standards body. A complete listing of these bodies can be found at www.iso.org/members.html.

© ISO 2025 – All rights reserved

Documents
Document Sharing Hub
Full document details: BS ISO 7368:2025

Introduction

In hydraulic fluid power systems, power is transmitted and controlled through a liquid under pressure within an enclosed circuit. Typical components found in such systems are hydraulic valves. These devices control flow direction, pressure or flow rate of liquids in the enclosed circuit.

© ISO 2025 – All rights reserved

Documents
Document Sharing Hub
Full document details: BS ISO 7368:2025

Documents
Document Sharing Hub

Hydraulic fluid power — Two-port slip-in cartridge valves — Cavities

1 Scope

This document specifies only geometrical data relating to cavities in which two-port hydraulic slip-in cartridge valves are mounted in order to ensure interchangeability.

NOTE For example, this document does not specify rated pressures.

It applies to cavities for two-port hydraulic slip-in cartridge valves which are generally applicable to industrial equipment.

2 Normative references

The following documents are referred to in the text in such a way that some or all of their content constitutes requirements of this document. For dated references, only the edition cited applies. For undated references, the latest edition of the referenced document (including any amendments) applies.

ISO 2768-1, *General tolerances — Part 1: Tolerances for linear and angular dimensions without individual tolerance indications*

ISO 3601-2, *Fluid power systems — O-rings — Part 2: Housing dimensions for general applications*

ISO 5598, *Fluid power systems and components — Vocabulary*

ISO 21920-1, *Geometrical product specifications (GPS) — Surface texture: Profile — Part 1: Indication of surface texture*

3 Terms and definitions

For the purposes of this document, the terms and definitions given in ISO 5598 apply.

ISO and IEC maintain terminology databases for use in standardization at the following addresses:

— ISO Online browsing platform: available at https://www.iso.org/obp

— IEC Electropedia: available at https://www.electropedia.org/

4 Symbols

a) A, B, X, Y, Z_1 and Z_2 identify ports the operational usage of which, in some cases, may be different from that given in the following examples:

   1) A: inlet, service, return corresponding to the placing in the hydraulic circuit;

   2) B: inlet, service, return corresponding to the placing in the hydraulic circuit;

   3) X: pilot, inlet;

   4) Y: pilot, return;

   5) Z_1: supplementary pilot, inlet;

© ISO 2025 – All rights reserved

Documents
Document Sharing Hub
Full document details: BS ISO 7368:2025

6) Z_2: supplementary pilot, return;

b) F_1 … F_{12} identify threaded holes for fixing screws;

c) G, G_1 and G_2 identify the location of pin holes;

d) D identifies the fixing screw diameter;

e) r_{max} identifies the mounting surface edge radius;

f) R_1 indicates the maximum radius at the bottom of d_1;

g) R_2 indicates the maximum radius at the bottom of d_2.

The code system used in this document is defined in ISO 5783.

5 Tolerances

The following requirements shall be applied to the sealing and chamfer surfaces, i.e. that area within the chain lines:

— surface roughness, *Rz*, as indicated on the figures in accordance with ISO 21920-1;

— all non-specified surface finishes: *Rz* 63;

— surface roughness values are given in micrometres (µm);

— surface flatness: 0,01 mm over a distance of 100 mm as specified in ISO 3601-2.

The following tolerances shall be complied with along the X, Y and Z axes with respect to the origin:

— pin holes: ±0,2 mm;

— screw holes: ±0,2 mm;

— port holes: ±0,2 mm;

— general tolerances in accordance with ISO 2768-1, ISO 2768-m for linear and angular dimensions without tolerances.

As for other dimensions, see Figure 1 to Figure 16.

6 Dimensions

6.1 Cavity dimensions for hydraulic slip-in cartridge valves with two main ports shall be selected from Figure 1 to Figure 16 and Table 1 to Table 16 as specified in 6.2 to 6.17.

6.2 Cavity dimensions for all types of valves, except main system pressure-relief valves, with main ports of 16 mm nominal diameter (size 06) (code: 7368 - 06 - 01 - 1 - 25) are specified in Table 1 and shown in Figure 1.

6.3 Cavity dimensions for main system pressure-relief valves with main ports of 16 mm nominal diameter (size 06) (code: 7368 - 06 - 02 - 1 - 25) are specified in Table 2 and shown in Figure 2.

6.4 Cavity dimensions for all types of valves, except main system pressure-relief valves, with main ports of 25 mm nominal diameter (size 08) (code: 7368 - 08 - 03 - 1 - 25) are specified in Table 3 and shown in Figure 3.

6.5 Cavity dimensions for main system pressure-relief valves with main ports of 25 mm nominal diameter (size 08) (code: 7368 - 08 - 04 - 1 - 25) are specified in Table 4 and shown in Figure 4.

© ISO 2025 – All rights reserved

Documents
Document Sharing Hub
Full document details: BS ISO 7368:2025

6.6 Cavity dimensions for all types of valves, except main system pressure-relief valves, with main ports of 32 mm nominal diameter (size 09) (code: 7368 - 09 - 05 - 1 - 25) are specified in Table 5 and shown in Figure 5.

6.7 Cavity dimensions for main system pressure-relief valves with main ports of 32 mm nominal diameter (size 09) (code: 7368 - 09 - 06 - 1 - 25) are specified in Table 6 and shown in Figure 6.

6.8 Cavity dimensions for all types of valves, except main system pressure-relief valves, with main ports of 40 mm nominal diameter (size 10) (code: 7368 - 10 - 07 - 1 - 25) are specified in Table 7 and shown in Figure 7.

6.9 Cavity dimensions for main system pressure-relief valves with main ports of 40 mm nominal diameter (size 10) (code: 7368 - 10 - 08 - 1 - 25) are specified in Table 8 and shown in Figure 8.

6.10 Cavity dimensions for all types of valves, except main system pressure-relief valves, with main ports of 50 mm nominal diameter (size 11) (code: 7368 - 11 - 09 - 1 - 25) are specified in Table 9 and shown in Figure 9.

6.11 Cavity dimensions for main system pressure-relief valves with main ports of 50 mm nominal diameter (size 11) (code: 7368 - 11 - 10 - 1 - 25) are specified in Table 10 and shown in Figure 10.

6.12 Cavity dimensions for all types of valves, except main system pressure-relief valves, with main ports of 63 mm nominal diameter (size 12) (code: 7368 - 12 - 11 - 1 - 25) are specified in Table 11 and shown in Figure 11.

6.13 Cavity dimensions for main system pressure-relief valves with main ports of 63 mm nominal diameter (size 12) (code: 7368 - 12 - 12 - 1 - 25) are specified in Table 12 and shown in Figure 12.

6.14 Cavity dimensions for all types of valves, except main system pressure-relief valves, with main ports of 80 mm nominal diameter (size 13) (code: 7368 - 13 - 13 - 1 - 25) are specified in Table 13 and shown in Figure 13.

6.15 Cavity dimensions for all types of valves, except main system pressure-relief valves, with main ports of 100 mm nominal diameter (size 14) (code: 7368 - 14 - 14 - 1 - 25) are specified in Table 14 and shown in Figure 14.

6.16 Cavity dimensions for all types of valves, except main system pressure-relief valves, with main ports of 125 mm nominal diameter (size 15) (code: 7368 - 15 - 15 - 1 - 25) are specified in Table 15 and shown in Figure 15.

6.17 Cavity dimensions for all types of valves, except main system pressure-relief valves, with main ports of 160 mm nominal diameter (size 16) (code: 7368 - 16 - 16 - 1 - 25) are specified in Table 16 and shown in Figure 16.

7 Identification statement (reference of this document)

Use the following statement in test reports, catalogues and sales literature when electing to conform with this document:

"Cavity dimensions conform to ISO 7368, *Hydraulic fluid power — Two-port slip-in cartridge valves — Cavities.*"

© ISO 2025 – All rights reserved

Documents
Document Sharing Hub
Full document details: BS ISO 7368:2025

Dimensions and geometrical tolerances in millimetres

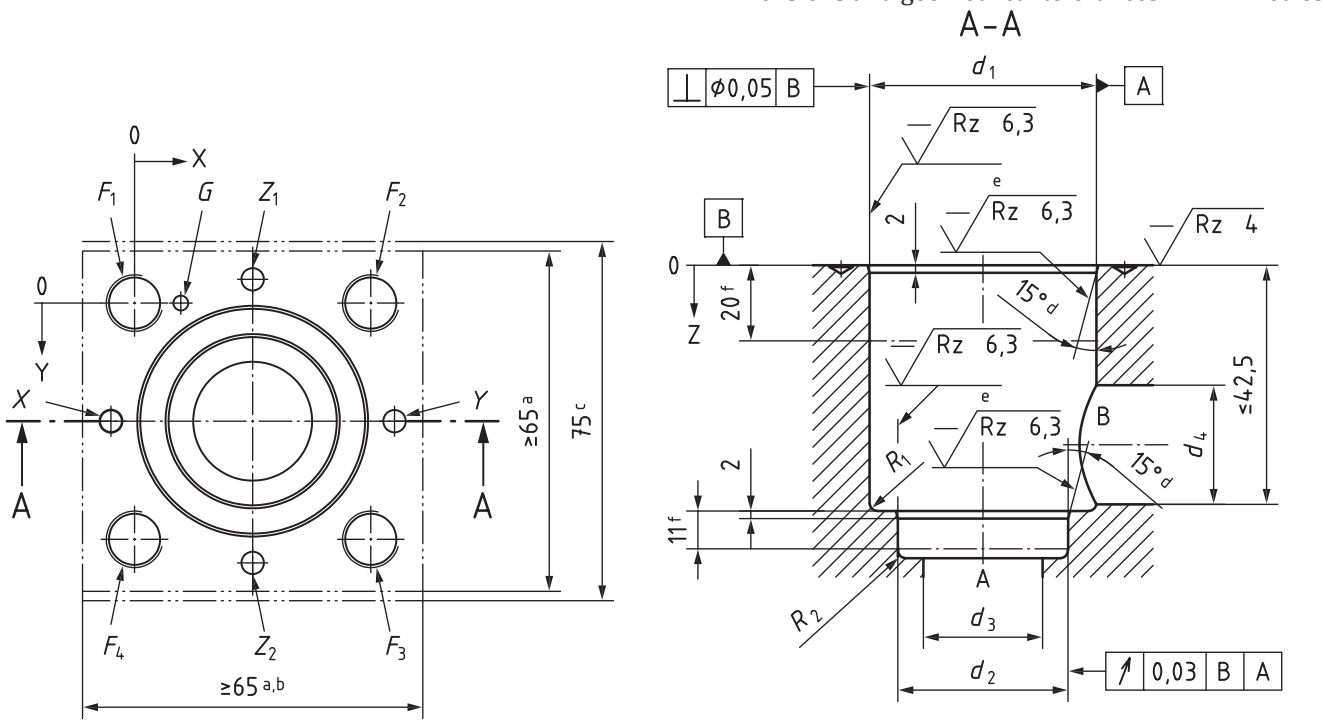

a The dimension specifying the area within the chain lines is the minimum dimension for mounting the cartridge valve cover. The corners of the square may be rounded to a maximum radius, r_{max}, equal to the thread diameter of the fixing screws. Along each axis, the fixing holes are at equal distances to the valve cover mounting surface edges.

b Pilot valves and adjustment devices may exceed this dimension.

c This dimension gives the minimum space required for a two-port hydraulic slip-in cartridge valve and its cover with this cavity. The dimension is also the minimum distance from centreline to centreline of two identical cavities on a manifold. The valve manufacturer's attention is drawn to the fact that no part of the complete valve assembly shall exceed this dimension.

d No burrs permitted in this area; the edges shall be rounded.

e Visual examination.

f Minimum length over which the specified surface finish shall apply.

Figure 1 — Cavity for two-port hydraulic slip-in cartridge valves of all types, except main system pressure-relief valves, with main ports of 16 mm nominal diameter (size 06) and square flange cover (code: 7368 - 06 - 01 - 1 - 25)

© ISO 2025 – All rights reserved

Documents
Document Sharing Hub
Full document details: BS ISO 7368:2025

Table 1 — Cavity for two-port hydraulic slip-in cartridge valves of all types, except main system pressure-relief valves, with main ports of 16 mm nominal diameter (size 06) and square flange cover

Dimensions in millimetres

Axis	d_1[e]	d_2[e]	d_3[c]	d_4[b,c]	X[c]	Y[c]	Z_1[c]	Z_2[c]	F_1[a]	F_2[a]	F_3[a]	F_4[a]	G[d,e]	R_1	R_2
	ø 32 H7	**ø 25 H7**	**ø 16 max.**	**ø 16**	**ø 4 max.**	**ø 4 max.**	**ø 4 max.**	**ø 4 max.**	**M8**	**M8**	**M8**	**M8**	**ø 4 H13**	**R2 max.**	**R1 max.**
X	23	23	23	—	−2	48	23	23	0	46	46	0	12,5	—	—
Y	23	23	23	—	23	23	−2	48	0	0	46	46	0	—	—
Z	43 ± 0,2	56 + 0,1	—	—	—	—	—	—	—	—	—	—	8 min.	—	—

[a] The minimum thread depth is 1,8 times the screw diameter, *D*. The recommended full thread depth is 2*D* + 6 mm to facilitate interchangeability of valves and to reduce the number of fixing screw lengths. However, sufficient distance from fixing hole to port B shall be respected. The recommended engagement of fixing screw thread for ferrous mounting is 1,25*D*.

[b] Suggested diameter of port B, but may be of any size located within the space between the dimensions indicated as 20 mm and 42,5 mm; port B is not necessarily machined and may be provided by casting.

[c] The depth and angle of the pilot ports and the main ports are determined by the graphical layout of the hydraulic circuit and by the location of the valves in the manifold.

[d] Blind hole to accommodate the locating pin on the valve cover.

[e] The depth of d_1, d_2 and G are given in the tables as dimension Z.

© ISO 2025 – All rights reserved

Documents
Document Sharing Hub
Full document details: BS ISO 7368:2025

Dimensions and geometrical tolerances in millimetres

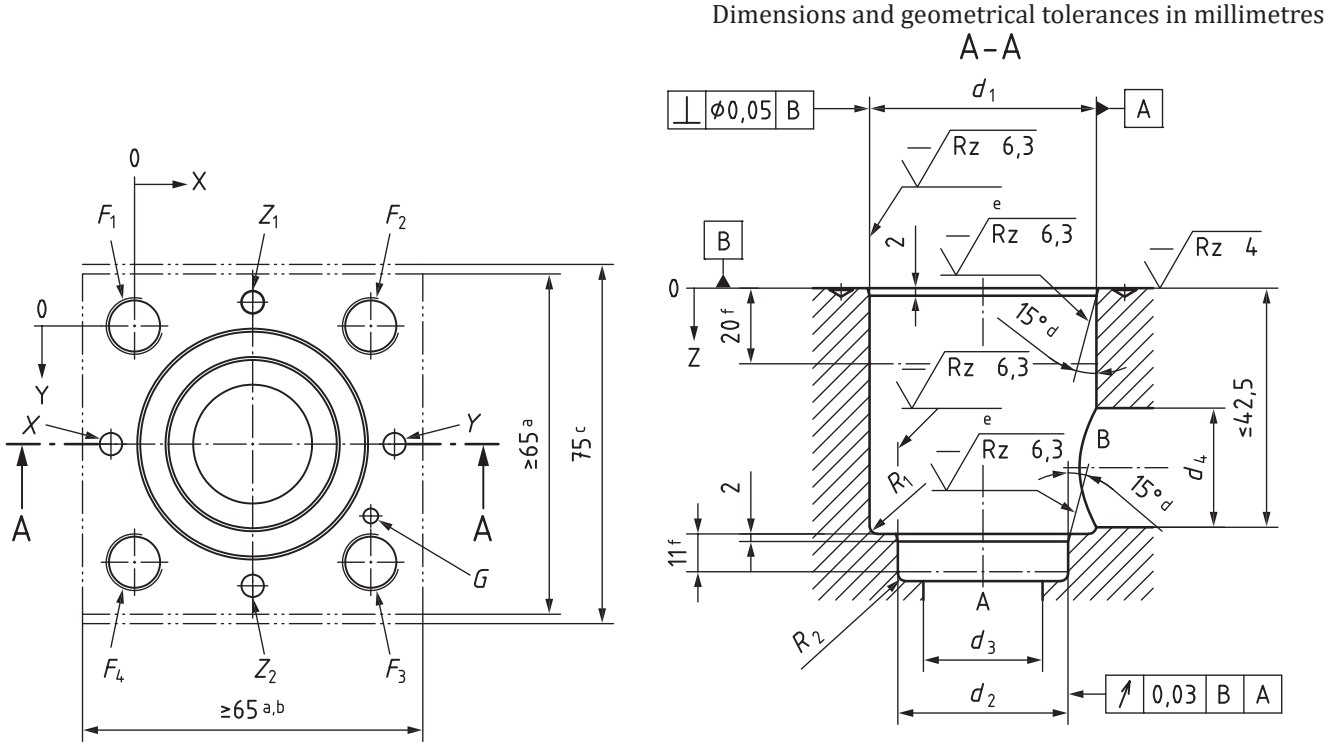

a The dimension specifying the area within the chain lines is the minimum dimension for mounting the cartridge valve cover. The corners of the square may be rounded to a maximum radius, r_{max}, equal to the thread diameter of the fixing screws. Along each axis, the fixing holes are at equal distances to the valve cover mounting surface edges.

b Pilot valves and adjustment devices may exceed this dimension.

c This dimension gives the minimum space required for a two-port hydraulic slip-in cartridge valve and its cover with this cavity. The dimension is also the minimum distance from centreline to centreline of two identical cavities on a manifold. The valve manufacturer's attention is drawn to the fact that no part of the complete valve assembly shall exceed this dimension.

d No burrs permitted in this area; the edges shall be rounded.

e Visual examination.

f Minimum length over which the specified surface finish shall apply.

Figure 2 — Cavity for two-port hydraulic slip-in cartridge main system pressure-relief valves with main ports of 16 mm nominal diameter (size 06) and square flange cover (code: 7368 - 06 - 02 - 1 - 25)

© ISO 2025 – All rights reserved

Documents
Document Sharing Hub
Full document details: BS ISO 7368:2025