BS ISO 8100-1:2019
Incorporating corrigendum August 2019

BSI Standards Publication

Lifts for the transport of persons and goods

Part 1: Safety rules for the construction and installation of passenger and goods passenger lifts

bsi.

AVA Documents
Document Sharing Hub

Full document details: BS ISO 8100-1:2019

National foreword

This British Standard is the UK implementation of ISO 8100-1:2019.

The UK participation in its preparation was entrusted to Technical Committee MHE/4, Lifts, hoists and escalators.

A list of organizations represented on this committee can be obtained on request to its secretary.

This publication does not purport to include all the necessary provisions of a contract. Users are responsible for its correct application.

© The British Standards Institution 2019
Published by BSI Standards Limited 2019

ISBN 978 0 539 06151 2

ICS 91.140.90

Compliance with a British Standard cannot confer immunity from legal obligations.

This British Standard was published under the authority of the Standards Policy and Strategy Committee on 31 March 2019.

Amendments/corrigenda issued since publication

Date	Text affected
31 August 2019	Implementation of ISO corrected text 19 July 2019: Title has changed

Documents
Document Sharing Hub

Full document details: BS ISO 8100-1:2019

INTERNATIONAL STANDARD

ISO 8100-1

First edition
2019-03

Corrected version
2019-07

Lifts for the transport of persons and goods —

Part 1: Safety rules for the construction and installation of passenger and goods passenger lifts

Elévateurs pour le transport de personnes et d'objets —

Partie 1: Règles de sécurité pour la construction et l'installation d'ascenseurs et d'ascenseurs de charge

Reference number
ISO 8100-1:2019(E)

Documents
Document Sharing Hub

© ISO 2019

Full document details: BS ISO 8100-1:2019

COPYRIGHT PROTECTED DOCUMENT

© ISO 2019

All rights reserved. Unless otherwise specified, or required in the context of its implementation, no part of this publication may be reproduced or utilized otherwise in any form or by any means, electronic or mechanical, including photocopying, or posting on the internet or an intranet, without prior written permission. Permission can be requested from either ISO at the address below or ISO's member body in the country of the requester.

ISO copyright office
CP 401 • Ch. de Blandonnet 8
CH-1214 Vernier, Geneva
Phone: +41 22 749 01 11
Fax: +41 22 749 09 47
Email: copyright@iso.org
Website: www.iso.org

Published in Switzerland

© ISO 2019 – All rights reserved

Documents
Document Sharing Hub

Full document details: BS ISO 8100-1:2019

Contents

Page

Foreword ... **vi**

Introduction ... **vii**

1 Scope ... **1**

2 Normative references ... **2**

3 Terms and definitions ... **3**

4 List of significant hazards ... **9**

5 Safety requirements and/or protective measures ... **11**

5.1 General ... 11
5.2 Well, machinery spaces and pulley rooms ... 11
5.2.1 General provisions ... 11
5.2.2 Access to well and to machinery spaces and pulley rooms ... 16
5.2.3 Access and emergency doors — Access trap doors — Inspection doors ... 17
5.2.4 Notices ... 18
5.2.5 Well ... 18
5.2.6 Machinery spaces and pulley rooms ... 30
5.3 Landing doors and car doors ... 37
5.3.1 General provisions ... 37
5.3.2 Height and width of entrances ... 38
5.3.3 Sills, guides, door suspension ... 38
5.3.4 Horizontal door clearances ... 38
5.3.5 Strength of landings and car doors ... 40
5.3.6 Protection in relation to door operation ... 44
5.3.7 Local landing lighting and “car here” signal lights ... 46
5.3.8 Locking and closed landing door check ... 47
5.3.9 Locking and emergency unlocking of landing and car doors ... 47
5.3.10 Requirements common to devices for proving the locked condition and the closed condition of the landing door ... 50
5.3.11 Sliding landing doors with multiple, mechanically linked panels ... 50
5.3.12 Closing of automatically operated landing doors ... 51
5.3.13 Electric safety device for proving the car doors closed ... 51
5.3.14 Sliding or folding car doors with multiple, mechanically linked panels ... 51
5.3.15 Opening the car door ... 51
5.4 Car, counterweight and balancing weight ... 52
5.4.1 Height of car ... 52
5.4.2 Available car area, rated load, number of passengers ... 52
5.4.3 Walls, floor and roof of the car ... 57
5.4.4 Car door, floor, wall, ceiling and decorative materials ... 58
5.4.5 Apron ... 58
5.4.6 Emergency trap doors and emergency doors ... 59
5.4.7 Car roof ... 60
5.4.8 Equipment on top of the car ... 63
5.4.9 Ventilation ... 63
5.4.10 Lighting ... 64
5.4.11 Counterweight and balancing weight ... 64
5.5 Suspension means, compensation means and related protection means ... 64
5.5.1 Suspension means ... 64
5.5.2 Sheave, pulley, drum and rope diameter ratios, rope/chain terminations ... 65
5.5.3 Rope traction ... 65
5.5.4 Winding up of ropes for positive drive lifts ... 66
5.5.5 Distribution of load between the ropes or the chains ... 66
5.5.6 Compensation means ... 67
5.5.7 Protection for sheaves, pulleys and sprockets ... 67

AVA Documents
Document Sharing Hub

© ISO 2019 – All rights reserved

Full document details: BS ISO 8100-1:2019

5.5.8 Traction sheaves, pulleys and sprockets in the well ... 69
5.6 Precautions against free fall, excessive speed, unintended car movement and creeping of the car ... 69
5.6.1 General provisions ... 69
5.6.2 Safety gear and its tripping means ... 70
5.6.3 Rupture valve ... 76
5.6.4 Restrictors ... 77
5.6.5 Pawl device ... 78
5.6.6 Ascending car overspeed protection means ... 79
5.6.7 Protection against unintended car movement ... 81
5.7 Guide rails ... 84
5.7.1 Guiding of the car, counterweight or balancing weight ... 84
5.7.2 Permissible stresses and deflections ... 84
5.7.3 Combination of loads and forces ... 87
5.7.4 Impact factors ... 87
5.8 Buffers ... 89
5.8.1 Car and counterweight buffers ... 89
5.8.2 Stroke of car and counterweight buffers ... 90
5.9 Lift machinery and associated equipment ... 91
5.9.1 General provision ... 91
5.9.2 Lift machine for traction lifts and positive drive lifts ... 92
5.9.3 Lift machine for hydraulic lifts ... 97
5.10 Electric installations and appliances ... 106
5.10.1 General provisions ... 106
5.10.2 Incoming supply conductor terminations ... 108
5.10.3 Contactors, contactor relays, components of safety circuits ... 108
5.10.4 Protection of electrical equipment ... 109
5.10.5 Main switches ... 110
5.10.6 Electric wiring ... 111
5.10.7 Lighting and socket outlets ... 112
5.10.8 Control of the supply for lighting and socket outlets ... 112
5.10.9 Protective earthing ... 113
5.10.10 Electrical identification ... 113
5.11 Protection against electric faults; failure analysis; electric safety devices ... 113
5.11.1 Protection against electric faults; failure analysis ... 113
5.11.2 Electric safety devices ... 114
5.12 Controls — Final limit switches — Priorities ... 119
5.12.1 Control of lift operations ... 119
5.12.2 Final limit switches ... 126
5.12.3 Emergency alarm device and intercom system ... 127
5.12.4 Priorities and signals ... 128

6 Verification of the safety requirements and/or protective measures ... 128
6.1 Technical compliance documentation ... 128
6.2 Verification of design ... 128
6.3 Examinations and tests before putting into service ... 132
6.3.1 Braking system (5.9.2.2) ... 132
6.3.2 Electric installation ... 133
6.3.3 Checking of the traction (5.5.3) ... 133
6.3.4 Car safety gear (5.6.2) ... 133
6.3.5 Counterweight or balancing weight safety gear (5.6.2) ... 134
6.3.6 Pawl device (5.6.5) ... 135
6.3.7 Buffers (5.8.1, 5.8.2) ... 135
6.3.8 Rupture valve (5.6.3) ... 135
6.3.9 Restrictor/one-way restrictor (5.6.4) ... 135
6.3.10 Pressure test ... 136
6.3.11 Ascending car overspeed protection means (5.6.6) ... 136
6.3.12 Stopping of the car at landings and levelling accuracy (5.12.1.1.4) ... 136
6.3.13 Protection against unintended car movement (5.6.7) ... 136

© ISO 2019 – All rights reserved
AVA Documents Document Sharing Hub
Full document details: BS ISO 8100-1:2019

6.3.14 Protection against falling/shearing (5.3.9.3.4) 137

7 Information for use 137

7.1 General 137

7.2 Instruction manual 137

7.2.1 General 137

7.2.2 Normal use 137

7.2.3 Maintenance 137

7.2.4 Examinations and tests 138

7.3 Logbook 138

8 Use of ISO/TS 8100-3 139

Annex A (normative) **List of the electric safety devices 140**

Annex B (informative) **Technical compliance documentation 142**

Annex C (informative) **Periodic examinations and tests, examinations and tests after an important modification or after an accident 143**

Annex D (informative) **Machinery spaces — Access 145**

Annex E (informative) **Building interfaces 146**

Annex F (normative) **Pit access ladder 149**

Annex G (informative) **Relationship between this document and ISO 8100-20 152**

Bibliography 153

© ISO 2019 – All rights reserved

Documents
Document Sharing Hub

Full document details: BS ISO 8100-1:2019

Foreword

ISO (the International Organization for Standardization) is a worldwide federation of national standards bodies (ISO member bodies). The work of preparing International Standards is normally carried out through ISO technical committees. Each member body interested in a subject for which a technical committee has been established has the right to be represented on that committee. International organizations, governmental and non-governmental, in liaison with ISO, also take part in the work. ISO collaborates closely with the International Electrotechnical Commission (IEC) on all matters of electrotechnical standardization.

The procedures used to develop this document and those intended for its further maintenance are described in the ISO/IEC Directives, Part 1. In particular, the different approval criteria needed for the different types of ISO documents should be noted. This document was drafted in accordance with the editorial rules of the ISO/IEC Directives, Part 2 (see www.iso.org/directives).

Attention is drawn to the possibility that some of the elements of this document may be the subject of patent rights. ISO shall not be held responsible for identifying any or all such patent rights. Details of any patent rights identified during the development of the document will be in the Introduction and/or on the ISO list of patent declarations received (see www.iso.org/patents).

Any trade name used in this document is information given for the convenience of users and does not constitute an endorsement.

For an explanation of the voluntary nature of standards, the meaning of ISO specific terms and expressions related to conformity assessment, as well as information about ISO's adherence to the World Trade Organization (WTO) principles in the Technical Barriers to Trade (TBT) see www.iso.org/iso/foreword.html.

This document was prepared by Technical Committee ISO/TC 178, *Lifts, escalators, passenger conveyors*.

Any feedback or questions on this document should be directed to the user's national standards body. A complete listing of these bodies can be found at www.iso.org/members.html.

A list of all parts in the ISO 8100 series can be found on the ISO website.

In this corrected version of ISO 8100:2019, the title has been changed.

© ISO 2019 – All rights reserved
Documents
Document Sharing Hub
Full document details: BS ISO 8100-1:2019

Introduction

0.1 General

The content of this document was already published in EN 81-20:2014. This document contains only editorial changes and update of references.

This document is a type C standard as stated in ISO 12100.

The machinery concerned and the extent to which hazards, hazardous situations and hazardous events are covered are indicated in the scope of this document.

When provisions of this type C standard are different from those which are stated in type A or B standards, the provisions of this type C standard take precedence over the provisions of the other standards, for machines that have been designed and built according to the provisions of this type C standard.

0.2 General remarks

0.2.1 The object of this document is to define safety rules related to passenger and goods passenger lifts with a view to safeguarding persons and objects against the risk of accidents associated with the normal use, maintenance and emergency operation of lifts.

0.2.2 A study has been made of the various possible hazards with lifts, see Clause 4.

0.2.2.1 Persons to be safeguarded:

a) users, including passengers and competent and authorized persons, e.g. maintenance and inspection personnel (see EN 13015);

b) persons in the surrounding area of the well, or any machine room and pulley room, who can be effected by the lift.

0.2.2.2 Property to be safeguarded:

a) loads in car;

b) components of the lift installation;

c) building in which the lift is installed;

d) immediate surrounding area of the lift installation.

NOTE EN 81-71 gives additional requirements covering lifts resistant to acts of vandalism and EN 81-77 gives additional requirements covering lifts in seismic conditions.

0.2.3 When the weight, size and/or shape of components prevent them from being moved by hand, they are:

a) fitted with attachments for lifting gear; or

b) designed so that they can be fitted with such attachments (e.g. by means of threaded holes); or

c) shaped in such a way that standard lifting gear can easily be attached.

0.3 Principles

0.3.1 General

In drawing up this document, the following principles have been used:

0.3.2 This document does not repeat all the general technical rules applicable to every electrical, mechanical, or building construction including the protection of building elements against fire.

AVA Documents
Document Sharing Hub

© ISO 2019 – All rights reserved

Full document details: BS ISO 8100-1:2019

However, it has been necessary to establish certain requirements for good construction, either because they are peculiar to lift manufacture or because, in the case of lift utilization, the requirements can be more stringent than elsewhere.

0.3.3 This document states minimum rules for the installation of lifts into buildings/constructions. There can be regulations for the construction of buildings in some countries which cannot be ignored.

Typical clauses affected by this are those defining minimum values for the height of the machine and pulley rooms and for the dimensions of their access doors.

0.3.4 As far as possible, this document sets out only the requirements that materials and equipment should meet in the interests of safe operation of lifts.

0.3.5 Risk analysis, terminology and technical solutions have been considered, taking into account the methods of ISO 12100, ISO 14798 and the IEC 61508 series of standards.

0.3.6 In order for this document to be a widely applicable standard, the average weight of a person has been determined to be 75 kg.

This document defines the maximum car area related to a specified design load in the car (rated load) and the minimum car area to transport a corresponding number of persons, based on 75 kg per person, in order to detect and discourage overloading.

0.4 Assumptions

0.4.1 General

In drawing up this document, the following assumptions have been made:

0.4.2 Negotiations have been made between the customer and the supplier, and an agreement was reached about:

a) the intended use of the lift;

b) the type and mass of the handling devices intended to be used to load and unload the car, in the case of goods passenger lifts;

c) environmental conditions such as temperature, humidity, exposure to sun or wind, snow, corrosive atmosphere;

d) civil engineering problems (for example, building regulations);

e) other aspects related to the place of installation;

f) the dissipation of heat from the components/equipment of the lift which would require ventilation of the well and/or the machinery space/location of equipment;

g) information about the aspects relating to noise and vibrations emitted by the equipment.

0.4.3 Relevant risks have been considered for each component that can be incorporated in a complete lift installation and rules have been drawn up accordingly.

Components are:

a) designed in accordance with usual engineering practice (see ISO/TS 8100-21) and calculation codes, taking into account all failure modes;

b) of sound mechanical and electrical construction;

c) made of materials with adequate strength and of suitable quality;

d) free of defects;

e) free from harmful materials, e.g. asbestos.

© ISO 2019 – All rights reserved
Documents
Document Sharing Hub
Full document details: BS ISO 8100-1:2019

0.4.4 Components are kept in good repair and working order, so that the required dimensions remain fulfilled despite wear. All lift components are considered as requiring inspection to ensure safe continued operation during use.

The operational clearances specified in the standard should be maintained not only during the examination and tests before the lift is put into service, but also throughout the life of the lift.

NOTE Components not requiring maintenance (e.g. maintenance free, sealed for life) are still required to be available for inspection.

0.4.5 Components are selected and installed so that foreseeable environmental influences and special working conditions do not affect the safe operation of the lift.

0.4.6 By design of the load bearing elements, safe normal operation of the lift is assured for loads ranging from 0 % to 100 % of the rated load, plus any designed overload capacity (see 5.12.1.2).

0.4.7 The requirements in this document are such that the possibility of a failure of an electric safety device (see 5.11.2) or a type tested safety component complying with all the requirements of this document and ISO 8100-2, does not need to be taken into consideration.

0.4.8 Users need to be safeguarded against their own negligence and unwitting carelessness when using the lift in the intended way.

0.4.9 A user can, in certain cases, make one imprudent act. The possibility of two simultaneous acts of imprudence and/or the abuse of instructions for use is not considered.

0.4.10 If in the course of maintenance work, a safety device normally not accessible to the users is deliberately neutralized, safe operation of the lift is no longer assured, but compensatory measures are taken to ensure users' safety, in conformity with maintenance instructions.

It is assumed that maintenance personnel are instructed and work according to the instructions.

0.4.11 Horizontal forces and/or energies to consider are indicated in the applicable clauses of this document. Typically, where not otherwise specified in this document, the energy exerted by a person results in an equivalent static force of:

a) 300 N;

b) 1 000 N where impact can occur.

0.4.12 With the exception of the items listed below, which have been given special consideration, a mechanical device built according to good practice and the requirements of this document (including uncontrolled slipping of the ropes on the traction sheave) does not deteriorate to a point of creating hazard without the possibility of detection, provided that all of the instructions given by the manufacturer have been duly applied:

a) breakage of the suspension;

b) breakage and slackening of all linkage by auxiliary ropes, chains and belts;

c) failure of one of the mechanical components of the electromechanical brake which take part in the application of the braking action on the drum or disk;

d) failure of a component associated with the main drive elements and the traction sheave;

e) rupture in the hydraulic system (jack excluded);

f) small leakage in the hydraulic system (jack included, see 6.3.10).

0.4.13 The possibility of the safety gear not engaging should the car free fall from a stationary position, at the lowest landing before the car strikes the buffer(s), is considered acceptable.

© ISO 2019 – All rights reserved

Documents
Document Sharing Hub
Full document details: BS ISO 8100-1:2019

0.4.14 When the speed of the car is linked to the electrical frequency of the mains, the speed is assumed not to exceed 115 % of the rated speed or a corresponding lesser speed where specified in this document for inspection control, levelling, etc.

0.4.15 Means of access are provided for the hoisting of heavy equipment [see 0.4.2 e)].

0.4.16 To ensure the correct functioning of the equipment in the well and machinery space(s), i.e. taking into account the heat dissipated by the equipment, the ambient temperature in the well and the machinery space(s) is assumed to be maintained between +5 °C and +40 °C.

NOTE See IEC 60364-5-51, Code AA5.

0.4.17 The well is suitably ventilated, according to national building regulation, taking into consideration the heat output as specified by the manufacturer, the environmental conditions of the lift and the limits given in 0.4.16, e.g. ambient temperature, humidity, direct sunlight, air quality and air tightness of buildings due to energy saving requirements.

NOTE See 0.4.2 and E.3 for further guidance.

0.4.18 Access ways to the working areas are adequately lit (see 0.4.2).

0.4.19 Minimum passageways, corridors, fire escapes, etc. are not obstructed by the open door/trap of the lift and/or any protection means for working areas outside of the well, where fitted according to the maintenance instructions (see 0.4.2).

0.4.20 Where more than one person is working at the same time on a lift, an adequate means of communication between these persons is ensured.

0.4.21 The fixing system of guards, used specifically to provide protection against mechanical, electrical or any other hazards by means of a physical barrier, which need to be removed during regular maintenance and inspection, remains attached to the guard or to the equipment when the guard is removed.

0.4.22 The fluids used for the operation of hydraulic lifts are according to ISO 6743-4.

© ISO 2019 – All rights reserved
Documents
Document Sharing Hub
Full document details: BS ISO 8100-1:2019

Lifts for the transport of persons and goods —

Part 1: Safety rules for the construction and installation of passenger and goods passenger lifts

1 Scope

1.1 This document specifies the safety rules for permanently installed new passenger or goods passenger lifts, with traction, positive or hydraulic drive, serving defined landing levels, having a car designed for the transportation of persons or persons and goods, suspended by ropes, chains or jacks and moving between guide rails inclined not more than 15° to the vertical.

1.2 In addition to the requirements of this document, supplementary requirements need to be considered in special cases (use of lifts by persons with disabilities, in case of fire, potentially explosive atmosphere, extreme climate conditions, seismic conditions, transporting dangerous goods, etc.).

1.3 This document does not cover:

a) lifts with:

   1) drive systems other than those stated in 1.1;

   2) rated speed less than or equal to 0,15 m/s;

b) hydraulic lifts:

   1) with a rated speed exceeding 1 m/s;

   2) where the setting of the pressure relief valve (5.9.3.5.3) exceeds 50 MPa;

c) new passenger or goods passenger lifts in existing buildings[1)] where, in some circumstances due to limitations enforced by building constraints, some requirements of this document cannot be met and local requirements, e.g., EN 81-21 need to be considered;

d) lifting appliances, such as paternosters, mine lifts, theatrical lifts, appliances with automatic caging, skips, lifts and hoists for building and public works sites, ships' hoists, platforms for exploration or drilling at sea, construction and maintenance appliances or lifts in wind turbines;

e) important modifications (see Annex C) to a lift installed before this document is brought into application;

f) safety during operations of transport, erection, repairs, and dismantling of lifts.

However, this document can usefully be taken as a basis.

Noise and vibrations are not dealt with in this document as they are not found at levels which could be considered harmful with regard to the safe use and maintenance of the lift (see also 0.4.2).

1.4 This document is not applicable to passenger and goods passenger lifts, which are installed before the date of its publication.

1) An existing building is a building which is used or was already used before the order for the lift was placed. A building whose internal structure is completely renewed is considered a new building.

© ISO 2019 – All rights reserved

Documents Document Sharing Hub
Full document details: BS ISO 8100-1:2019

2 Normative references

The following documents are referred to in the text in such a way that some or all of their content constitutes requirements of this document. For dated references, only the edition cited applies. For undated references, the latest edition of the referenced document (including any amendments) applies.

ISO 1219-1, *Fluid power systems and components — Graphical symbols and circuit diagrams — Part 1: Graphical symbols for conventional use and data-processing applications*

ISO 3008-2, *Fire-resistance tests — Part 2: Lift landing door assemblies*

ISO 4344, *Steel wire ropes for lifts — Minimum requirements*

ISO 8100-2:2019, *Safety rules for the construction and installation of lifts — Examinations and tests — Part 2: Design rules, calculations, examinations and tests of lift components*

ISO/TS 8100-3, *Requirements from Other Standards (ASME A17.1/CSA B44 and JIS A 4307-1/ JIS A 4307-2) not included in ISO 8100-1 or ISO 8100-2*

ISO 12100, *Safety of machinery — General principles for design — Risk assessment and risk reduction*

ISO 13857:2008, *Safety of machinery — Safety distances to prevent hazard zones being reached by upper and lower limbs*

ISO 22200, *Electromagnetic compatibility — Product family standard for lifts, escalators and moving walks — Immunity*

ISO 22199, *Electromagnetic compatibility — Product family standard for lifts, escalators and moving walks — Emission*

ISO 29584:2015, *Glass in building — Pendulum impact testing and classification of safety glass*

IEC 60204-1:2006, *Safety of machinery — Electrical equipment of machines — Part 1: General requirements*

IEC 60227-6, *Polyvinyl chloride insulated cables of rated voltages up to and including 450/750 V — Part 6: Lift cables and cables for flexible connections*

IEC 60245-5, *Rubber insulated cables — Rated voltages up to and including 450/750 V — Part 5: Lift cables*

IEC 60364-4-41:2005, *Low voltage electrical installations — Part 4-41: Protection for safety — Protection against electric shock*

IEC 60364-4-42:2010, *Low voltage electrical installations — Part 4-42: Protection for safety — Protection against thermal effects*

IEC 60364-6:2006, *Low voltage electrical installations — Part 6: Verification*

IEC 60417, *Database — Graphical symbols for use on equipment*

IEC 60529, *Degrees of protection provided by enclosures (IP Code)*

IEC 60617, *Graphical symbols for diagrams*

IEC 60664-1, *Insulation coordination for equipment within low-voltage systems — Part 1: Principles, requirements and tests*

IEC 60947-4-1:2009, *Low-voltage switchgear and controlgear — Part 4: Contactors and motor — starters - Section 1: Electromechanical contactors and motor-starters*

IEC 60947-5-1:2003, *Low-voltage switchgear and controlgear — Part 5-1: Control circuit devices and switching elements — Electromechanical control circuit devices*

IEC 60947-5-5, *Low-voltage switchgear and controlgear — Part 5-5: Control circuit devices and switching elements — Electrical emergency stop device with mechanical latching function*

© ISO 2019 – All rights reserved
Documents
Document Sharing Hub
Full document details: BS ISO 8100-1:2019

IEC 61310-3, *Safety of machinery - Indication, marking and actuation — Requirements for the location and operation of actuators*

IEC 61800-5-2:2007, *Adjustable speed electrical power drive systems — Part 2: Safety requirements. Functional)*

IEC 61810-1, *Electromechanical elementary relays — Part 1: General requirements*

EN 12385-5, *Steel wire ropes — Safety — Stranded ropes for lifts*

EN 81-28, *Safety rules for the construction and installation of lifts — Lifts for the transport of persons and goods — Part 28: Remote alarm on passenger and goods passenger lifts*

EN 81-58, *Safety rules for the construction and installation of lifts — Examinations and tests - Part 58: Landing door fire resistance test*

EN 131-2:2010, *Ladders — Requirements, testing, marking*

EN 1993-1-1, *Eurocode 3 — Design of steel structures — Part 1-1: General rules and rules for buildings*

EN 10305 (all parts), *Steel tubes for precision applications — Technical delivery conditions*

EN 13015, *Maintenance for lifts and escalators — Rules for maintenance instructions*

EN 13501-1, *Fire classification of construction products and building elements — Part 1: Classification using data from reaction to fire tests*

EN 50214, *Flat polyvinyl chloride sheathed flexible cables*

EN 50274, *Low-voltage switchgear and controlgear assemblies — Protection against electric shock — Protection against unintentional direct contact with hazardous live parts*

3 Terms and definitions

For the purposes of this document, the following terms and definitions apply.

ISO and IEC maintain terminological databases for use in standardization at the following addresses:

— ISO Online browsing platform: available at https://www.iso.org/obp

— IEC Electropedia: available at http://www.electropedia.org/

3.1
apron
smooth vertical part extending downwards from the sill of the landing or car entrance

3.2
authorized person
person with the permission of the natural or legal person who has the responsibility for the operation and use of the lift, to access restricted areas (machinery spaces, pulley rooms and lift well) for maintenance, inspection or rescue operations

Note 1 to entry: Authorized persons should be competent for the tasks they have been authorized for (see also 3.7).

3.3
available car area
area of the car, which is available for passengers or goods during operation of the lift

3.4
balancing weight
mass which saves energy by balancing all or part of the mass of the car

© ISO 2019 – All rights reserved

Documents
Document Sharing Hub
Full document details: BS ISO 8100-1:2019

3.5
buffer
resilient stop at the end of travel, and comprising a means of braking using fluids or springs (or other similar means)

3.6
car
part of the lift which carries the passengers and/or other loads

3.7
competent person
person, suitably trained, qualified by knowledge and practical experience, provided with necessary instructions to safely carry out the required operations for maintaining or inspecting the lift, or rescuing users

Note 1 to entry: National regulations can require certification of competence.

3.8
counterweight
mass which ensures traction

3.9
direct acting lift
hydraulic lift where the ram or cylinder is directly attached to the car or its sling

3.10
down direction valve
electrically controlled valve in a hydraulic circuit for controlling the descent of the car

3.11
drive control system
system controlling and monitoring the running of the lift machine

3.12
electrical anti-creep system
combination of precautions for hydraulic lifts against the danger of creeping

3.13
electric safety chain
the total of the electric safety devices connected in such a way as to stop the lift when one of them is activated

3.14
full load pressure
static pressure exerted on the piping, jack, valve block, etc., with the car and rated load being at rest at the highest landing level

3.15
goods passenger lift
lift mainly intended for the transport of goods, which are generally accompanied by persons

3.16
guide rails
rigid components which provide guiding for the car, the counterweight or the balancing weight

3.17
headroom
part of the well between the highest landing served by the car and the ceiling of the well

© ISO 2019 – All rights reserved
Documents
Document Sharing Hub
Full document details: BS ISO 8100-1:2019

3.18
hydraulic lift
lift in which the lifting power is derived from an electrically driven pump transmitting hydraulic fluid to a jack, acting directly or indirectly on the car (multiple motors, pumps and/or jacks may be used)

3.19
indirect acting lift
hydraulic lift where the ram or cylinder is connected to the car or the car sling by suspension means (ropes, chains)

3.20
installer
legal or natural person taking responsibility to erect and commission the lift at its final location in the building

3.21
instantaneous safety gear
safety gear in which the full gripping action on the guide rails is almost immediate

3.22
jack
combination of a cylinder and a ram forming a hydraulic actuating unit

3.23
laminated glass
assembly of two or more glass layers, each of which is bonded together with one or more plastic or liquid interlayers

3.24
levelling
operation which achieves the accuracy of stopping at landings

3.25
levelling accuracy
vertical distance between car sill and landing sill during loading or unloading of the car

3.26
lift machine
unit which drives and stops the lift, including any motor, gear, brake, sheave/sprockets and drum (traction or positive drive lift) or comprising the pump, pump motor and control valves (hydraulic drive lift)

3.27
machine room
fully enclosed machinery space with ceiling, walls, floor and access door(s) in which machinery as a whole or in parts is placed

3.28
machinery
equipment such as: control cabinet(s) and drive system, lift machine, main switch(es), and means for emergency operations

3.29
machinery space
volume(s) inside or outside of the well where the machinery as a whole or in parts is placed, including the working areas associated with the machinery

Note 1 to entry: A machinery cabinet with its associated working area(s) is considered as a machinery space.

© ISO 2019 – All rights reserved

Documents
Document Sharing Hub
Full document details: BS ISO 8100-1:2019

3.30
maintenance
all the necessary operations to ensure the safe and intended functioning of the installation and its components after the completion of the installation and throughout its life cycle

Note 1 to entry: Maintenance can include:

a) lubrication, cleaning, etc.;

b) checks;

c) rescue operations;

d) operations of setting and adjustment;

e) repair or changing of components which can occur due to wear or tear and do not affect the characteristics of the installation.

3.31
non return valve
valve which allows flow in one direction only

3.32
one-way restrictor
valve which allows free flow in one direction and restricted flow in the other direction

3.33
overspeed governor
device which, when the lift attains a predetermined speed, causes the lift to stop, and if necessary, causes the safety gear to be applied

3.34
passenger
any person transported by a lift in the car

3.35
pawl device
mechanical device for stopping involuntary descent of the car, and maintaining it stationary on fixed supports

3.36
pit
the part of the well situated below the lowest landing served by the car

3.37
positive drive lift
lift which is directly driven (not reliant on friction) by drum and ropes or by sprockets and chains

Note 1 to entry: In this document, the term “positive drive lift” includes drum drive.

3.38
preliminary operation
energizing of the machine and the brake/hydraulic valve as preparation to a normal run when the car is in the door zone and doors are not closed and locked

3.39
pressure relief valve
valve which limits the pressure to a pre-determined value by exhausting fluid

© ISO 2019 – All rights reserved
Documents
Document Sharing Hub
Full document details: BS ISO 8100-1:2019

3.40
programmable electronic system in safety related applications for lifts
PESSRAL
system for control, protection or monitoring based on one or more programmable electronic devices, including all elements of the system such as power supplies, sensors and other input devices, data highways and other communication paths, and actuators and other output devices, used in safety-related applications as listed in Table A.1

3.41
progressive safety gear
safety gear in which retardation is effected by a braking action on the guide rails and for which special provisions are made so as to limit the forces on the car, counterweight or balancing weight to a permissible value

3.42
pulley room
room not containing the machine, in which pulleys are located, and in which the overspeed governor can also be housed

3.43
rated load
load which is intended to be carried in normal operation, which can include handling devices (see 0.4.2)

3.44
rated speed
v
speed in metres per second of the car for which the equipment has been built

Note 1 to entry: For hydraulic drive lifts:

— v_m is the rated speed upwards in metres per second;

— v_d is the rated speed downwards in metres per second;

— v_s is the higher value of both rated speeds v_m and v_d in metres per second.

3.45
re-levelling
operation, after the lift has stopped, to permit the stopping position to be corrected during loading or unloading

3.46
rescue operations
specific actions required to safely release persons entrapped in the car and well by competent persons

3.47
restrictor
valve in which the inlet and outlet are connected through a restricted passage way

3.48
rupture valve
valve designed to close automatically when the pressure drop across the valve, caused by the increased flow in a pre-determined flow direction, exceeds a pre-set amount

3.49
safety circuit
circuit containing contacts and/or electronic components which is regarded to fulfil demands of an electric safety device

3.50
safety component
component provided to fulfil a safety function when in use

© ISO 2019 – All rights reserved

Documents
Document Sharing Hub
Full document details: BS ISO 8100-1:2019

3.51
safety gear
mechanical device for stopping in the down direction, and maintaining stationary on the guide rails, the lift car, counterweight or balancing weight in case of overspeeding or breaking of the suspension

3.52
safety integrity level
SIL
discreet level (one out of a possible three) for specifying the safety-integrity requirements of the safety functions allocated to the programmable electronic safety-related system, where safety-integrity level 3 has the highest level of safety integrity and safety-integrity level 1 has the lowest

3.53
safety rope
auxiliary rope attached to the car, the counterweight or balancing weight for the purpose of tripping a safety gear in case of suspension failure

3.54
shut-off valve
manually operated two-way valve which can permit or prevent flow in either direction

3.55
single acting jack
jack in which displacement in one direction is by fluid action and in the other by influence of gravity

3.56
sling
metal framework carrying the car, counterweight or balancing weight, connected to the means of suspension

Note 1 to entry: This sling can be integral with the car enclosure.

3.57
special tool
tool unique to the equipment required in order to keep the equipment in a safe operating condition or for rescue operations

3.58
stopping accuracy
vertical distance between car sill and landing sill at the moment when a car is stopped by the control system at its destination floor and the doors reach their fully open position

3.59
traction lift
lift whose lifting ropes are driven by friction in the grooves of the driving sheave of the machine

3.60
travelling cable
flexible electric cable containing multiple cores between the car and a fixed point

3.61
type examination certificate
document issued by an approved body carrying out a type-examination in which it certifies that the product example under consideration complies with the provisions applicable to it

Note 1 to entry: For the process of type examination and definition of approved body, see ISO 8100-2.

3.62
unintended car movement
non-commanded movement of the car with doors open within the door zone away from the landing, excluding movements resulting from loading/unloading operation

© ISO 2019 – All rights reserved
Documents
Document Sharing Hub
Full document details: BS ISO 8100-1:2019

3.63
unlocking zone
zone, extending above and below the landing level, in which the car floor has to be to enable the corresponding landing door to be unlocked

3.64
user
person making use of the services of a lift installation which includes passengers, persons waiting at the landings and authorized persons

3.65
well
space in which the car, the counterweight or the balancing weight travels. This space is usually bounded by the bottom of the pit, the walls and the ceiling of the well

4 List of significant hazards

This clause contains all the significant hazards, hazardous situations and events, as far as they are dealt with in this document, identified by risk assessment as significant for this type of machinery and which require action to eliminate or reduce the risk (see Table 1).

Table 1 — List of significant hazards

No.	Hazards as listed in ISO 12100:2010, Annex B	Relevant subclauses
1	**Mechanical hazards** due to	
	Acceleration, deceleration (kinetic energy)	5.2.5; 5.3.6, 5.5.3; 5.6.2; 5.6.3; 5.6.6; 5.6.7; 5.8.2; 5.9.2; 5.9.3
	Approach of a moving element to a fixed part	5.2.5; 5.2.6; 5.5.8
	Falling objects	5.2.5; 5.2.6
	Gravity (stored energy)	5.2.5
	Height from the ground	5.3; 5.4.7; 5.5; 5.6
	High pressure	5.4.2; 5.9.3; See also 1.3
	Moving elements	5.2; 5.3; 5.4; 5.5; 5.6; 5.7; 5.8
	Rotating elements	5.5.7; 5.6.2; 5.9.1
	Rough, slippery surface	5.2.1; 5.2.2; 5.4.7
	Sharp edges	Not addressed. See 5.1.1
	Stability	See 0.4.3
	Strength	See 0.4.3
	Crushing hazard	5.2.5; 5.3
	Shearing hazard	5.3
	Entanglement hazard	5.5.7; 5.6.2; 5.9.1
	Drawing-in or trapping hazard	5.2.1; 5.3.1; 5.3.8; 5.4.11; 5.5.3; 5.5.7; 5.6.2; 5.9.1; 5.10.5; 5.12.1
	Impact hazard	5.8
	— Slip, trip and fall of persons (related to machinery)	5.2.1; 5.2.2; 5.3.11; 5.4.7; 5.3; 5.5; 5.6
	— Uncontrolled amplitude of movements	5.2.1; 5.2.5; 5.5.6; 5.8
	— From insufficient mechanical strength of parts	See 0.4.3
	— From inadequate design of pulleys, drums	5.5.3
	— Falling of person from person carrier	5.3; 5.4.3; 5.4.6; 5.4.7

© ISO 2019 – All rights reserved

Documents
Document Sharing Hub
Full document details: BS ISO 8100-1:2019

Table 1 *(continued)*

No.	Hazards as listed in ISO 12100:2010, Annex B	Relevant subclauses
2	**Electrical hazards**	
	Arc	5.11.2
	Live parts	5.2.6; 5.11.2; 5.12.1
	Overload	5.10.4
	Parts which have become live under faulty conditions	5.10.1; 5.10.2; 5.10.3; 5.11.2
	Short-circuit	5.10.3; 5.10.4, 5.11.1; 5.11.2
	Thermal radiation	5.10.1
3	**Thermal hazards**	
	Flame	5.3.6
	Objects or materials with a high or low temperature	5.10.1
	Radiation from heat sources	5.10.1
4	**Hazards generated by noise**	Not relevant (See 1.3)
5	**Hazards generated by vibration**	Not relevant (See 1.3)
6	**Hazards generated by radiation**	
	Low frequency electromagnetic radiation	5.10.1.1.3
	Radio frequency electromagnetic radiation	5.10.1.1.3
7	**Hazards generated by materials and substances**	
	Combustible	5.4.4
	Dust	5.2.1
	Explosive	Not addressed (See 1.2)
	Fibre	0.4.3
	Flammable	5.9.3
	Fluid	0.4.22; 5.2.1
8	**Hazards generated by neglecting ergonomic principles in machinery design** as, e.g. hazards from	
	Access	5.2.1; 5.2.2; 5.2.4; 5.2.5; 5.2.6; 5.6.2; 5.9.3; 5.12.1
	Design or location of indicators and visual displays units	5.2.6; 5.3.9; 5.12.1.1; 5.12.4
	Design, location or identification of control devices	5.4.8; 5.10.5; 5.10.8; 5.10.10; 5.12.1.1; 5.12.1.5
	Effort	5.2.1; 5.2.3; 5.2.5; 5.2.6; 5.3.8; 5.3.12; 5.3.14; 5.4.7; 5.9.2
	Local lighting	5.2.1; 5.2.2; 5.2.6; 5.3.10; 5.4.10; 5.10.1; 5.10.5; 5.10.7; 5.10.8
	Repetitive activity	5.12.1
	Visibility	5.2.5; 5.9.1; 5.12.1

© ISO 2019 – All rights reserved
Documents
Document Sharing Hub
Full document details: BS ISO 8100-1:2019

Table 1 *(continued)*

No.	Hazards as listed in ISO 12100:2010, Annex B	Relevant subclauses
9	**Hazards associated with the environment in which the machine is used**	
	Dust and fog	5.2.1
	Electromagnetic disturbance	5.10.1
	Moisture	5.2.1, 5.2.6
	Temperature	5.2.1; 5.2.6; 5.3.12; 5.9.3; 5.10.4
	Water	5.2.1; 5.2.6
	Wind	5.7.2.3.1 a) 2)
	Failure of the power supply	5.2.1; 5.2.3; 5.2.4; 5.2.5; 5.2.6; 5.3.12; 5.4.3; 5.4.6; 5.6.2; 5.9.2; 5.9.3; 5.12.1; 5.12.3
	Failure of the control circuit	5.6.7
	Unexpected start-up, unexpected overrun/overspeed (or any similar malfunction) from restoration of energy supply after an interruption	5.2.1; 5.2.6; 5.4.7; 5.6.2; 5.6.5; 5.6.6; 5.6.7; 5.8; 5.10.5; 5.12.2

5 Safety requirements and/or protective measures

5.1 General

5.1.1 Passenger and goods passenger lifts shall comply with the safety requirements and/or protective measures of the following clauses. In addition, the passenger and goods passenger lifts shall be designed according to the principles of ISO 12100 for hazards relevant but not significant that are not dealt with by this document (e.g. sharp edges).

5.1.2 All labels, notices, markings and operating instructions shall be permanently affixed, indelible, legible and readily understandable (if necessary aided by signs or symbols). They shall be of durable material, placed in a visible position, and written in the accepted language(s) of the country where the lift is installed.

5.2 Well, machinery spaces and pulley rooms

5.2.1 General provisions

5.2.1.1 Arrangement of lift equipment

5.2.1.1.1 All lift equipment shall be located in the well or in machinery spaces or pulley rooms.

5.2.1.1.2 If parts of different lifts are present in one machine and/or pulley room each lift shall be identified with a number, letter or colour consistently used for all parts (machine, controller, overspeed governor, switches, etc.).

© ISO 2019 – All rights reserved

Documents
Document Sharing Hub
Full document details: BS ISO 8100-1:2019

5.2.1.2 Exclusive use of the well, machine and pulley rooms

5.2.1.2.1 The well, machine and pulley rooms shall not be used for purposes other than lifts. They shall not contain ducts, cables or devices other than for the lift.

The lift well, machine and pulley rooms may, however, contain:

a) equipment for air-conditioning or heating of these spaces, excluding steam heating and high-pressure water heating. However, any control and adjustment devices of the heating apparatus shall be located outside the well.

b) fire detectors or extinguishers, with a high operating temperature (e.g. above 80° C), appropriate for the electrical equipment and suitably protected against accidental impact.

When sprinkler systems are used, activation of the sprinkler shall only be possible, when the lift is stationary at a landing and the electrical supply of the lift and lighting circuits are automatically switched off by the fire or smoke detection system.

NOTE Such smoke, fire detection and sprinkler systems are the responsibility of the building management.

5.2.1.2.2 Machine rooms may contain machines for other kinds of lifts, e.g. goods only lifts.

5.2.1.2.3 In the case of partially enclosed lift wells according to 5.2.5.2.3, the well is regarded as the area:

a) inside the enclosure where enclosures are present;

b) being within a horizontal distance of 1,50 m from movable components of the lift, where enclosures are missing.

5.2.1.3 Ventilation of the well, machinery spaces and pulley rooms

The well, machinery spaces and pulley rooms shall not be used to provide ventilation of rooms other than those belonging to the lift.

Ventilation shall be such that the motors and equipment, as well as electric cables, etc., are protected from dust, harmful fumes and humidity.

NOTE See E.3 for further guidance.

5.2.1.4 Lighting

5.2.1.4.1 The well shall be provided with permanently installed electric lighting, giving the following intensity of illumination, even when all doors are closed, at any position of the car throughout its travel in the well:

a) at least 50 lux, 1,0 m above the car roof within its vertical projection;

b) at least 50 lux, 1,0 m above the pit floor everywhere a person can stand, work and/or move between the working areas;

c) at least 20 lux outside of the locations defined in a) and b), excluding shadows created by car or components.

To achieve this, sufficient number of lamps shall be fixed throughout the well and, where necessary, additional lamp(s) may be fixed on the car roof as a part of the well's lighting system.

Lighting elements shall be protected against mechanical damage.

© ISO 2019 – All rights reserved
Documents
Document Sharing Hub
Full document details: BS ISO 8100-1:2019

The supply for this lighting shall be in conformity with 5.10.7.1.

NOTE For specific tasks additional temporary lighting can be necessary, e.g. by hand lamp.

The light meter should be oriented towards the strongest light source when taking lux level readings.

5.2.1.4.2 Machinery spaces and pulley rooms shall be provided with permanently installed electric lighting with an intensity of at least 200 lux at floor level everywhere a person needs to work, and 50 lux at floor level to move between working areas. The supply for this lighting shall be in conformity with 5.10.7.1.

NOTE This lighting can be part of the lighting of the well.

5.2.1.5 Electric equipment in the pit and in machinery spaces and pulley rooms

5.2.1.5.1 There shall be in the pit:

a) stopping device(s) visible and accessible on opening the door(s) to the pit, and from the pit floor, in conformity with the requirements of 5.12.1.11. The stopping device(s) shall be located as follows:

   1) For pits with depth less than or equal to 1,60 m, the stop switch shall be:

      — within a vertical distance of minimum 0,40 m above the lowest landing floor and a maximum of 2,0 m from the pit floor;

      — within a horizontal distance of maximum 0,75 m from the door frame inner edge.

   2) For pits with depth greater than 1,60 m, two stop switches shall be provided:

      — the upper switch within a vertical distance of minimum 1,0 m above the lowest landing floor and within a horizontal distance of maximum 0,75 m from the door frame inner edge;

      — the lower one within a maximum vertical distance of 1,20 m above pit floor operable from a refuge space.

   3) In the case of a pit access door, other than landing doors, a single stop switch, within a horizontal distance of maximum 0,75 m from the access door frame inner edge, at 1,20 m in height from the pit floor.

      Where there are two landing doors at the same level giving access to the pit, then one shall be determined as the pit access door, having the access equipment;

      NOTE The stop switch can be combined with the inspection station required in b).

b) a permanently installed inspection control station according to 5.12.1.5, operable within 0,30 m of a refuge space;

c) a socket outlet (see 5.10.7.2);

d) means to switch the well lighting (see 5.2.1.4.1), positioned within a maximum horizontal distance of 0,75 m from the pit access door frame inner edge and at a minimum height of 1,0 m above the access floor level.

5.2.1.5.2 There shall be in machinery spaces and pulley rooms:

a) a switch accessible only to authorized persons and placed close to each access point, at an appropriate height, controlling the lighting of the areas and spaces;

b) at least one socket outlet (see 5.10.7.2) provided at an appropriate place for each working area;

© ISO 2019 – All rights reserved

Documents
Document Sharing Hub
Full document details: BS ISO 8100-1:2019

c) a stopping device, in conformity with 5.12.1.11, installed in the pulley room, close to each point of access.

5.2.1.6 Emergency release

If no means to escape are provided for person(s) trapped in the well, alarm initiation devices to the alarm system according to EN 81-28 shall be installed at places where the risk of trapping exists (see 5.2.1.5.1, 5.2.6.4 and 5.4.7), operable from the refuge space(s).

If there is a risk of trapping in areas outside of the well, such risks should be discussed with the building owner [see 0.4.2 e)].

5.2.1.7 Handling of equipment

One or more suspension point(s) with the indication of the safe working load, as appropriate, shall be provided in the machinery spaces and where necessary, at the top of the well, conveniently positioned to permit the hoisting of heavy equipment (see 0.4.2 and 0.4.15).

5.2.1.8 Strength of walls, floors and ceilings

5.2.1.8.1 The structure of the well, machinery spaces and pulley rooms shall conform to national building regulations and shall be able to support at least the loads which can be applied by the machine; by the guide rails at the moment of safety gear operation, in the case of eccentric load in the car; by the action of the buffers; by those which can be applied by the anti-rebound device; by loading and unloading the car; etc. See also Annex E, E.1.

5.2.1.8.2 The walls of the well shall have a mechanical strength such that when a force of 1 000 N, being evenly distributed over an area of 0,30 m × 0,30 m in round or square section, is applied at right angles to the wall at any point on either face, they shall resist without:

a) permanent deformation greater than 1 mm;

b) elastic deformation greater than 15 mm.

5.2.1.8.3 Glass panels, plane or formed, shall be made of laminated glass.

They and their fixings shall withstand 1 000 N horizontal static force on an area of 0,30 m × 0,30 m at any point, from both inside and outside the well, without permanent deformation.

5.2.1.8.4 The floor of the pit shall be able to support beneath each guide rail, except hanging guide rails, the force due to the mass of the guide rails plus any load due to components fixed or linked to the guide(s) and/or any additional reaction, N, occurring during emergency stopping (e.g. load on traction sheave due to rebound when machine on rails), plus the reaction at the moment of operation of the safety gear and any push through force exerted by the guide rails clips (see 5.7.2.3.5).

5.2.1.8.5 The floor of the pit shall be able to support beneath the car buffer supports, four times the static load imposed by the mass of the fully loaded car, evenly distributed between the total number of car buffers [see Formula (1)]:

$$F = 4 \cdot g_n \cdot (P + Q) \tag{1}$$

where

© ISO 2019 – All rights reserved
Documents
Document Sharing Hub
Full document details: BS ISO 8100-1:2019

F is the total vertical force in newtons;

g_n is the standard acceleration of free fall, [9,81 (m/s^2)];

P is the mass of the empty car and components supported by the car, i.e. part of the travelling cable, compensating ropes/chains (if any), etc. in kilograms;

Q is the rated load (mass) in kilograms.

5.2.1.8.6 The floor of the pit shall be able to support beneath the counterweight buffer supports, four times the static load imposed by the mass of the counterweight, evenly distributed between the total number of counterweight buffers [see Formula (2)]:

$$F = 4 \cdot g_n \cdot (P + q \cdot Q) \tag{2}$$

where

F is the total vertical force in newtons;

g_n is the standard acceleration of free fall, [9,81 (m/s^2)];

P is the mass of the empty car and components supported by the car, i.e. part of the travelling cable, compensating ropes/chains (if any), etc. in kilograms;

Q is the rated load (mass) in kilograms;

q is the balance factor indicating the amount of counterbalance of the rated load by the counterweight.

5.2.1.8.7 For hydraulic lifts, the floor of the pit shall be able to support beneath each jack the loads and forces (in newtons) imposed to it.

5.2.1.8.8 For hydraulic lifts, the total vertical force imposed on the fixed stops during operation of the pawl device can be evaluated approximately according to the following formulae:

a) Pawl devices provided with energy accumulation type buffers [see Formula (3)]:

$$F = \frac{3 \cdot g_n \cdot (P + Q)}{n} \tag{3}$$

b) Pawl devices provided with energy dissipation type buffers [see Formula (4)]:

$$F = \frac{2 \cdot g_n \cdot (P + Q)}{n} \tag{4}$$

where

F is the total vertical force in newtons on fixed stops imposed during operation of pawl device;

g_n is the standard acceleration of free fall, [9,81 (m/s^2)];

n is the number of pawl devices;

P is the mass of the empty car and components supported by the car, i.e. part of the travelling cables, compensating ropes/chains (if any), etc. in kilograms;

Q is the rated load (mass) in kilograms.

© ISO 2019 – All rights reserved

Documents
Document Sharing Hub
Full document details: BS ISO 8100-1:2019

5.2.1.9 Surfaces of walls, floors and ceilings

Surfaces of walls, floors and ceilings of wells, machine and pulley rooms shall be in durable material not favouring the creation of dust, e.g. concrete, brick or blockwork.

The surface of the floor where a person needs to work or to move between working areas shall be of non-slip material.

NOTE 1 For guidance, see ISO 14122-2:2016, 4.2.4.6.

The floor of working areas shall be approximately level, except for any buffer and guide rail bases and water drainage devices.

After the building-in of guide rail fixings, buffers, any grids, etc., the pit shall be impervious to infiltration of water.

For hydraulic lifts, the space in which the power unit is situated and the pit shall be designed in such a way that it is impervious, so that all the fluid contained in the machinery placed in these areas is retained if it leaks out or escapes.

NOTE 2 National regulations can require the protection of hydraulic pipe routed through the building.

5.2.2 Access to well and to machinery spaces and pulley rooms

5.2.2.1 The well, machinery spaces and pulley rooms and the associated working areas shall be accessible. Provisions shall be made to allow access to spaces other than the car interior only to authorized persons. See also Annex D, Figure D.1.

5.2.2.2 The access way adjacent to any door/trap giving access to the well or to machinery spaces and pulley rooms shall be lit by a permanently installed electric lighting with an intensity of at least 50 lux.

NOTE National regulations can require lighting level greater than 50 lux.

5.2.2.3 If access to the lift for maintenance and rescue purposes is via private premises, then permanent access of authorized persons to the premises and relevant instructions shall be provided.

The manufacturer/installer should make the building designer/architect/owner aware of the agreement regarding access, fire, entrapment and also problems of security associated with lifts serving directly into private premises (see 0.4.2).

NOTE Access via private premises can be subject to national regulations.

5.2.2.4 A means to enter the pit shall be provided consisting of;

a) an access door where the pit depth exceeds 2,50 m;

b) either an access door or a ladder inside the well, easily accessible from the landing door, where the pit depth is not exceeding 2,50 m.

Any pit access door shall comply with the requirements of 5.2.3.

Ladders shall comply with Annex F.

Where there is a risk of the ladder in its deployed position colliding with moving elements of the lift, the ladder shall be provided with an electric safety device(s) in accordance with 5.11.2 to prevent the lift from operating if the ladder is not in its stored position.

If the ladder is stored on the pit floor, all pit refuge spaces shall be maintained when the ladder is in its stored position.

© ISO 2019 – All rights reserved
Documents
Document Sharing Hub
Full document details: BS ISO 8100-1:2019

5.2.2.5 A safe access for persons to machinery spaces and pulley rooms shall be provided. For preference, this should be effected entirely by way of stairs. If it is not possible to install stairs, ladders satisfying the following requirements shall be used:

a) the access to the machinery spaces and pulley rooms shall not be situated more than 4 m above the level accessible by stairs. For access over 3 m in height by ladder, fall protection shall be provided;

b) ladders shall be fastened to the access permanently or at least by rope or chain in such a way that they cannot be removed;

c) ladders exceeding 1,50 m in height shall, when in position for access, form an angle between 65° and 75° to the horizontal and shall not be liable to slip or turn over;

d) the clear width of the ladder shall be at least 0,35 m, the depth of the steps shall not be less than 25 mm and in the case of vertical ladders the distance between the steps and the wall behind the ladder shall not be less than 0,15 m. The steps shall be designed for a load not less than 1 500 N;

e) adjacent to the top end of the ladder there shall be at least one hand hold within easy reach;

f) around a ladder, within a horizontal distance of 1,50 m, the risk of falling by more than the height of the ladder shall be prevented.

NOTE National building regulations can require access only by stairs.

5.2.3 Access and emergency doors — Access trap doors — Inspection doors

5.2.3.1 When the distance between consecutive landing door sills exceeds 11 m, one of the following conditions shall be fulfilled. There shall be:

a) intermediate emergency doors; or

b) adjacent cars each fitted with an emergency door, provision for which is made in 5.4.6.2.

NOTE "Consecutive" is understood as meaning two adjacent floors, with landing doors, regardless of open through or open adjacent configurations.

5.2.3.2 Access and emergency doors, access trap doors and inspection doors shall have the following dimensions:

a) access doors to machine rooms and access doors to the well shall have a minimum height of 2,0 m and a minimum width of 0,60 m;

b) access doors to pulley rooms shall have a minimum height of 1,40 m and a minimum width of 0,60 m;

c) access trap doors for persons to machine and pulley rooms shall give a clear passage of at least 0,80 m × 0,80 m, and shall be counterbalanced;

d) emergency doors shall have a minimum height of 1,80 m and a minimum width of 0,50 m;

e) inspection doors shall have a maximum height of 0,50 m and a maximum width of 0,50 m and shall have sufficient dimensions to carry out the required work through the door.

5.2.3.3 Access and emergency doors and inspection doors shall:

a) not open towards the inside of the well or machine or pulley room;

b) be provided with a key-operated lock, capable of being reclosed and relocked without a key;

c) be openable from inside the well, machine or pulley room without a key, even when locked;

© ISO 2019 – All rights reserved

Documents
Document Sharing Hub
Full document details: BS ISO 8100-1:2019

d) be provided with an electric safety device in conformity with 5.11.2, checking the closed position;

An electric safety device is not required in the case of access door(s) to machine and pulley rooms and in the case of access door(s) to the pit (5.2.2.4), if the pit door(s) does not give access to a hazardous zone. This is regarded to be the case if the free vertical distance between the lowest parts of car, counterweight or balancing weight including guide shoes, apron, etc. during normal operation and the bottom of the pit is at least 2 m.

The presence of travelling cables, compensating ropes/chains and their equipment, tensioning pulleys for the overspeed governor and similar installations is not regarded as being hazardous;

e) be imperforate, satisfy the same requirements for mechanical strength as the landing doors, and comply with the regulations relevant to the fire protection for the building concerned;

f) have a mechanical strength such that when a force of 1 000 N, being evenly distributed over an area of 0,30 m × 0,30 m in round or square section, is applied at right angles at any point from outside the well, it shall resist without elastic deformation greater than 15 mm.

5.2.3.4 Access trap doors, when they are closed, shall be able to support 2 000 N on an area of 0,20 m × 0,20 m at any position.

Trap doors shall not open downwards. Hinges, if any, shall be of a type which cannot be unhooked.

Trap doors used only for access of material may be locked from the inside only.

When a trap door is in the open position, precautions shall be taken to prevent the fall of persons (e.g. a guardrail) and prevent the trapdoor from closing such as to cause a crushing hazard (e.g. by counterbalance).

NOTE National regulations can require a specific height for such protection from falls.

5.2.4 Notices

5.2.4.1 A notice bearing the following minimum inscription:

"Lift Machinery — Danger
Access forbidden to unauthorized persons"

shall be fixed to the outside of doors or trap-doors (excluding landing doors and doors of emergency and test panels) giving access to machine and pulley rooms.

In the case of trap-doors, a permanently visible notice shall indicate to those using the trap-door:

"Danger of falling — Reclose the trap-door"

5.2.4.2 Outside of the well, near the access doors and emergency doors, if any, there shall be a notice stating:

"Lift well — Danger
Access forbidden to unauthorized persons"

5.2.5 Well

5.2.5.1 General provisions

5.2.5.1.1 The well may contain one or more lift cars.

5.2.5.1.2 The counterweight or the balancing weight of a lift shall be in the same well as the car.

© ISO 2019 – All rights reserved
Documents
Document Sharing Hub
Full document details: BS ISO 8100-1:2019

5.2.5.1.3 For hydraulic lifts jacks shall be in the same well as the car. They may extend into the ground or other spaces.

5.2.5.2 Well enclosure

5.2.5.2.1 General

A lift shall be separated from the surroundings by:

a) walls, floor and ceiling; or

b) sufficient space.

5.2.5.2.2 Totally enclosed well

5.2.5.2.2.1 The well shall be totally enclosed by imperforate walls, floor and ceiling.

The only permissible openings are:

a) openings for landing doors;

b) openings for access and emergency doors to the well and inspection doors;

c) vent openings for escape of gases and smoke in the event of fire;

d) ventilation openings;

e) necessary openings for the functioning of the lift between the well and the machine or pulley rooms.

5.2.5.2.2.2 Any horizontal projection from a wall into the well or horizontal beam greater than 0,15 m width, including separator beams, shall be protected from a person standing there, unless access is prevented by a car top balustrade in accordance with 5.4.7.4.

Protection shall be such as:

a) the projection, where greater than 0,15 m, shall be chamfered to at least 45° to the horizontal; or

b) a deflector forming an inclined surface of minimum 45° to the horizontal, capable of resisting a force of 300 N applied at right angles to the deflector at any point, distributed evenly over a surface of 5 cm^2 in round or square section, such that it shall resist:

   — without permanent deformation;

   — without elastic deformation greater than 15 mm.

5.2.5.2.3 Partially enclosed well

Where the well is required to be partially enclosed, e.g. observation lifts in connection with galleries or atriums, tower buildings, etc., the following apply:

a) the height of the enclosure at places normally accessible to persons shall be sufficient to prevent such persons from:

   1) being endangered by moving parts of the lift; and

   2) interfering with the safe operation of the lift by reaching lift equipment within the well, either directly or with hand-held objects;

b) the height is assumed to be sufficient if it is in conformity with Figures 1 and 2. i.e.:

   1) minimum 3,50 m at a landing door side;

© ISO 2019 – All rights reserved

Documents
Document Sharing Hub
Full document details: BS ISO 8100-1:2019

2) minimum 2,50 m at other sides and with a minimum horizontal distance of 0,50 m to moving parts of the lift.

If the distance to moving parts exceeds 0,50 m, the value of 2,50 m can be reduced progressively to a minimum height of 1,10 m in a distance of 2,0 m;

c) the enclosure shall be imperforate;

d) the enclosure shall be located within 0,15 m maximum of the edges of floors, stairs or platforms (see Figure 1) or be protected in accordance with 5.2.5.2.2.2;

e) provisions shall be taken to prevent the interference with the operation of the lift by other equipment [see 5.2.1.2.3 b) and 7.2.2 c)];

f) special precautions shall be taken for lifts exposed to weather (see 0.4.5), e.g. wall climbing lifts installed against the exterior walls of a building.

Dimensions in millimetres

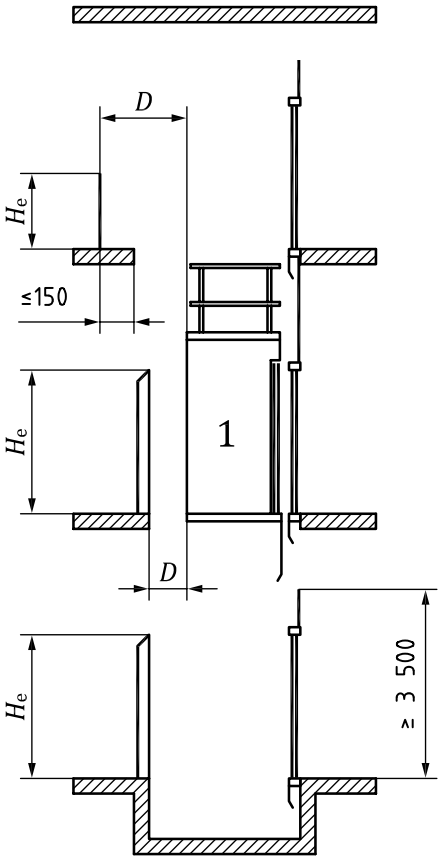

Key

1 car

D distance to moving parts of the lift (see Figure 2)

H_e height of the enclosure

Figure 1 — Partially enclosed well

© ISO 2019 – All rights reserved

Documents
Document Sharing Hub

Full document details: BS ISO 8100-1:2019

Dimensions in millimetres

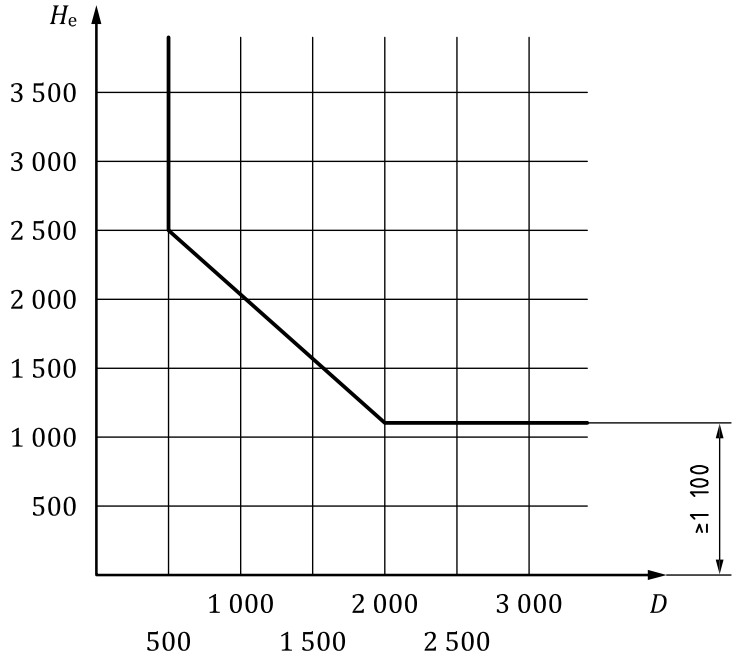

Key

H_e height of the enclosure

D distance to moving parts of the lift

Figure 2 — Partially enclosed well — Distances

5.2.5.3 Construction of the walls of the well and landing doors facing a car entrance

5.2.5.3.1 The horizontal distance between the inner surface of the well and the sill, door frame of the car or closing edge of car sliding doors shall not exceed 0,15 m, over the full height of the well (See Figure 3).

The distance given above:

a) may be extended to 0,20 m over a height not exceeding 0,50 m. There shall not be more than one of such recesses in between two consecutive landing doors;

b) may be extended to 0,20 m throughout the travel on goods passenger lifts in which the landing doors are vertically sliding;

c) is not limited if the car is provided with a mechanically locked door in accordance with 5.3.9.2, which can only be opened in the unlocking zone of a landing door.

The operation of the lift shall automatically depend on the locking of the corresponding car door except in the cases covered in 5.12.1.4 and 5.12.1.8. This locking shall be proved by an electric safety device in conformity with 5.11.2.

© ISO 2019 – All rights reserved

Documents
Document Sharing Hub
Full document details: BS ISO 8100-1:2019

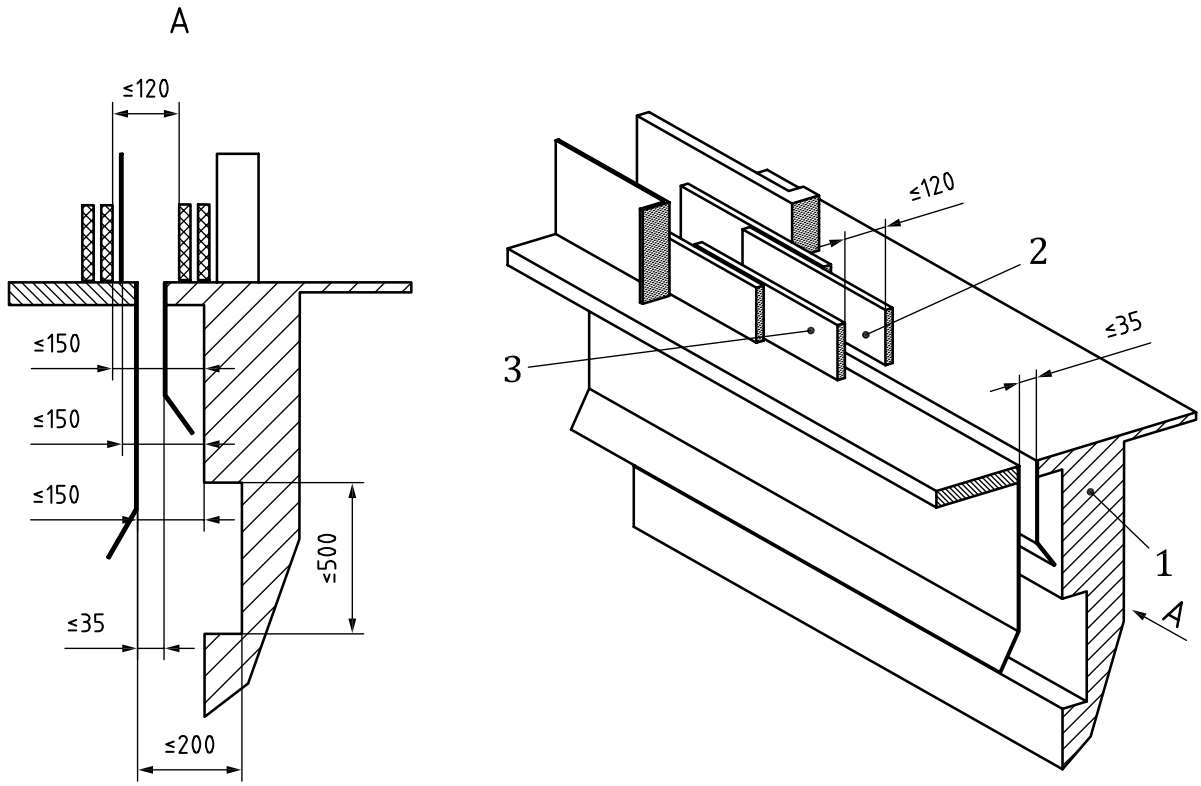

Key

1 lift well wall

2 landing door leading panel

3 car door leading panel

Figure 3 — Clearances between car and wall facing the car entrance

5.2.5.3.2 Below each landing door sill, the wall of the well shall comply with the following requirements:

a) it shall form a vertical surface which is directly connected to the landing door sill, whose height is at least half the unlocking zone plus 50 mm and whose width is at least the clear opening of the car access plus 25 mm on both sides;

b) this surface shall be continuous and be composed of smooth and hard elements, such as metal sheets, and shall be capable of withstanding a force of 300 N applied at a right angle to the wall at any point, being evenly distributed over an area of 5 cm^2 in round or square section, it shall resist:

   1) without permanent deformation;

   2) without elastic deformation greater than 15 mm;

c) any projections shall not exceed 5 mm. Projections exceeding 2 mm shall be chamfered at least 75° to the horizontal. Furthermore, it shall be either:

   1) connected to the lintel of the next door; or

   2) extended downwards using a hard smooth chamfer whose angle to the horizontal plane shall be at least 60°. The projection to this chamfer on the horizontal plane shall not be less than 20 mm.

5.2.5.4 Protection of any spaces located below the well

If accessible spaces do exist below the well, the base of the pit shall be designed for an imposed load of at least 5 000 N/m^2, and the counterweight or the balancing weight shall be equipped with safety gear.

© ISO 2019 – All rights reserved
Documents Document Sharing Hub
Full document details: BS ISO 8100-1:2019

5.2.5.5 Protection in the well

5.2.5.5.1 The travelling area of the counterweight or the balancing weight shall be guarded by means of a screen, which comply with the following:

a) if this screen is perforate, ISO 13857:2008, 4.2.4.1 shall be respected;

b) this screen shall extend from the lowest point of the counterweight resting on its fully compressed buffer(s) or balancing weight in its lowest position to a minimum height of 2,0 m from the pit floor;

c) in no case shall it be more than 0,30 m from the pit floor to the lowest part of the screen. For buffers travelling with the counterweight, see 5.8.1.1;

d) the width shall be at least equal to that of the counterweight or balancing weight;

e) if the gap between the counterweight/balancing weight guide rails and the well wall exceeds 0,30 m then this area shall also be guarded in accordance with b) and c);

f) the screen may have slot(s) with the minimum width necessary to permit free passage of compensation means or for the purpose of visual inspection;

g) the screen shall have sufficient rigidity to ensure that when a force of 300 N being evenly distributed over an area of 5 cm^2 in round or square section is applied at right angles at any point of the screen, it shall not deflect to cause the counterweight or balancing weight to collide with it;

h) the car and its associated components shall be at a distance of at least 50 mm from the counterweight or balancing weight (if there is one) and its associated components.

5.2.5.5.2 Where the well contains several lifts there shall be a partition between the moving parts of different lifts.

If this partition is perforate, ISO 13857:2008, 4.2.4.1 shall be respected.

The partition shall have sufficient rigidity to ensure that when a force of 300 N being evenly distributed over an area of 5 cm^2 in round or square section, is applied at right angles at any point of the partition, it shall not deflect to cause the moving parts to collide with it.

5.2.5.5.2.1 This partition shall extend from within 0,30 m from the pit floor to a height of 2,50 m above the floor of the lowest landing.

The width shall be sufficient as to prevent access from one pit to another.

Where the conditions of not giving access to a hazardous zone according to 5.2.3.3 d) are met, then such a partition screen shall not be provided below the lowest point of travel of the car.

5.2.5.5.2.2 The partition shall extend through the full height of the well if the horizontal distance between the inner edge of any balustrade and a moving part (car, counterweight or balancing weight) of an adjacent lift is less than 0,50 m.

This partition shall be at least the width of the moving part and extend a further 0,10 m on each side throughout the height of the well.

© ISO 2019 – All rights reserved

Documents
Document Sharing Hub
Full document details: BS ISO 8100-1:2019

5.2.5.6 Guided travel of car, counterweight and balancing weight

5.2.5.6.1 Extreme position of car, counterweight and balancing weight

5.2.5.6.1.1 The extreme positions of car, counterweight and balancing weight according to Table 2 shall be considered for requirements on guided travel according to 5.2.5.6, and refuge spaces and clearances according to 5.2.5.7 and 5.2.5.8.

Table 2 — Extreme positions of car, counterweight and balancing weight

Position	Traction drives	Positive drives	Hydraulic drives
Highest position of car	Counterweight on fully compressed buffer $+0{,}035v^2$ [a]	Car on fully compressed upper buffer	Ram in its ultimate position achieved through the means of ram stroke limitation $+0{,}035v_m{}^2$
Lowest position of car	Car on fully compressed buffer	Car on fully compressed lower buffer	Car on fully compressed buffer
Highest position of counterweight/balancing weight	Car on fully compressed buffer $+0{,}035v^2$	Car on fully compressed lower buffer	Car on fully compressed buffer $+0{,}035v_d{}^2$
Lowest position of counterweight/balancing weight	Counterweight on fully compressed buffer	Car on fully compressed upper buffer	Ram in its ultimate position achieved through the means of ram stroke limitation $+0{,}035v_m{}^2$

[a] $0{,}035v^2$ represents half the gravity stopping distance corresponding to 115 % of the rated speed: $\frac{1}{2}\cdot\frac{(1{,}15\cdot v)^2}{2\cdot g_n}=0{,}033\ 7\cdot v^2$, rounded to $0{,}035v^2$.

5.2.5.6.1.2 When for traction lifts the slowdown of the machine is monitored, in accordance with 5.12.1.3, the value of $0{,}035v^2$, in Table 2 may be reduced taking into account the speed at which the car or counterweight comes into contact with the buffer (see 5.8.2.2.2).

5.2.5.6.1.3 For traction lifts which are fitted with compensating ropes having a tensioning pulley equipped with an anti-rebound device (braking or lock-down device), the value of $0{,}035v^2$ in Table 2 may be replaced by a figure related to the possible travel of that pulley (depending on the roping used) plus 1/500 of the travel of the car, with a minimum of 0,20 m to take account of the elasticity of the ropes.

5.2.5.6.1.4 In the case of direct acting hydraulic lifts, the value of $0{,}035v^2$ mentioned in Table 2 need not be taken into account.

5.2.5.6.2 In the case of traction lifts

When the car or counterweight is at its highest position according to 5.2.5.6.1, its guide rail lengths shall be such as would accommodate a further guided travel of at least 0,10 m.

5.2.5.6.3 In the case of positive drive lifts

5.2.5.6.3.1 The guided travel of the car upwards from the top floor until it strikes the upper buffers shall be at least 0,50 m. The car shall be guided to the limit of its buffer stroke.

5.2.5.6.3.2 When the balancing weight, if there is one, is at its highest position according to 5.2.5.6.1, its guide rail lengths shall be such as would accommodate a further guided travel of at least 0,30 m.

© ISO 2019 – All rights reserved
Documents
Document Sharing Hub
Full document details: BS ISO 8100-1:2019

5.2.5.6.4 In the case of hydraulic lifts

5.2.5.6.4.1 When the car is at its highest position according to 5.2.5.6.1, its guide rail lengths shall be such as would accommodate a further guided travel of at least 0,10 m.

5.2.5.6.4.2 When the balancing weight, if there is one, is at its highest position according to 5.2.5.6.1, its guide rail lengths shall be such as would accommodate a further guided travel of at least 0,10 m.

5.2.5.6.4.3 With the balancing weight, if there is one, at its lowest position according to 5.2.5.6.1, its guided length shall be such as would accommodate a further guided travel of at least 0,10 m.

5.2.5.7 Refuge spaces on car roof and clearances in headroom

5.2.5.7.1 When the car is at its highest position according to 5.2.5.6.1, at least one clear area where a refuge space can be accommodated shall be provided on the car roof, selected from Table 3.

For type 2 refuge spaces, a reduction is allowed on one side at the lower edge where the refuge space touches the car roof. A reduction of 0,10 m wide by 0,30 m high may be included in order to accommodate parts fixed on the car roof (see Figure 4).

If more than one person is necessary on the car roof for carrying out inspection and maintenance work, an additional refuge space shall be provided for each additional person.

In the case of more than one refuge space, they shall be of the same type and not interfering with each other.

Dimensions in millimetres

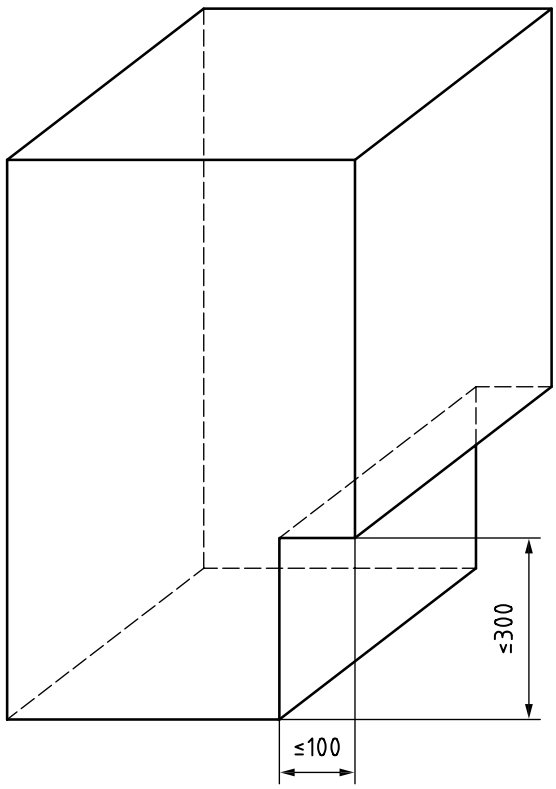

Figure 4 — Maximum dimensions of a reduction in the refuge space

© ISO 2019 – All rights reserved

Documents
Document Sharing Hub
Full document details: BS ISO 8100-1:2019

A sign on the car roof readable from the landings giving access to the car roof shall clearly indicate the allowed number of persons and the type of posture (Table 3) considered for the refuge space(s) accommodation.

Where a counterweight is used a sign shall be placed on or near the counterweight screen (see 5.2.5.5.1) stating the maximum allowed clearances between the counterweight and the counterweight buffer when the car is at its upmost landing level in order to maintain the car headroom dimensions.

Table 3 — Dimensions of refuge spaces in headroom

Type	Posture	Pictogram	Horizontal dimensions of the refuge space m	Height of the refuge space m
1	Upright		0,40 × 0,50	2,00
2	Crouching		0,50 × 0,70	1,00
NOTE The overhead obstacle warning sign ISO 7010:2011, W020 is incorporated in these safety signs.				

5.2.5.7.2 When the car is at its highest position according to 5.2.5.6.1, the clear distance between the lowest parts of the ceiling of the well (including beams and parts situated under the ceiling) (see Figure 5) and:

a) the highest pieces of equipment fixed on the roof, except for those covered in b) and c) below, shall be at least 0,50 m in any vertical or inclined direction within the projection of the car;

b) the highest part of the guide shoes or rollers, of the rope terminations and of the header or parts of vertically sliding doors, if any, shall be at least 0,10 m in any vertical direction within a horizontal distance of 0,40 m within the projection of the car;

c) the highest part of the balustrade shall be at least:

   1) 0,30 m within a horizontal distance of 0,40 m within the projection of the car and 0,10 m on the outside of the balustrade;

© ISO 2019 – All rights reserved
Documents
Document Sharing Hub
Full document details: BS ISO 8100-1:2019

2) 0,50 m in any inclined distance beyond 0,40 m within the projection of the car.

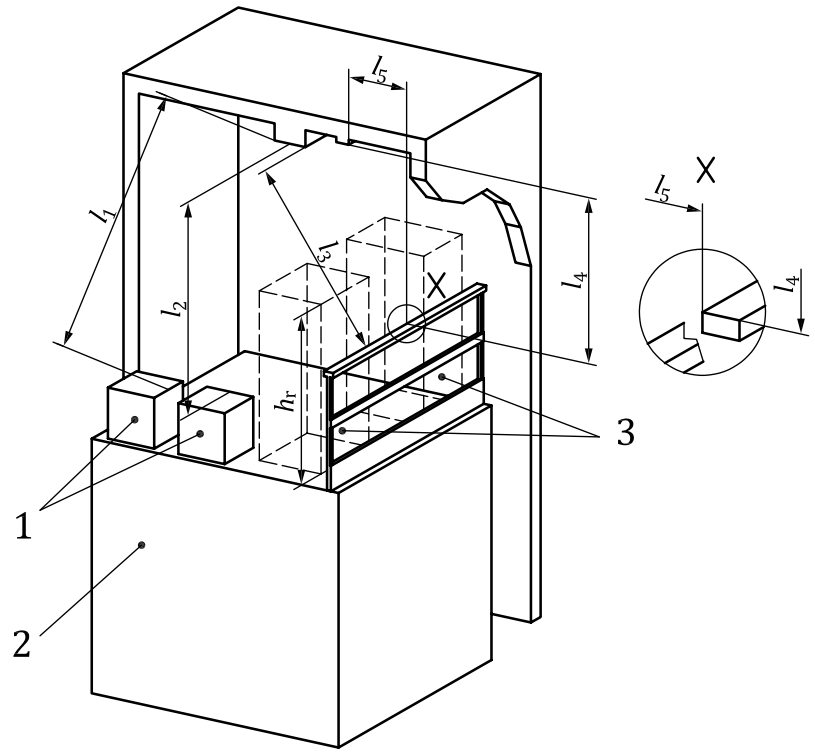

Key

l_1 distance ≥0,50 m [5.2.5.7.2 a)]
l_2 distance ≥0,50 m [5.2.5.7.2 a)]
l_3 distance ≥0,50 m [5.2.5.7.2 c) 2)]
l_4 distance ≥0,30 m [5.2.5.7.2 c) 1)]
l_5 distance ≤0,40 m [5.2.5.7.2 c) 1)]
1 highest parts installed on the car roof
2 car
3 refuge space(s)
h_r height of refuge spaces (Table 3)

Figure 5 — Minimum distances between parts fixed on car roof and lowest parts fixed to ceiling of well

5.2.5.7.3 Any single continuous area on the car roof, or on equipment on the car roof, with a minimum clear area of 0,12 m^2 and the minimum dimension of the smallest side being greater than 0,25 m, is considered as a place where a person can stand. When the car is at its highest position according to 5.2.5.6.1, the vertical clearance above any such area and the lowest parts of the ceiling of the well (including beams and parts situated under the ceiling), shall be the height of the relevant refuge space(s) according to 5.2.5.7.1.

5.2.5.7.4 The free vertical distance between the lowest parts of the ceiling of the well and the highest parts of an upward travelling ram-head assembly shall be at least 0,10 m.

© ISO 2019 – All rights reserved

Documents
Document Sharing Hub
Full document details: BS ISO 8100-1:2019

5.2.5.8 Refuge spaces and clearances in the pit

5.2.5.8.1 When the car is at its lowest position according to 5.2.5.6.1, at least one clear area where a refuge space can be accommodated shall be provided on the pit floor, selected from Table 4.

If more than one person is necessary in the pit to carry out inspection and maintenance work, an additional refuge space shall be provided for each additional person.

In the case of more than one refuge space, they shall be of the same type and not interfering with each other.

A sign in the pit readable from the entrance(s) shall clearly indicate the allowed number of persons and the type of posture (Table 4) considered for the refuge spaces(s) accommodation.

Table 4 — Dimensions of refuge spaces in the pit

Type	Posture	Pictogram	Horizontal dimensions of the refuge space m	Height of the refuge space m
1	Upright		0,40 × 0,50	2,00
2	Crouching		0,50 × 0,70	1,00
NOTE The overhead obstacle warning sign ISO 7010:2011, W020 is incorporated in these safety signs.				

© ISO 2019 – All rights reserved
Documents
Document Sharing Hub
Full document details: BS ISO 8100-1:2019

Table 4 *(continued)*

Type	Posture	Pictogram	Horizontal dimensions of the refuge space m	Height of the refuge space m
3	Laying		0,70 × 1,00	0,50
NOTE The overhead obstacle warning sign ISO 7010:2011, W020 is incorporated in these safety signs.				

5.2.5.8.2 When the car is at the lowest position according to 5.2.5.6.1, the following conditions shall be satisfied:

a) the free vertical distance between the bottom of the pit and the lowest parts of the car shall be at least 0,50 m. This distance may be reduced:

   1) for any part of the apron or parts of the vertically sliding car door(s) to a minimum of 0,10 m within a horizontal distance of 0,15 m to the adjacent wall(s);

   2) for car frame parts, safety gears, guide shoes, pawl devices, within a maximum horizontal distance from the guide rails according to Figures 6 and 7;

b) the free vertical distance between the highest parts fixed in the pit, for instance a tensioning device for compensation ropes being in its highest position, jack supports, pipes and other fittings, and the lowest parts of the car, except for items detailed in 5.2.5.8.2 a) 1) and 2), shall be at least 0,30 m;

c) the free vertical distance between the bottom of the pit or the top of equipment installed there and the lowest parts of the downwards-travelling ram-head assembly of an inverted jack shall be at least 0,50 m.

   However, if it is impossible to gain involuntary access under the ram head assembly (e.g. by providing screens in accordance with 5.2.5.5.1), this vertical distance may be reduced from 0,50 m to 0,10 m minimum;

d) the free vertical distance between the bottom of the pit and the lowest guiding yoke of a telescopic jack below the car of a direct acting lift shall be at least 0,50 m.

© ISO 2019 – All rights reserved

Documents
Document Sharing Hub
Full document details: BS ISO 8100-1:2019

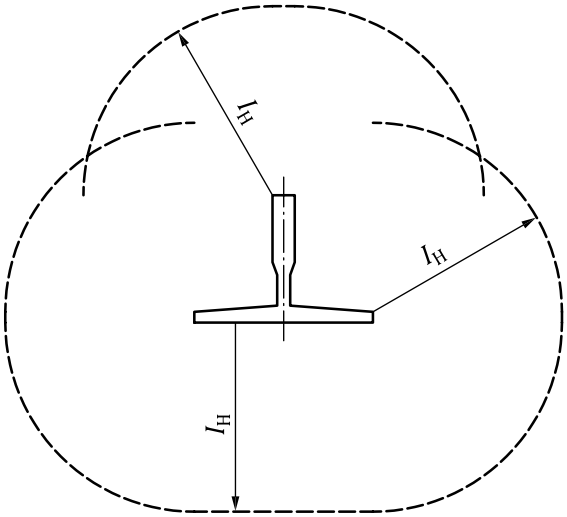

Key

I_H horizontal distance around guide rail

Figure 6 — Horizontal distance around guide rail

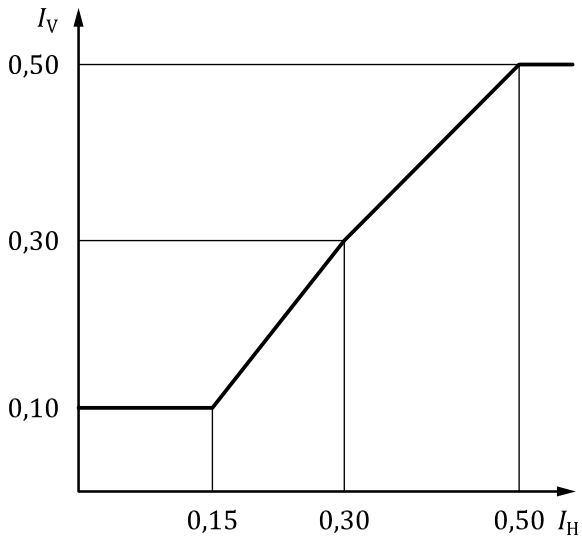

Key

I_V minimum vertical distance

I_H horizontal distance X_H [m]

Figure 7 — Minimum vertical distances for car frame parts, safety gear, guide shoes and pawl devices

5.2.6 Machinery spaces and pulley rooms

5.2.6.1 General provisions

The spaces and the associated working areas for maintenance/inspection work and emergency operation shall be suitably protected against environmental influences. See 0.3.3, 0.4.2 and 0.4.5.

© ISO 2019 – All rights reserved
Documents
Document Sharing Hub
Full document details: BS ISO 8100-1:2019

5.2.6.2 Notices and instructions

5.2.6.2.1 Notices shall be provided to permit easy identification of the main switch(es) and the light switch(es).

5.2.6.2.2 If, after release of a main switch, some parts remain live (interconnection between lifts, lighting, etc.) notice (s) shall indicate this.

5.2.6.2.3 In the machine room (5.2.6.3), the machinery cabinet (5.2.6.5.1) or at the emergency and tests panel(s) (5.2.6.6), there shall be detailed instructions [see 7.2.2 g), h) and i)] to be followed in the event of lift breakdown, particularly concerning the use of the device for rescue operations and the emergency unlocking key for landing doors.

5.2.6.3 Machinery in a machine room

5.2.6.3.1 Traction sheave in the well

The traction sheave may be installed in the well, provided that:

a) the examinations and the tests and the maintenance operations are able to be carried out from the machine room;

b) the openings between the machine room and the well are as small as possible.

5.2.6.3.2 Dimensions

5.2.6.3.2.1 The dimensions of machine rooms shall be sufficient to permit easy and safe working on equipment.

A clear height of at least 2,10 m at working areas shall be provided, and:

a) a clear horizontal area in front of the control panels and cabinets. This area is defined as follows:

   1) depth, measured from the external surface of the enclosures, at least 0,70 m;

   2) width, the greater of the following values: 0,50 m or the full width of the cabinet or panel;

b) a clear horizontal area of at least 0,50 m × 0,60 m for maintenance and inspection of moving parts at points where this is necessary and, if need be, manual emergency operation (5.9.2.3.1).

5.2.6.3.2.2 The clear height for movement shall not be less than 1,80 m.

The access ways to the clear spaces mentioned in 5.2.6.3.2.1 shall have a width of at least 0,50 m. This value may be reduced to 0,40 m where there are no moving parts or hot surfaces, as defined in 5.10.1.1.6.

This clear height for movement is taken to the underside of the lowest striking point and measured from the floor of the access area.

5.2.6.3.2.3 There shall be a clear vertical distance of at least 0,30 m above unprotected rotating parts of the machine.

5.2.6.3.2.4 When the machine room floor comprises a number of levels differing by more than 0,50 m, fixed ladders according to 5.2.2.5 or stairways and guardrails shall be provided.

© ISO 2019 – All rights reserved

Documents
Document Sharing Hub
Full document details: BS ISO 8100-1:2019

5.2.6.3.2.5 When the floor of the machine rooms has any recesses with a depth of more than 0,05 m and a width between 0,05 m and 0,50 m wide, or any ducts, they shall be covered. This applies only to areas where a person may work or move between different working areas.

Recesses with a width of more than 0,50 m shall be considered as different levels, see 5.2.6.3.2.4.

5.2.6.3.3 Other openings

The dimension of holes in the slab and room floor shall be reduced to a minimum for their purpose.

With the aim of removing the danger of objects falling through openings situated above the well, including those for electric cables, ferrules shall be used, which project at least 50 mm above the slab or finished floor.

5.2.6.4 Machinery inside the well

5.2.6.4.1 General provisions

5.2.6.4.1.1 In the case of wells partially enclosed at the exterior of buildings, the machinery shall be suitably protected against environmental influences.

5.2.6.4.1.2 The clear height for moving inside the well from one working area to another one shall not be less than 1,80 m.

5.2.6.4.1.3 In the case of:

— a retractable platform (5.2.6.4.5) and/or movable stops [5.2.6.4.5.2 b)]; or

— manually operated mechanical device (5.2.6.4.3.1, 5.2.6.4.4.1),

a clear notice(s) giving all the necessary instructions for operation shall be affixed at an appropriate place(s) in the well.

5.2.6.4.2 Dimensions of working areas inside the well

5.2.6.4.2.1 The dimensions of working areas at the machinery shall be sufficient to permit easy and safe working on equipment.

A clear height of at least 2,10 m at working areas shall be provided, and:

a) a clear horizontal space in front of the control panels and cabinets. This area is defined as follows:

   1) depth, measured from the external surface of the enclosures, at least 0,70 m;

   2) width, the greater of the following values: 0,50 m or the full width of the cabinet or panel;

b) a clear horizontal area of at least 0,50 m × 0,60 m for maintenance and inspection of parts at points where this is necessary.

5.2.6.4.2.2 There shall be a clear vertical distance of at least 0,30 m above unprotected rotating parts of the machine.

5.2.6.4.3 Working areas in the car or on the car roof

5.2.6.4.3.1 Where maintenance/inspection work on the machinery is to be carried out from inside the car or from the car roof, and if any kind of uncontrolled or unexpected car movement resulting from maintenance/inspection can be dangerous to persons, the following applies:

© ISO 2019 – All rights reserved
Documents
Document Sharing Hub
Full document details: BS ISO 8100-1:2019

a) any dangerous movement of the car shall be prevented by a mechanical device;

b) all movement of the car shall be prevented by means of an electric safety device in conformity with 5.11.2 unless the mechanical device is in its inactive position;

c) when this mechanical device is in its active position and cannot be disengaged due to forces exerted on it; it shall be possible to leave the well:

   1) via the landing door by a clear opening of at least 0,50 m × 0,70 m above the car door header/door drive;

   2) via the car by access through an emergency trap door in the car roof according to 5.4.6. Steps, ladder and/or hand hold(s) shall be provided to allow a safe descent into the car; or

   3) via an emergency door as described in 5.2.3.

Instructions regarding the escape procedure shall be given in the lift documentation.

5.2.6.4.3.2 The necessary devices for emergency operation and for dynamic tests shall be arranged so that they can be carried out from outside of the well in accordance with 5.2.6.6.

5.2.6.4.3.3 If inspection doors are located in the walls of the car, they shall:

a) comply with 5.2.3.2 e);

b) in the case of inspection doors with a width of more than 0,30 m, be provided with a barrier to avoid falling into the well;

c) not open towards the outside of the car;

d) be provided with a key-operated lock, capable of being reclosed and relocked without a key;

e) be provided with an electric safety device in conformity with 5.11.2, checking the locked position;

f) satisfy the same requirements as the walls of the car.

5.2.6.4.3.4 Where it is necessary to move the car from inside with an open inspection door, the following applies:

a) an inspection control station according to 5.12.1.5 shall be available near the inspection door;

b) this inspection control station shall be accessible only to authorized persons, e.g. by placing it behind the inspection door, and arranged so that it is not possible to use it to drive the car when standing on the car roof;

c) if the smaller dimension of the opening exceeds 0,20 m the clear horizontal distance between the outside edge of the opening in the car wall and equipment installed in the well in front of that opening shall be at least 0,30 m.

5.2.6.4.4 Working areas in the pit

5.2.6.4.4.1 Where machinery is to be maintained or inspected from the pit, and if any kind of uncontrolled or unexpected car movement resulting from maintenance/inspection can be dangerous to persons, the following applies:

a) a permanently installed device shall be provided to mechanically stop the car with any load up to rated load and from any speed up to rated speed to create a free distance of at least 2 m between the floor of the working area and the lowest parts of the car, excluding those mentioned in 5.2.5.8.2 a) 1) and 2). The retardation of the car by mechanical devices other than safety gears shall not exceed that produced by the buffers (see 5.8.2);

© ISO 2019 – All rights reserved

Documents
Document Sharing Hub
Full document details: BS ISO 8100-1:2019

b) the mechanical device shall be able to maintain the car stopped;

c) the mechanical device can be operated manually or automatically;

d) the opening by the use of a key of any door providing access to the pit shall be checked by an electric safety device according to 5.11.2, which prevents all further movement of the lift. Movement shall only be possible under the requirements given in f) below;

e) all movement of the car shall be prevented by means of an electric safety device in conformity with 5.11.2 unless the mechanical device is in its inactive position;

f) when the mechanical device is in its active position as checked by means of an electric safety device in conformity with 5.11.2, electrically driven movement of the car shall only be possible from the inspection control station(s);

g) the return of the lift to normal operation shall only be made by operation of an electrical reset device placed outside of the well and accessible to authorized persons only, e. g. inside a locked cabinet.

5.2.6.4.4.2 When the car is in the position according to 5.2.6.4.4.1 a), it shall be possible to leave the pit either:

a) through a vertical gap from the landing door level to the lowest edge of the car apron of at least 0,50 m; or

b) through an access door to the pit.

5.2.6.4.4.3 The necessary devices for emergency operation and for dynamic tests shall be arranged so that they can be carried out from outside of the well in accordance with 5.2.6.6.

5.2.6.4.5 Working areas on a platform

5.2.6.4.5.1 Where machinery is to be maintained or inspected from a platform, it shall be:

a) permanently installed; and

b) retractable if it is in the travel path of the car or counterweight/balancing weight.

5.2.6.4.5.2 Where machinery is to be maintained or inspected from a platform positioned into the travel path of the car, the counterweight or the balancing weight:

a) the car shall be stationary by using a mechanical device in conformity with 5.2.6.4.3.1 a) and b); or

b) where the car needs to be moved, the travel path of the car shall be limited by movable stops in such a way that the car is stopped:

   1) at least 2 m above the platform if the car runs down with rated speed towards the platform;

   2) below the platform in compliance with 5.2.5.7.2, if the car runs up with rated speed towards the platform.

5.2.6.4.5.3 The platform shall be:

a) able to support at any position the mass of two persons, each counting for 1 000 N over an area of 0,20 m × 0,20 m without permanent deformation. If the platform is intended to be used for handling heavy equipment, the dimensions shall be considered accordingly, and the platform shall have a mechanical strength to withstand the loads and forces to which it is intended to be subjected (see 5.2.1.7). The maximum permissible load shall be indicated on the platform;

b) provided with a balustrade in conformity with 5.4.7.4;

© ISO 2019 – All rights reserved
Documents
Document Sharing Hub
Full document details: BS ISO 8100-1:2019

c) equipped with means ensuring that:

1) the step rise between the floor of the platform and the level of the access does not exceed 0,50 m;

2) it shall not be possible to pass a ball with a diameter of 0,15 m through any gap between the platform and the sill of the access door.

5.2.6.4.5.4 In addition to 5.2.6.4.5.3, any retractable platform shall be provided with:

a) an electric safety device in conformity with 5.11.2, checking the fully retracted position;

b) means for putting it into or removing it from the working position. This operation shall be possible from the pit or by means located outside of the well and accessible only to authorized persons. The manual effort for operation of the platform shall not exceed 250 N;

c) if the access to the platform is not through a landing door, the opening of the access door shall be impossible when the platform is not in the working position, or alternatively, means shall be provided to prevent persons from falling into the well.

5.2.6.4.5.5 In the case of 5.2.6.4.5.2 b), movable stops shall be automatically operated when the platform is lowered. They shall be provided with:

a) buffers in conformity with 5.8;

b) an electric safety device in conformity with 5.11.2, which only allows car movement if the stops are in their fully retracted position;

c) an electric safety device in conformity with 5.11.2, which only allows car movement with a lowered platform if the stops are in their fully extended position.

5.2.6.4.5.6 Where it is necessary to move the car from the platform, an inspection control station according to 5.12.1.5 shall be available for use on the platform.

When the movable stop(s) is(are) in its active position, electrically driven movement of the car shall only be possible from the inspection control station(s).

5.2.6.4.5.7 The necessary devices for emergency operation and dynamic tests shall be arranged so that they can be carried out from outside of the well in conformity with 5.2.6.6.

5.2.6.4.5.8 The maximum permissible load shall be indicated on the platform.

5.2.6.4.6 Working areas outside of the well

When the machinery is in the well and is intended to be maintained/inspected from outside of the well, the working areas in accordance with 5.2.6.3.2.1 and 5.2.6.3.2.2 may be provided outside of the well. Access to this equipment shall only be possible by an inspection door in conformity with 5.2.3.

5.2.6.5 Machinery outside of the well

5.2.6.5.1 Machinery cabinet

5.2.6.5.1.1 The machinery of a lift shall be located inside a cabinet which shall not be used for purposes other than the lift. It shall not contain ducts, cables or devices other than for the lift.

© ISO 2019 – All rights reserved

Documents
Document Sharing Hub
Full document details: BS ISO 8100-1:2019

5.2.6.5.1.2 The machinery cabinet shall consist of imperforate walls, floor, roof and door(s).

The only permissible openings are:

a) ventilation openings;

b) necessary openings for the functioning of the lift between the well and the machinery cabinet;

c) vent openings for escape of gases and smoke in the event of fire.

These openings when accessible to non-authorized persons shall comply with the following requirements:

— protection according to ISO 13857:2008, Table 5 against contact with danger zones; and

— degree of protection of at least IP2XD to IEC 60529 against contact with electrical equipment.

5.2.6.5.1.3 The door(s) shall:

a) have sufficient dimensions to carry out the required work through the open door;

b) not open towards the inside of the cabinet;

c) be provided with a key-operated lock, capable of being reclosed and relocked without a key.

5.2.6.5.2 Working area

The working area in front of a machinery cabinet shall comply with the requirements according to 5.2.6.4.2.

5.2.6.6 Devices for emergency and test operations

5.2.6.6.1 In the case of 5.2.6.4.3, 5.2.6.4.4 and 5.2.6.4.5, the necessary devices for emergency and test operations shall be provided on a panel(s) suitable for carrying out from outside of the well all emergency operations and dynamic tests of the lift such as tests of traction, safety gear, buffer, ascending car overspeed protection means, unintended car movement protection, rupture valve, restrictor, pawl device, cushioned stop and pressure. The panel(s) shall be accessible to authorized persons only.

If the emergency and test devices are not protected inside a machinery cabinet, they shall be enclosed with a suitable cover, which:

a) does not open towards the inside of the well;

b) is provided with a key-operated lock, capable of being reclosed and relocked without a key.

5.2.6.6.2 The panel(s) shall provide the following:

a) emergency operation devices according to 5.9.2.2.2.7 and 5.9.2.3 or 5.9.3.9, together with an intercom system in conformity with 5.12.3.2;

b) control equipment which enables dynamic tests to be carried out;

c) direct observation of the lift machine or display device(s), which gives indication of:

— the direction of movements of the car;

— the reaching of an unlocking zone; and

— the speed of the car.

© ISO 2019 – All rights reserved
Documents
Document Sharing Hub
Full document details: BS ISO 8100-1:2019

5.2.6.6.3 The devices on the panel(s) shall be lit by a permanently installed electric lighting with an intensity of at least 200 lux measured at the device.

A switch placed on, or close to, the panel shall control lighting of the panel(s).

The electrical supply for this lighting shall be in conformity with 5.10.7.1.

5.2.6.6.4 There shall be working areas according to 5.2.6.3.2.1 in front of emergency and test panels.

5.2.6.7 Construction and equipment of pulley rooms

5.2.6.7.1 Dimensions

5.2.6.7.1.1 Pulley room dimensions shall be sufficient to provide easy and safe access for authorized persons to all the equipment.

In particular:

a) the clear height for movement shall not be less than 1,50 m.

   This clear height for movement is taken to the underside of the lowest striking point and measured from the floor of the access area;

b) a clear horizontal area shall be provided, of at least 0,50 m × 0,60 m, for maintenance and inspection of moving parts at points where it is necessary.

   The access ways to these areas shall have a width of at least 0,50 m. This value may be reduced to 0,40 m where there are no moving parts or hot surfaces, as defined in 5.10.1.1.6.

5.2.6.7.1.2 There shall be a clear vertical distance of at least 0,30 m high above unprotected pulleys.

5.2.6.7.2 Openings

The dimensions of holes in the slab and pulley room floor shall be reduced to a minimum for their purpose.

With the aim of removing the danger of objects falling through openings situated over the well, including those for electric cables, ferrules shall be used which project at least 50 mm above the slab or finished floor.

5.3 Landing doors and car doors

5.3.1 General provisions

5.3.1.1 The openings in the well giving normal access to the car shall be provided with landing doors and the access to the car shall be through a car door.

5.3.1.2 The doors shall be imperforate.

5.3.1.3 When closed, the landing and car doors shall, apart from the necessary clearances, completely close the landing and car entrances.

5.3.1.4 When closed, the clearance between door panels, or between panels and uprights, lintels or sills, shall not exceed 6 mm. This value, due to wear, may reach 10 mm, with the exception of doors made from glass [see 5.3.6.2.2.1 i) 3]. These clearances are measured at the back of recesses, if present.

© ISO 2019 – All rights reserved

Documents
Document Sharing Hub
Full document details: BS ISO 8100-1:2019

5.3.1.5 In the case of hinged car doors, they shall strike stops to prevent them swinging outside the car.

5.3.2 Height and width of entrances

5.3.2.1 Height

Landing doors and car doors shall be such that a minimum clear height of the entrance is 2 m.

5.3.2.2 Width

The clear entrance of the landing doors shall not extend more than 50 mm in width beyond the clear car entrance on both sides.

5.3.3 Sills, guides, door suspension

5.3.3.1 Sills

Every landing and car entrance shall incorporate a sill of sufficient strength (see 5.7.2.3.6) to withstand the passage of loads being introduced into the car.

NOTE A slight counter slope provided in front of each landing sill helps to avoid water from washing, sprinklers, etc., draining into the well.

5.3.3.2 Guides

5.3.3.2.1 Landing and car doors shall be designed to prevent, during normal operation, derailment, mechanical jamming, or displacement.

5.3.3.2.2 Horizontally sliding landing and car doors shall be guided top and bottom.

5.3.3.2.3 Vertically sliding landing and car doors shall be guided at both sides.

5.3.3.3 Suspension of vertically sliding doors

5.3.3.3.1 Panels of vertically sliding landing and car doors shall be fixed to two independent suspension elements.

5.3.3.3.2 Suspension ropes, chains, belts shall be designed with a safety factor of at least 8.

5.3.3.3.3 The pitch diameter of suspension rope pulleys shall be at least 25 times the rope diameter.

5.3.3.3.4 Suspension ropes and chains shall be guarded against leaving the pulley grooves or sprockets.

5.3.4 Horizontal door clearances

5.3.4.1 The horizontal distance between the sill of the car and sill of the landing doors shall not exceed 35 mm (see Figure 3).

5.3.4.2 The horizontal distance giving access to the well between the leading edges of the car door and the landing doors during the whole of their normal operation shall not exceed 0,12 m (see Figure 3).

Where additional building doors are added in front of the landing door, the trapping of persons in the space between should be avoided (see also 5.2.2.1 and 5.2.2.3).

© ISO 2019 – All rights reserved
Documents
Document Sharing Hub
Full document details: BS ISO 8100-1:2019