BS ISO 812:2017

BSI Standards Publication

Rubber, vulcanized or thermoplastic — Determination of low-temperature brittleness

Documents
Document Sharing Hub

Full document details: BS ISO 812:2017

National foreword

This British Standard is the UK implementation of ISO 812:2017. It supersedes BS ISO 812:2011, which is withdrawn.

The UK participation in its preparation was entrusted to Technical Committee PRI/22, Testing and analysis of rubber.

A list of organizations represented on this committee can be obtained on request to its secretary.

This publication does not purport to include all the necessary provisions of a contract. Users are responsible for its correct application.

© The British Standards Institution 2017
Published by BSI Standards Limited 2017

ISBN 978 0 580 97184 6

ICS 75.160.10

Compliance with a British Standard cannot confer immunity from legal obligations.

This British Standard was published under the authority of the Standards Policy and Strategy Committee on 30 September 2017.

Amendments/corrigenda issued since publication

Date	Text affected

Documents
Document Sharing Hub

Full document details: BS ISO 812:2017

INTERNATIONAL STANDARD

ISO 812

Fourth edition
2017-07

Rubber, vulcanized or thermoplastic — Determination of low-temperature brittleness

Caoutchouc vulcanisé ou thermoplastique — Détermination de la fragilité à basse température

Reference number
ISO 812:2017(E)

Documents
Document Sharing Hub

© ISO 2017

Full document details: BS ISO 812:2017

COPYRIGHT PROTECTED DOCUMENT

© ISO 2017, Published in Switzerland

All rights reserved. Unless otherwise specified, no part of this publication may be reproduced or utilized otherwise in any form or by any means, electronic or mechanical, including photocopying, or posting on the internet or an intranet, without prior written permission. Permission can be requested from either ISO at the address below or ISO's member body in the country of the requester.

ISO copyright office
Ch. de Blandonnet 8 • CP 401
CH-1214 Vernier, Geneva, Switzerland
Tel. +41 22 749 01 11
Fax +41 22 749 09 47
copyright@iso.org
www.iso.org

© ISO 2017 – All rights reserved

Documents
Document Sharing Hub

Full document details: BS ISO 812:2017

Contents

Page

Foreword ... **iv**
1 Scope ... **1**
2 Normative references ... **1**
3 Terms and definitions ... **1**
4 Apparatus and materials ... **2**
5 Calibration ... **4**
6 Test pieces ... **4**
7 Time interval between manufacture and testing ... **4**
8 Procedure ... **5**
8.1 Procedure A (determination of brittleness temperature) ... 5
8.2 Procedure B (determination of 50 % brittleness temperature) ... 5
8.3 Procedure C (testing at a specified temperature) ... 6
9 Precision ... **7**
10 Test report ... **7**
Annex A (informative) **Speed calibration of a solenoid-actuated low-temperature impact tester** ... **8**
Annex B (normative) **Calibration schedule** ... **11**
Annex C (informative) **Precision** ... **13**
Bibliography ... **15**

© ISO 2017 – All rights reserved

Documents
Document Sharing Hub
Full document details: BS ISO 812:2017

Foreword

ISO (the International Organization for Standardization) is a worldwide federation of national standards bodies (ISO member bodies). The work of preparing International Standards is normally carried out through ISO technical committees. Each member body interested in a subject for which a technical committee has been established has the right to be represented on that committee. International organizations, governmental and non-governmental, in liaison with ISO, also take part in the work. ISO collaborates closely with the International Electrotechnical Commission (IEC) on all matters of electrotechnical standardization.

The procedures used to develop this document and those intended for its further maintenance are described in the ISO/IEC Directives, Part 1. In particular the different approval criteria needed for the different types of ISO documents should be noted. This document was drafted in accordance with the editorial rules of the ISO/IEC Directives, Part 2 (see www.iso.org/directives).

Attention is drawn to the possibility that some of the elements of this document may be the subject of patent rights. ISO shall not be held responsible for identifying any or all such patent rights. Details of any patent rights identified during the development of the document will be in the Introduction and/or on the ISO list of patent declarations received (see www.iso.org/patents).

Any trade name used in this document is information given for the convenience of users and does not constitute an endorsement.

For an explanation on the voluntary nature of standards, the meaning of ISO specific terms and expressions related to conformity assessment, as well as information about ISO's adherence to the World Trade Organization (WTO) principles in the Technical Barriers to Trade (TBT) see the following URL: www.iso.org/iso/foreword.html.

This document was prepared by Technical Committee ISO/TC 45, *Rubber and rubber products*, Subcommittee SC 2, *Testing and analysis*.

This fourth edition cancels and replaces the third edition (ISO 812:2011), of which it constitutes a minor revision.

The changes compared to the previous edition are as follows:

— the normative references in Clause 2 have been updated;

— the definition of "failure" has been added in 3.4;

— a note has been added in 4.2.

© ISO 2017 – All rights reserved
Documents
Document Sharing Hub
Full document details: BS ISO 812:2017

Rubber, vulcanized or thermoplastic — Determination of low-temperature brittleness

WARNING 1 — Persons using this document should be familiar with normal laboratory practice. This document does not purport to address all of the safety problems, if any, associated with its use. It is the responsibility of the user to establish appropriate safety and health practices and to ensure compliance with any national regulatory conditions.

WARNING 2 — Certain procedures specified in this document might involve the use or generation of substances, or the generation of waste, that could constitute a local environmental hazard. Reference should be made to appropriate documentation on safe handling and disposal after use.

1 Scope

This document specifies a method for determining the lowest temperature at which rubber materials do not exhibit brittle failure or the temperature at which half of the test pieces used in a test fail when impacted under specified conditions.

The temperatures thus determined do not necessarily relate to the lowest temperature at which the material can be used since the brittleness will be affected by the conditions of test and especially by the rate of impact. Data obtained by this method are, therefore, intended to be used to predict the behaviour of rubbers at low temperatures only in applications in which the conditions of deformation are similar to those specified in the test.

Three procedures are described:

— procedure A, in which the brittleness temperature is determined;

— procedure B, in which the brittleness temperature for 50 % failure is determined;

— procedure C, in which the test piece is impacted at a specified temperature.

Procedure C is used in the classification of rubber materials and for specification purposes.

NOTE A similar test for rubber-coated fabrics is described in ISO 4646.

2 Normative references

The following documents are referred to in the text in such a way that some or all of their content constitutes requirements of this document. For dated references, only the edition cited applies. For undated references, the latest edition of the referenced document (including any amendments) applies.

ISO 18899:2013, *Rubber — Guide to the calibration of test equipment*

ISO 23529, *Rubber — General procedures for preparing and conditioning test pieces for physical test methods*

3 Terms and definitions

For the purposes of this document, the following terms and definitions apply.

ISO and IEC maintain terminological databases for use in standardization at the following addresses:

— IEC Electropedia: available at http://www.electropedia.org/

— ISO Online browsing platform: available at http://www.iso.org/obp

Documents
Document Sharing Hub

© ISO 2017 – All rights reserved

Full document details: BS ISO 812:2017

3.1
brittleness temperature
lowest temperature at which none of a set of test pieces fractures due to low-temperature embrittlement when tested under the specified conditions

3.2
50 % brittleness temperature
temperature at which 50 % of a set of test pieces fractures due to low-temperature embrittlement when tested under the specified conditions

3.3
testing speed
relative linear velocity at impact between the striking edge of the test apparatus and a clamped test piece

3.4
failure
any crack, fissure or hole visible to the naked eye, or complete separation into two or more pieces

4 Apparatus and materials

4.1 Test piece clamp and striker, meeting the requirements of 4.1.1 to 4.1.3.

4.1.1 The test piece clamp shall be rigid and designed to hold the test piece(s) as cantilever beam(s). Each individual test piece shall be held firmly and securely in the clamp without distortion. A suitable example of a clamp is shown in Figure 1.

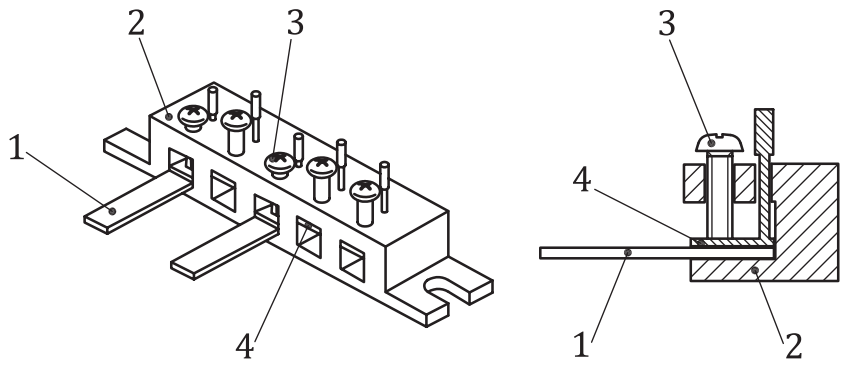

Key

1 test piece
2 body of clamp
3 holding screw
4 test piece holder

Figure 1 — Example of test piece clamp

4.1.2 The striking edge shall move relative to the test piece(s) along a path normal to the upper surface of the test piece(s) at a linear testing speed of 2,0 m/s ± 0,2 m/s at impact. The speed shall be maintained within this range for at least 6 mm of travel following the impact.

In order to obtain a speed within the specified limits during and after impact, care shall be taken to ensure that the striking energy is sufficient. It has been found that a striking energy of at least 3,0 J per test piece is necessary. It might, therefore, be necessary to limit the number of test pieces impacted at one time.

© ISO 2017 – All rights reserved
Documents
Document Sharing Hub
Full document details: BS ISO 812:2017