BS ISO 8124-4:2014+A2:2019

BSI Standards Publication

Safety of toys

Part 4: Swings, slides and similar activity toys for indoor and outdoor family domestic use

Documents
Document Sharing Hub

Full document details: BS ISO 8124-4:2014+A2:2019

National foreword

This British Standard is the UK implementation of ISO 8124-4:2014+A2:2019.

The start and finish of text introduced or altered by amendment is indicated in the text by tags. Tags indicating changes to ISO text carry the number of the ISO amendment. For example, text altered by ISO amendment A1 is indicated by [A1⟩ ⟨A1].

The UK participation in its preparation was entrusted to Technical Committee CW/15, Safety of toys.

A list of organizations represented on this committee can be obtained on request to its secretary.

This publication does not purport to include all the necessary provisions of a contract. Users are responsible for its correct application.

© The British Standards Institution 2019
Published by BSI Standards Limited 2019

ISBN 978 0 580 51787 7

ICS 97.200.50

Compliance with a British Standard cannot confer immunity from legal obligations.

This British Standard was published under the authority of the Standards Policy and Strategy Committee on 31 March 2019.

Amendments/corrigenda issued since publication

Date	Text affected

Documents
Document Sharing Hub

Full document details: BS ISO 8124-4:2014+A2:2019

INTERNATIONAL STANDARD

ISO 8124-4

Second edition
2014-10-01

Safety of toys —

Part 4:
Swings, slides and similar activity toys for indoor and outdoor family domestic use

Sécurité des jouets —

Partie 4: Balançoires, glissoires et jouets à activité similaire à usage domestique familial intérieur et extérieur

Reference number
ISO 8124-4:2014(E)

Documents
Document Sharing Hub

© ISO 2014

Full document details: BS ISO 8124-4:2014+A2:2019

COPYRIGHT PROTECTED DOCUMENT

© ISO 2014, Published in Switzerland

All rights reserved. Unless otherwise specified, no part of this publication may be reproduced or utilized otherwise in any form or by any means, electronic or mechanical, including photocopying, or posting on the internet or an intranet, without prior written permission. Permission can be requested from either ISO at the address below or ISO's member body in the country of the requester.

ISO copyright office
Ch. de Blandonnet 8 • CP 401
CH-1214 Vernier, Geneva, Switzerland
Tel. +41 22 749 01 11
Fax +41 22 749 09 47
copyright@iso.org
www.iso.org

© ISO 2014 – All rights reserved

Documents
Document Sharing Hub

Full document details: BS ISO 8124-4:2014+A2:2019

Contents

Page

Foreword ..... **v**
Introduction ..... **vi**
1 Scope **1**
2 Normative references **1**
3 Terms and definitions **1**
4 Requirements **6**
4.1 General 6
4.1.1 Static strength 6
4.1.2 Maximum height 6
4.1.3 Corners and edges 6
4.1.4 Protruding parts 7
4.1.5 Climbing and swinging ropes, chains and cables 10
4.1.6 Open tubing 11
4.2 Barriers 11
4.3 Rung ladders, stepladders and stairways 11
4.4 Entrapment 12
4.4.1 Head and neck entrapment 12
4.4.2 Entrapment of clothing and hair 13
4.4.3 Entrapment of feet 14
4.4.4 Entrapment of fingers 14
4.5 Stability of activity toys other than slides, swings and toys with crossbeams 14
4.5.1 General 14
4.5.2 Stability of activity toys with a free height of fall of 600 mm or less 15
4.5.3 Stability of activity toys with a free height of fall of more than 600 mm 15
4.6 Slides 15
4.6.1 Stability of slides 15
4.6.2 Retaining sides for slides 15
4.6.3 Starting, sliding and run-out section on slides 16
4.6.4 Roller slides 17
4.7 Swings 18
4.7.1 Stability of swings and other activity toys with crossbeams 18
4.7.2 Strength of crossbeams, swing devices, suspension connectors and suspension couplings 18
4.7.3 Swings intended for children under 36 months 18
4.7.4 Impact from swing elements 19
4.7.5 A2 Minimum clearance between adjacent swing elements and adjacent structures 19
4.7.6 Lateral stability of swing elements 20
4.7.7 Minimum clearance between swing elements and the ground 21
4.7.8 Suspension connectors and means of suspension 21
4.8 Seesaws 22
4.9 Carousels and rocking toys 22
4.10 Inflatable activity toys 22
4.10.1 General 22
4.10.2 Anchorage 22
4.10.3 Connection tubes for continuous inflation 23
4.10.4 Containment 23
4.11 Paddling pools 24
4.11.1 General 24
4.11.2 Edges, points, and small parts 24
4.11.3 Paddling pools with inflatable walls 25
5 Warnings and labelling **25**

AVA Documents
Document Sharing Hub

© ISO 2014 – All rights reserved

Full document details: BS ISO 8124-4:2014+A2:2019

5.1 Labelling ... 25
5.2 Assembly and installation instructions ... 25
5.2.1 General ... 25
5.2.2 Information on playground surfacing materials ... 26
5.2.3 Paddling pools ... 26
5.3 Maintenance instructions ... 26
5.4 Warnings ... 27
5.4.1 Drowning ... 27
5.4.2 Inflatable activity toys ... 27
5.4.3 Paddling pools ... 27

6 Test methods ... 28
6.1 Stability ... 28
6.1.1 Stability of activity toys with a free height of fall of 600 mm or less ... 28
6.1.2 Stability of activity toys with a free height of fall of more than 600 mm ... 29
6.1.3 Stability of slides ... 29
6.1.4 Stability of swings and other activity toys with crossbeams ... 30
6.1.5 Stability of toddler swings ... 33
6.2 Static strength ... 37
6.2.1 Strength of toys other than swings ... 37
6.2.2 Strength of swings and similar toys ... 37
6.3 Dynamic strength of barriers and handrails ... 38
6.3.1 Principle ... 38
6.3.2 Apparatus ... 38
6.3.3 Procedure ... 39
6.4 Determination of impact from swing elements ... 39
6.4.1 Principle ... 39
6.4.2 Apparatus ... 39
6.4.3 Procedure ... 41
6.4.4 Results ... 42
6.5 Test for head and neck entrapment ... 42
6.5.1 Head and neck entrapment in completely bound openings ... 42
6.5.2 Head and neck entrapment in partially bound and V-shaped openings ... 44
6.6 Toggle test ... 47
6.6.1 Principle ... 47
6.6.2 Apparatus ... 47
6.6.3 Procedure ... 48
6.7 Test for protrusions ... 50
6.7.1 All Protrusions ... 50
6.7.2 Protrusions in motion rides ... 52
6.8 Durability test for suspension connectors and means of suspension ... 53
6.8.1 Principle ... 53
6.8.2 Apparatus ... 53
6.8.3 Procedure ... 54
6.8.4 Alternate procedure ... 54
6.9 Deflation of inflatable activity toys ... 55
6.9.1 Principle ... 55
6.9.2 Apparatus ... 55
6.9.3 Procedure ... 55
6.10 Static load test for paddling pools with non-inflatable walls ... 55

Annex A (informative) **Rationale ... 57**

Annex B (informative) **Consumer information sheet for playground surfacing materials ... 61**

Annex C (informative) **Safety labelling guidelines for certain types of activity toys ... 62**

Bibliography ... 64

© ISO 2014 – All rights reserved
Documents
Document Sharing Hub
Full document details: BS ISO 8124-4:2014+A2:2019

Foreword

ISO (the International Organization for Standardization) is a worldwide federation of national standards bodies (ISO member bodies). The work of preparing International Standards is normally carried out through ISO technical committees. Each member body interested in a subject for which a technical committee has been established has the right to be represented on that committee. International organizations, governmental and non-governmental, in liaison with ISO, also take part in the work. ISO collaborates closely with the International Electrotechnical Commission (IEC) on all matters of electrotechnical standardization.

The procedures used to develop this document and those intended for its further maintenance are described in the ISO/IEC Directives, Part 1. In particular the different approval criteria needed for the different types of ISO documents should be noted. This document was drafted in accordance with the editorial rules of the ISO/IEC Directives, Part 2. www.iso.org/directives

Attention is drawn to the possibility that some of the elements of this document may be the subject of patent rights. ISO shall not be held responsible for identifying any or all such patent rights. Details of any patent rights identified during the development of the document will be in the Introduction and/or on the ISO list of patent declarations received. www.iso.org/patents

Any trade name used in this document is information given for the convenience of users and does not constitute an endorsement.

For an explanation on the meaning of ISO specific terms and expressions related to conformity assessment, as well as information about ISO's adherence to the WTO principles in the Technical Barriers to Trade (TBT), see the following URL: Foreword - Supplementary information

The committee responsible for this document is ISO/TC 181, *Safety of toys*.

This second edition cancels and replaces the first.edition (ISO 8124-4:2010) and amendment 1 (ISO 8124-4:2010/Amd.1:2012). This edition incorporates the amendments ISO 8124-4:2010/Amd.1:2012 and ISO 8124-4:2010/Amd.2:2014.

ISO 8124 consists of the following parts, under the general title *Safety of toys*:

— *Part 1: Safety aspects related to mechanical and physical properties*

— *Part 2: Flammability*

— *Part 3: Migration of certain elements*

— *Part 4: Swings, slides and similar activity toys for indoor and outdoor family domestic use*

— *Part 6: Certain phthalate esters in toys and children's products*

— *Part 8: Age determination guidelines*

The following parts are under preparation:

— *Part 5: Determination of total concentration of certain elements in toys*

— *Part 7: Requirements and test methods for finger paints*

© ISO 2014 – All rights reserved

Documents
Document Sharing Hub
Full document details: BS ISO 8124-4:2014+A2:2019

Introduction

This part of ISO 8124 is largely based upon existing standards in the European Union (EN 71-8) and in the United States (ASTM F1148).

However, it should not be construed that a toy manufactured in compliance with this part of ISO 8124 will be in full compliance with relevant national toy safety requirements in the market where the product is intended to be distributed. The user of this part of ISO 8124 is therefore advised to be aware of relevant national requirements.

Compliance with the requirements of this part of ISO 8124 will minimize potential hazards associated with toys resulting from their use in their intended play modes (normal use) as well as unintended play modes (reasonable foreseeable abuse).

This part of ISO 8124 will not, nor is it intended to, eliminate parental responsibility in the appropriate selection of toys. In addition, this part of ISO 8124 will not eliminate the need for parental supervision in situations where children of various ages may have access to the same toy(s).

© ISO 2014 – All rights reserved
Documents
Document Sharing Hub
Full document details: BS ISO 8124-4:2014+A2:2019

INTERNATIONAL STANDARD **ISO 8124-4:2014+A2:2019**

Safety of toys —

Part 4: Swings, slides and similar activity toys for indoor and outdoor family domestic use

1 Scope

This part of ISO 8124 specifies requirements and test methods for activity toys for domestic family use intended for children under 14 years to play on or in.

Products covered by this part of ISO 8124 include swings, slides, seesaws, carousels, rocking toys, climbing frames, fully enclosed toddler swing seats and other products intended to bear the mass of one or more children.

Products not included within the scope of this part of ISO 8124 are:

a) fitness and sporting equipment unless attached to the activity toy;

b) equipment intended for use in schools, day care centres, kindergartens, public playgrounds, restaurants, shopping centres and similar public places;

c) juvenile care products such as, but not limited to, infant swings, playpens/enclosures, beds or furniture including picnic tables, cradle rockers and products specifically designed for therapeutic use.

Inflatable activity toys are included in the scope of this part of ISO 8124. However, a powered blower used to continuously inflate the toy is not covered by this part of ISO 8124 since it is considered to be a household appliance and covered by requirements given in IEC 60335-2-80.

See A.1.

2 Normative references

The following documents, in whole or in part, are normatively referenced in this document and are indispensable for its application. For dated references, only the edition cited applies. For undated references, the latest edition of the referenced document (including any amendments) applies.

ISO 8124-1, *Safety of toys — Part 1: Safety aspects related to mechanical and physical properties*

3 Terms and definitions

For the purpose of this document, the terms and definitions given in ISO 8124-1 and the following apply.

3.1
activity toy
toy intended for family domestic use, intended to bear the mass of one or more children, the support structure of which remains stationary while the activity is taking place and which is intended for the performance by a child of any of the following activities: climbing, swinging, sliding, rocking, spinning, jumping, bouncing, crawling and creeping, or any combination thereof

EXAMPLE Swings, slides, carousels and climbing frames (see Figure 1).

© ISO 2014 – All rights reserved

Documents
Document Sharing Hub
Full document details: BS ISO 8124-4:2014+A2:2019

Note 1 to entry: Aquatic toys, paddling pools, trampolines and ride-on vehicles are not considered as activity toys in the context of this part of ISO 8124.

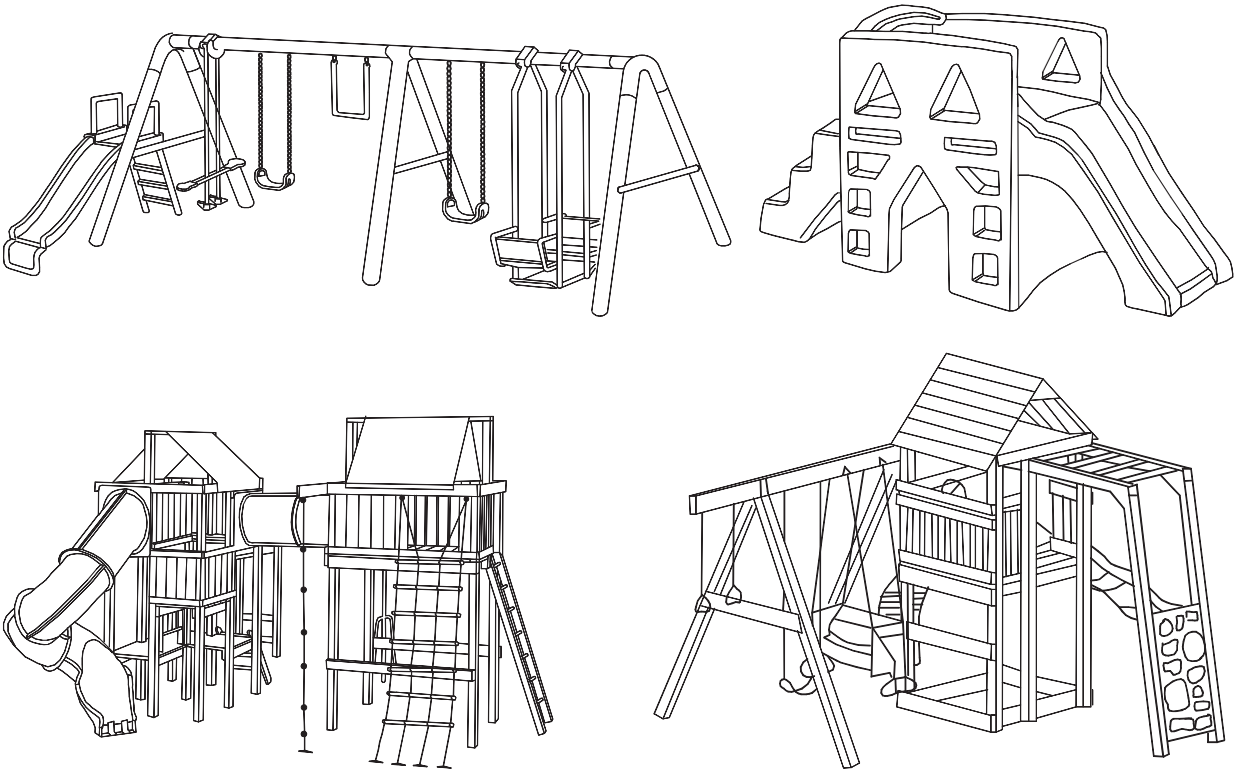

"Not to scale"

Figure 1 — Examples of activity toys

3.2
anchor
device used to fix the toy to the ground surface

3.3
attachment slide
slide for which access to the starting section is possible only by passing via other equipment or parts of other equipment

3.4
barrier
device intended to prevent children from falling from elevated surfaces

3.5
crossbeam
bar or beam which forms a main load-bearing part of the toy

3.6
entrapment
condition in which a body, part of a body or clothing becomes caught and impedes withdrawal

3.7
forced movement
movement where the direction and the extent of the child's movement is determined by the operation of the equipment, for example swinging, sliding, rocking or revolving

© ISO 2014 – All rights reserved
Documents
Document Sharing Hub
Full document details: BS ISO 8124-4:2014+A2:2019

3.8
free height of fall
greatest vertical distance from the intended body support, for example from the seat of a swing to the impact area below

3.9
free space
space in, on or around the activity toy that can be occupied by a user undergoing a forced movement by the equipment, for example swinging, sliding, rocking or revolving

Note 1 to entry: The definition of free space does not include the three-dimensional area in which a falling movement takes place.

3.10
fully enclosed toddler swing seats
fully enclosed single occupancy swing intended for young children who can sit upright unaided

Note 1 to entry: A seat is considered fully enclosed when a containment system is employed to support the child on all sides and in between the legs (see Figure 2).

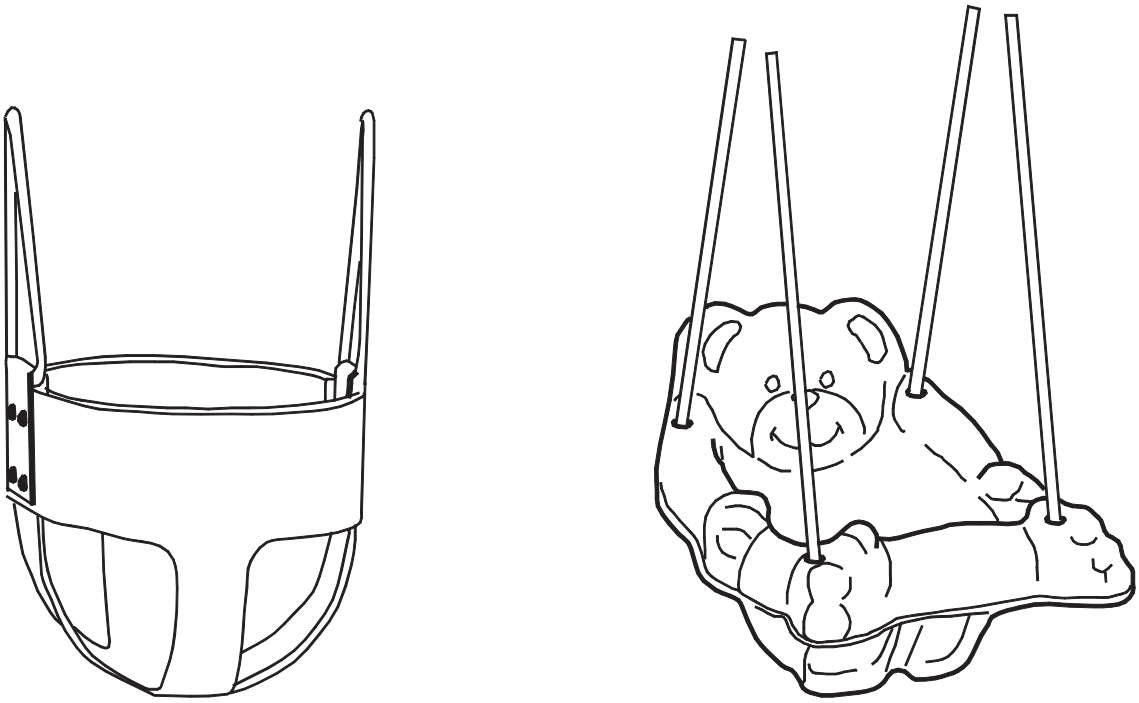

Figure 2 — Examples of fully enclosed toddler swing seat

3.11
impact area
area of a swing element that comes into contact with the test mass during an impact test in accordance with 6.4 (determination of impact from swing elements)

3.12
infant swing
stationary unit with a frame and a powered mechanism enabling an infant to swing in a seated position

Note 1 to entry: An infant swing is intended for use with infants from birth until the child is able to sit upright unassisted.

© ISO 2014 – All rights reserved

Documents
Document Sharing Hub
Full document details: BS ISO 8124-4:2014+A2:2019

3.13
handrail
rail intended to assist the users to balance or steady themselves

3.14
platform
any elevated substantially horizontal surface intended to be used by a child as a place for play or as a transition between components

Note 1 to entry: Slide starting sections less than 129 000 mm^2 are not considered platforms.

3.15
slide
structure with inclined surface(s) on which the user slides in a defined track See Figure 3.

Note 1 to entry: Note1 to entry: Inclined planes, designed primarily for other purposes, such as roofs and ramps, do not constitute slides.

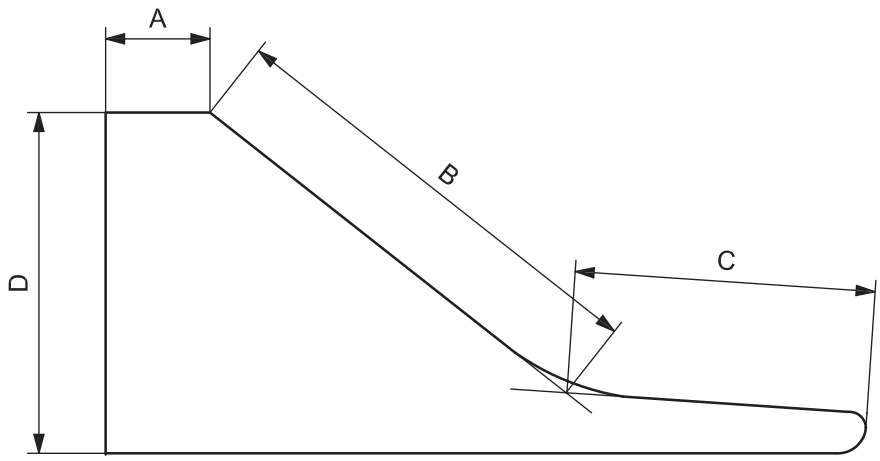

Key

A	starting section
B	sliding section
C	run-out section
D	height of slide
B+	C slide length

NOTE The dimensions A, B, and C are measured at the centreline of the sliding surface. Each of these sizes represents one of the zones of the sliding surface. Each zone of the sliding surface is determined by the intersection of the curve of the sliding surface (taken at the bottom of the sliding surface) and the bisecting line of the angle formed between the zones of the sliding surfaces.

Figure 3 — Diagrammatic representation of a slide

3.16
suspension connector
device that forms the direct contact between a crossbeam and the swing device See Figure 4.

3.17
swing

© ISO 2014 – All rights reserved
Documents
Document Sharing Hub
Full document details: BS ISO 8124-4:2014+A2:2019

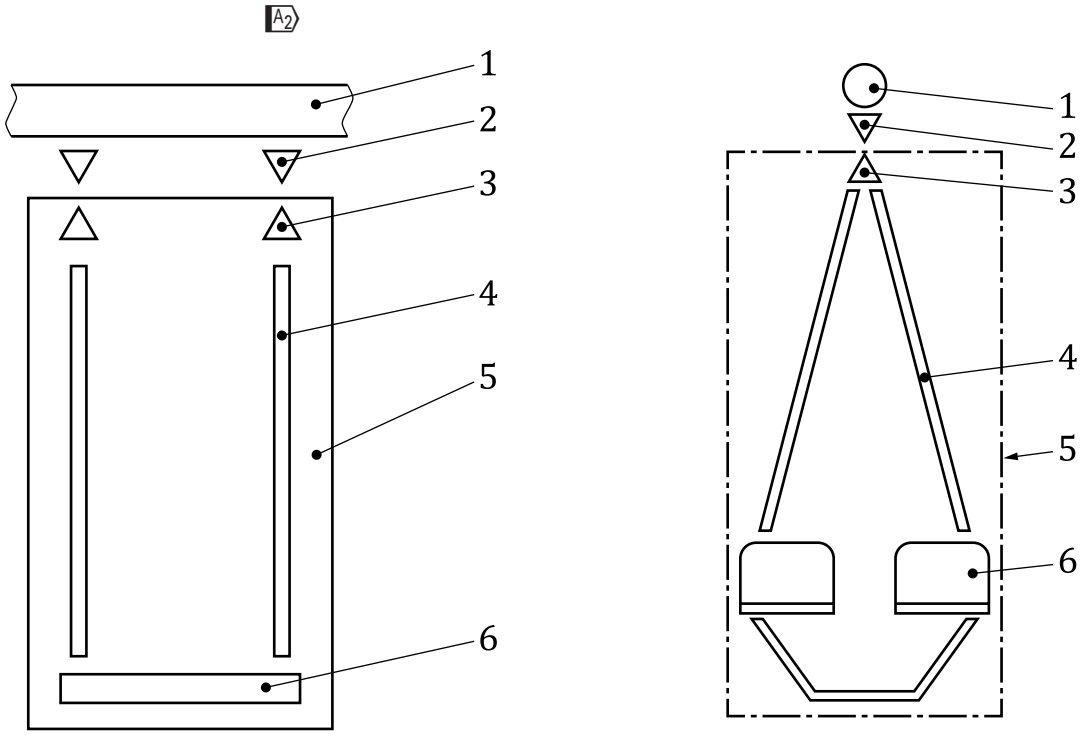

a) Example of a flat seat **b) Example of a gondola**

Key

1 crossbeam/support member
2 suspension connector
3 suspension coupling
4 means of suspension
5 swing device
6 swing element (e.g. seat, rings, bar, gondola)

NOTE A swing device can include one or more footrests. Footrests are considered as parts of the swing elements

Figure 4 — Diagrammatic representation of examples of swings

A2

3.18
inflatable activity toy
activity toy, with a structure made of flexible material, inflated by air, intended for children to play on or in

EXAMPLE Bouncy castle, inflatable slides (see Figure 5).

Note 1 to entry: There are two types of inflatable activity toys: one is kept inflated by a closure (valve) once inflated; the other is kept inflated only by the continuous input of air from a blower.

© ISO 2014 – All rights reserved

Documents
Document Sharing Hub
Full document details: BS ISO 8124-4:2014+A2:2019

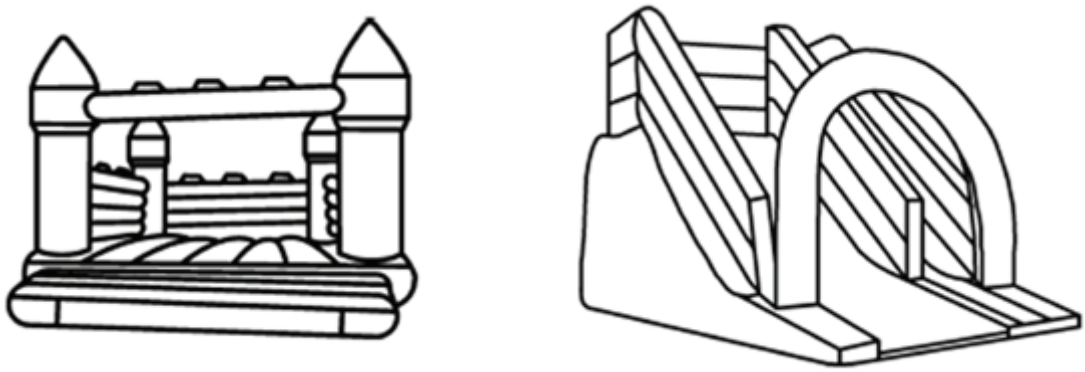

Figure 5 — Examples of inflatable activity toys

3.19
paddling pool
toy pool with a maximum depth of water of 400 mm measured between the overflow level and the deepest point within the pool

Note 1 to entry: A permanently installed pool would not be considered to be a toy.

Note 2 to entry: Examples of typical paddling pools can be found in the guidance document on the application of the European directive on the safety of toys (2009/48/EC), (http://ec.europa.eu/enterprise/sectors/toys/files/gd_doc8pools_en.pdf).

4 Requirements

4.1 General

See A.4.1.

4.1.1 Static strength

Activity toys, other than swings, shall not collapse when tested in accordance with 6.2.1 (strength of toys other than swings). After testing, the toy shall continue to comply with the relevant requirements of this part of ISO 8124. Requirements for swings are given in 4.7 (swings).

4.1.2 Maximum height

See A.4.1.2.

There shall be no part of the activity toy designed to encourage the child to climb, sit on or stand on, with a height of 2 500 mm or more when measured from the ground.

This does not include barriers, roofs, etc., that are not intended to be climbed, sat on or stood on.

Barriers, roofs, etc., that are not intended to be climbed shall be designed in such a way that climbing is not encouraged.

4.1.3 Corners and edges

See A.4.1.3.

Exposed corners and edges shall be rounded.

© ISO 2014 – All rights reserved
Documents
Document Sharing Hub
Full document details: BS ISO 8124-4:2014+A2:2019

Corners and exposed edges on moving parts shall have a minimum radius of 3 mm. This does not apply to swing elements with a mass of 1 000 g or less, the corners and edges of which shall be rounded.

4.1.4 Protruding parts

4.1.4.1 General

Protruding parts (such as bolt ends and nuts) shall be recessed or be protected in such a way that they do not constitute an entrapment hazard or other hazard to users.

If protrusions cannot be placed within the 50 mm outside diameter test gauge defined in 6.7.1 (all protrusions), they are considered to be inaccessible and are exempted from these requirements (see Figure 6).

Rope protrusions are specifically exempted from the requirements of 4.1.4.

Dimensions in millimetres

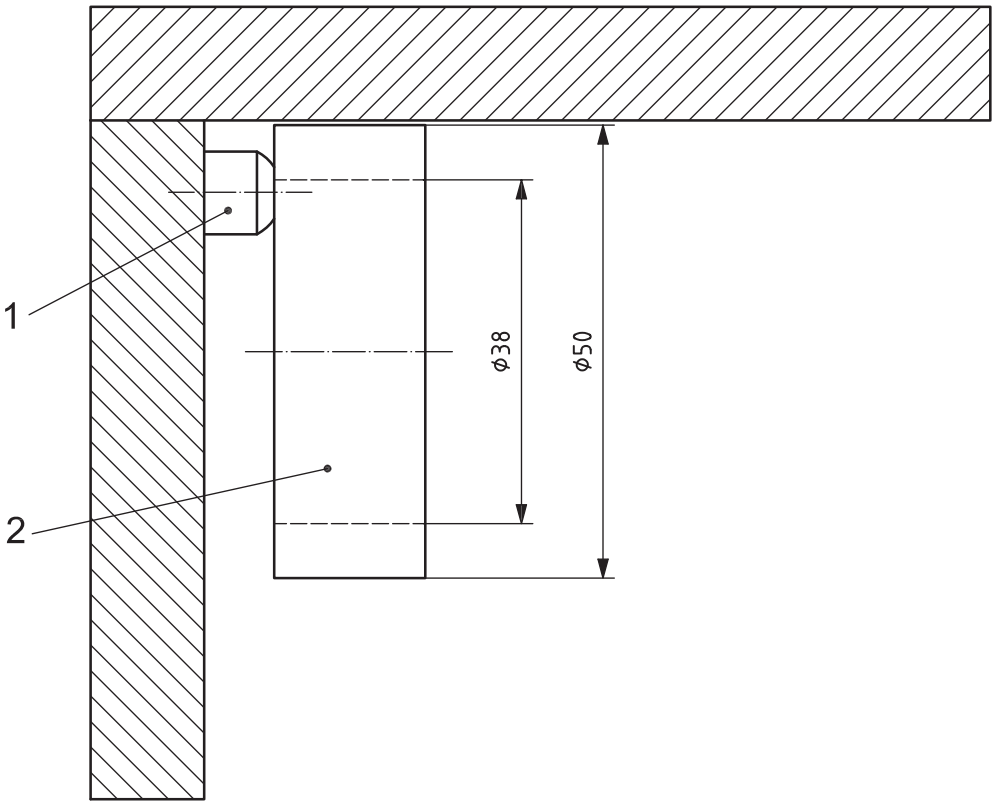

Key

1 inaccessible protrusion (excluded)

2 test gauge (50 mm diameter)

Figure 6 — Example of excluded protrusion

4.1.4.2 All protrusions

No protrusion shall extend beyond the full depth of the test gauges when tested in accordance with 6.7.1.

No protrusion shall terminate in a dimension greater than that of the base dimension (see Figure 7). In the case of hardware, the base dimension shall be defined as the major dimension of the attachment nut or bolt head.

© ISO 2014 – All rights reserved

Documents
Document Sharing Hub
Full document details: BS ISO 8124-4:2014+A2:2019

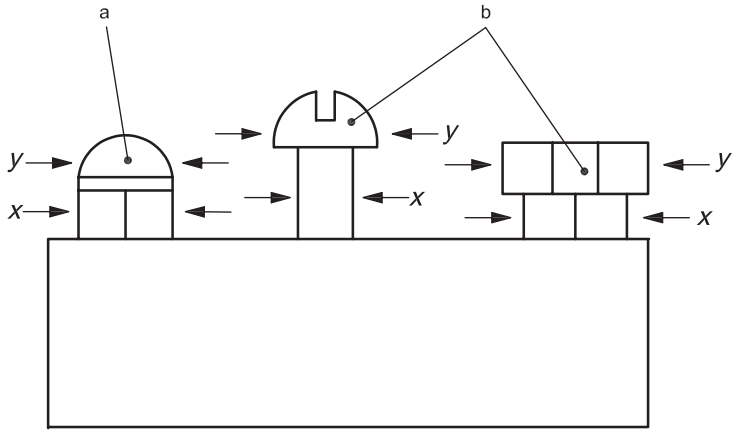

Key

a Pass ($y \leq x$).

b Fail ($y > x$).

Figure 7 — Examples of protrusion configurations

4.1.4.3 Upright protrusions

Protrusions that fit within any of the gauges defined in 6.7.1 and that project upwards from a horizontal plane shall have no projection perpendicular or at an acute angle to the plane of the initial surface extending more than 3 mm in height (see Figure 8).

For example, the hemispherical ends of bolts are exempt from this requirement because they do not project perpendicular to the plane of the initial surface.

Dimensions in millimetres

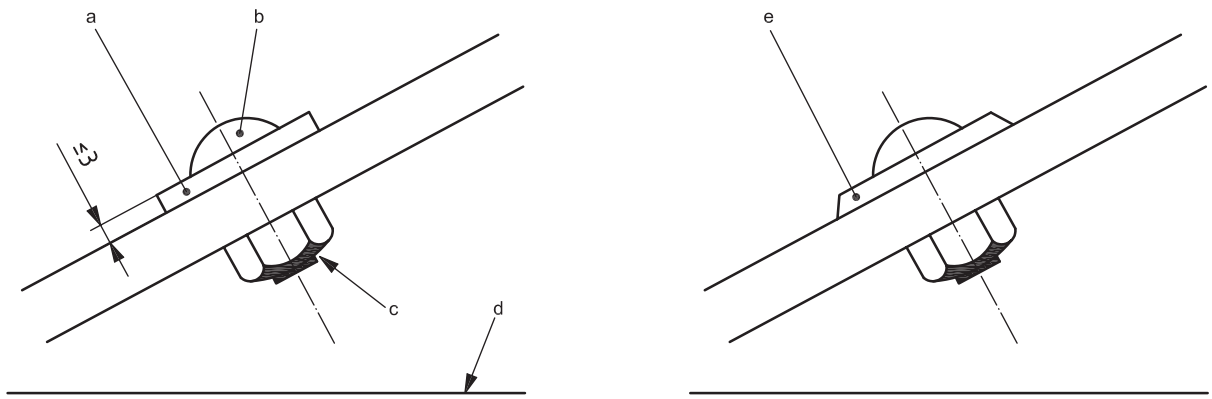

Key

a Protrusions that project perpendicular or at an acute angle to the plane of the initial surface with the axis inclined upward from the horizontal plane shall comply with the 3 mm maximum requirement.

b Hemispherical end exempted from the 3 mm maximum requirement.

c Protrusions with axis horizontal or below horizontal shall not extend beyond the face of the test gauges defined in 6.7.1.

d Horizontal plane.

e Protrusions that project at an obtuse angle to the plane of the initial surface are exempt from the 3 mm maximum requirement.

Figure 8 — Upright protrusion test

© ISO 2014 – All rights reserved
Documents
Document Sharing Hub
Full document details: BS ISO 8124-4:2014+A2:2019

4.1.4.4 Motion rides

Protrusions on the front and rear surfaces of suspended members of swinging elements and those on the interior surface of slides shall not protrude beyond the full depth of the test gauge when tested in accordance with 6.7.2 (protrusions in motion rides).

4.1.4.5 Slides

Slides, including protective barriers and their means of attachment, and transition areas pose a greater risk of entrapment than other areas of play equipment. Therefore, the following requirements apply to slides and sliding devices.

Any accessible protrusion that allows the 77 mm test gauge defined in 6.7.1.2 to pass over it shall have no projection perpendicular or at an acute angle to the plane of the initial surface extending more than 3 mm. The areas subject to this requirement are outlined in Figure 9. The outside surface of tunnel slides that are completely enclosed are exempt from this requirement.

© ISO 2014 – All rights reserved

Documents
Document Sharing Hub
Full document details: BS ISO 8124-4:2014+A2:2019

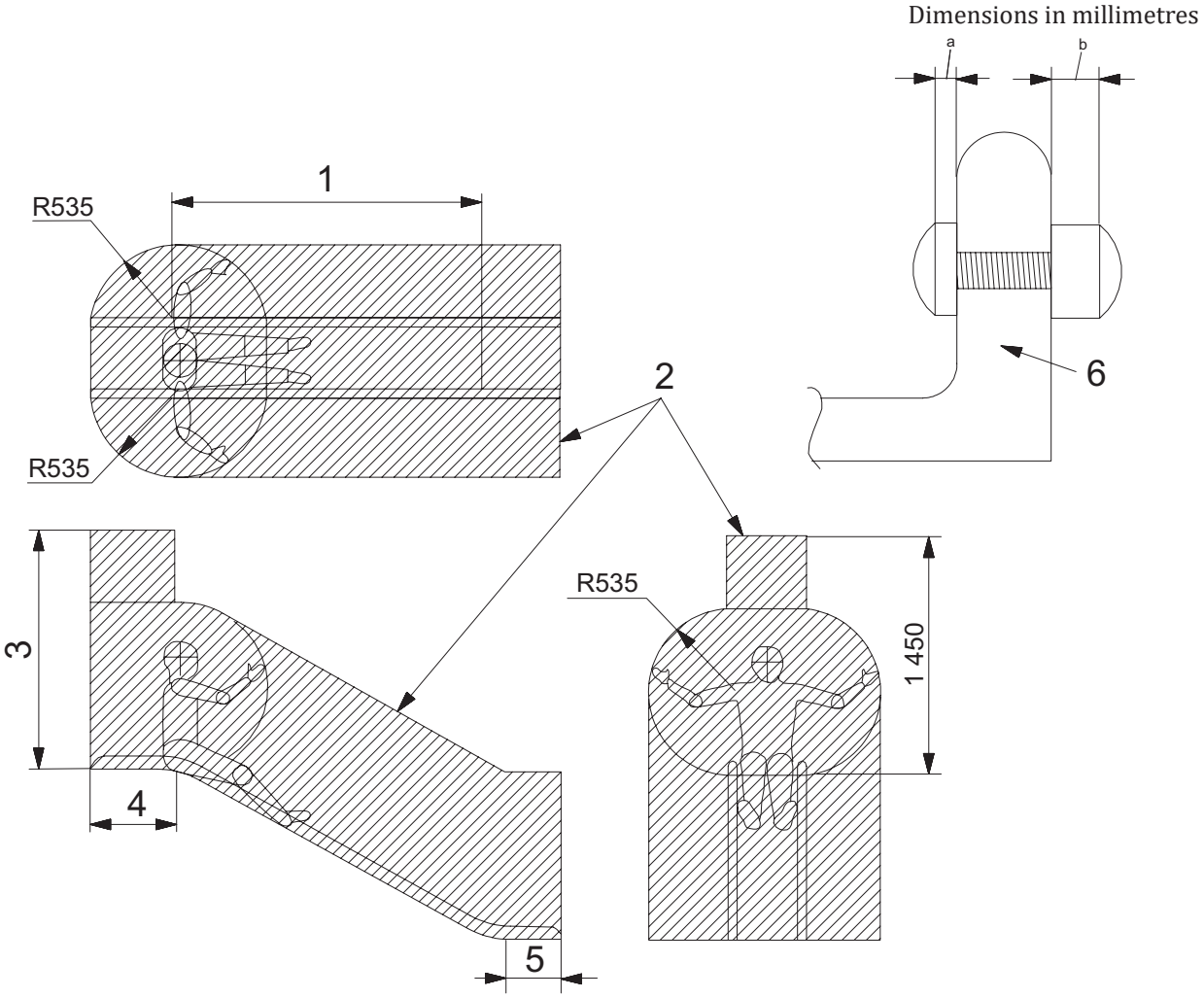

Key

1	sliding surface	4	starting section
2	shaded areas representing non-entrapment/ protrusion zone	5	run-out section
3	standing height	6	slide side rail
a	Pass (3 mm or less).		
b	Fail (more than 3 mm).		

Figure 9 — Non-entrapment/protrusion zone and protrusion examples

Slides shall be constructed in such a way as to provide a smooth continuous sliding surface with no gaps or spaces that might create an entrapment hazard such as, but not limited to, the space created between sidewalls when two single slides are combined to create a doubly wide slide, or the point where a hood is attached to the sidewalls of a slide. Roller slides are exempt from the requirements of this subclause. See 4.6.4 (roller slides) for specific requirements for roller slides.

4.1.5 Climbing and swinging ropes, chains and cables

See A.4.1.5.

A suspended climbing rope, chain or cable shall be secured at both ends to prevent the rope, chain or cable from being looped back on itself creating a loop with an interior perimeter of 130 mm (diameter 41,4 mm) or more.

© ISO 2014 – All rights reserved
Documents
Document Sharing Hub
Full document details: BS ISO 8124-4:2014+A2:2019

A rope, chain or cable used to support a swing seat is exempt from these requirements.

4.1.6 Open tubing

All open tubing ends that are not resting on the ground or otherwise covered shall be provided with caps or plugs that have a smooth finish and are tight-fitting. The protective cap or cover shall not become detached when tested in accordance with the torque test and the tension test for protective components specified in ISO 8124-1.

4.2 Barriers

See A.4.2.

Any platform intended for sitting or standing 760 mm or more above the ground shall be equipped with a barrier on all sides that face outward from the toy.

Openings in barriers to give access to slides, climbing frames and ladders are allowed.

Barriers for platforms from 760 mm to 1 000 mm above the ground shall have a minimum height of 630 mm.

Barriers for platforms greater than 1 000 mm and up to 1 830 mm above the ground shall have a minimum height of 720 mm.

Barriers for platforms more than 1 830 mm above the ground shall have a minimum height of 840 mm.

Barriers for platforms from 760 mm to 1 000 mm above the ground shall have a maximum vertical opening of 610 mm between the lowermost member of the barrier and the platform that it surrounds.

Barriers for platforms more than 1 000 mm above the ground shall be designed to minimize the likelihood of climbing. Openings within these barriers or between the barrier and the platform surface shall not permit the passage of the torso probe defined in 6.5.1 (head and neck entrapment in completely bound openings).

For barriers with an uneven top design, a straightedge of (200 ± 5) mm shall be used for measuring minimum height. Place the straightedge horizontally on top of the barrier. Measure the vertical distance between the platform and the bottom of the straightedge. The distance shall in no place be less than the minimum heights specified in this part of ISO 8124.

NOTE Special requirements apply to slides (see 4.6.2 (retaining sides for slides) and 4.6.3 (starting, sliding and run-out section on slides)).

When tested in accordance with 6.3 (dynamic strength of barriers and handrails), no part of the barrier or handrail shall collapse, such that the toy does not comply with the relevant requirements of this part of ISO 8124.

4.3 Rung ladders, stepladders and stairways

These requirements do not apply to toys with a platform height of 600 mm or less.

Rung ladders, stepladders and stairways shall comply with the following requirements.

a) The rung or tread shall have a substantial horizontal stepping surface with a lateral width of 240 mm or more (see Figure 10).

b) The distance between the upper surface of the rungs or treads on rung ladders or stepladders shall not be more than 310 mm and on stairways not more 230 mm when measured vertically in accordance with Figure 10.

c) The surface of the tread shall not be slippery.

© ISO 2014 – All rights reserved

Documents
Document Sharing Hub
Full document details: BS ISO 8124-4:2014+A2:2019

NOTE This can be achieved by corrugation of the tread or by use of non-slip materials.

d) The diameter or cross-sectional dimension of the rungs on rung ladders shall be at least 16 mm but not more than 45 mm. Care should be taken when using designs other than circular cross-sections to ensure that gripping potential is not seriously impaired.

e) The depth of treads on stepladders with closed risers or stairways shall be 180 mm or more.

f) The inclination of stairways shall not be more than 50°. The inclination of stepladders shall not be less than 65° and not more than 75°. The inclination of rung ladders shall not be less than 60° and not more than 90°.

g) Stairways and stepladders with a height of 1 200 mm or more above the ground shall be provided with a means of continuous hand support from a height of 760 mm (see Figure 10).

Dimensions in millimetres

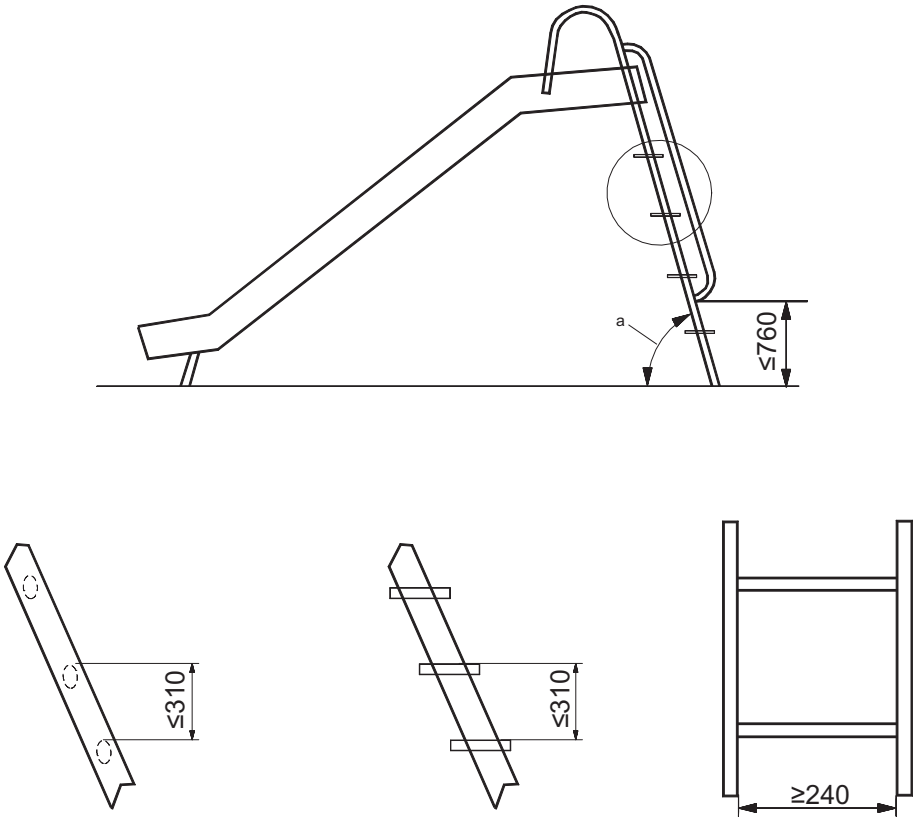

Key

a Angle of inclination:
- for stepladders ≥ 65° and ≤ 75°;
- for rung ladders ≥ 60° and ≤ 90°

Figure 10 — Dimensions of ladders

4.4 Entrapment

See A.4.4.

4.4.1 Head and neck entrapment

These requirements do not apply to openings where the ground forms the lower boundary.

© ISO 2014 – All rights reserved
Documents
Document Sharing Hub
Full document details: BS ISO 8124-4:2014+A2:2019

Activity toys shall be constructed so that no openings create head and neck entrapment hazards either by head first or feet first passage.

NOTE Hazardous situations in which this type of entrapment can be encountered include the following:

— completely bound openings through which a user can slide head first or feet first;

— partially bound or V-shaped openings;

— shearing and moving openings.

When choosing materials, the manufacturer shall take into account the entrapment hazards that can occur due to distortion of material during use.

a) Accessible completely bound openings shall also allow passage of probe D (Figure 26) if they allow passage of probe C (Figure 25) when tested in accordance with 6.5.1 (test for head and neck entrapment).

b) Accessible rigid openings shall not allow the passage of probe E (Figure 27) unless they also allow the passage of probe D when tested in accordance with 6.5.1.

c) Partially bound and V-shaped openings shall be constructed so that either:

   1) the opening is not accessible as illustrated in Figure 29 and when tested in accordance with 6.5.2.3 a); or

   2) the tip of the template contacts the base of the opening when tested in accordance with 6.5.2.3 b);

d) Openings between flexible parts of suspended bridges and any rigid side members shall allow the passage of probe D (Figure 26) under the worst-case condition of loading. Both loaded and unloaded situations shall be tested.

e) Non-rigid members (e.g. ropes) shall not overlap if by doing so they create openings that do not comply with the requirements in a).

f) A shield intended to make inaccessible any opening that would otherwise fail the requirements of a) to e) shall

   1) be constructed of a rigid material;

   2) not fracture, fail or be displaced in a manner that will allow the opening to become accessible when impacted by a 127 mm diameter steel ball with 27 J at a point within 25 mm of the geometric centre of the shield;

   3) not fracture, fail or be displaced in a manner that will allow the opening to become accessible when tested in accordance with the torque and tension tests of ISO 8124-1.

4.4.2 Entrapment of clothing and hair

Hazardous situations in which clothing or hair can be entrapped may be created by:

a) gaps or V-shaped openings in which parts of clothing can become entrapped while or immediately before the user undergoes a forced movement;

b) protrusions;

c) rotating parts.

© ISO 2014 – All rights reserved

Documents
Document Sharing Hub
Full document details: BS ISO 8124-4:2014+A2:2019

Slides, fireman's poles and roofs shall be constructed in such a way that the toggle or chain is not entrapped when tested in accordance with 6.6 (toggle test).

NOTE 1 When using elements of circular cross-section, special consideration should be given to avoid clothing and hair entrapment. This can be achieved by using spacers or similar devices.

Slides, fireman's poles and roofs shall be constructed so that openings located within the free space do not entrap the toggle or chain when tested in accordance with 6.6.

Rotating parts (e.g. spindles) shall have means of preventing entanglement of clothing or hair.

NOTE 2 Suitable covering or shields can be used to prevent entanglement of clothing or hair in rotating parts.

4.4.3 Entrapment of feet

Surfaces intended for standing, running or walking shall not contain any gaps likely to cause foot or leg entrapment. There shall be no gaps greater than 30 mm measured in one direction (see Figure 11), unless suitable means of balance is provided.

Dimensions in millimetres

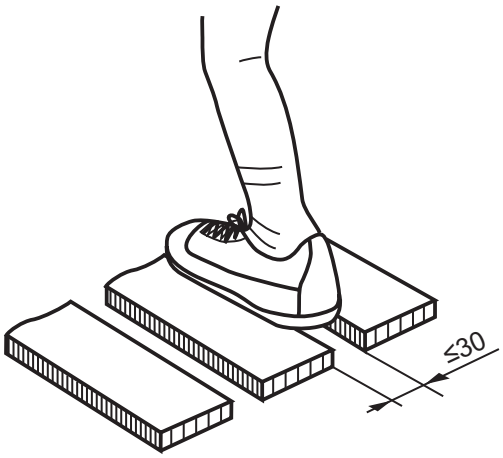

Figure 11 — Measurement of surface gap on running and walking levels

4.4.4 Entrapment of fingers

Activity toys shall be constructed in such a way that holes, slots and gaps do not cause an entrapment hazard to fingers.

Accessible holes, slots and gaps in or between any rigid materials (excluding chains), where the body is in a forced movement, shall also admit a 12 mm diameter rod if they can admit a 5 mm diameter rod to a depth of 10 mm or more.

The requirements in this subclause do not apply to weather-induced dry cracks in solid wood.

4.5 Stability of activity toys other than slides, swings and toys with crossbeams

4.5.1 General

NOTE Stability requirements for slides are given in 4.6.1 (stability of slides) and for swings and other activity toys with crossbeams in 4.7.1 (stability of swings and other activity toys with crossbeams).

Activity toys supplied with anchors intended to be permanently fixed (e.g. in concrete) when used in accordance with the manufacturer's instructions shall not be subjected to stability tests.

© ISO 2014 – All rights reserved
Documents
Document Sharing Hub
Full document details: BS ISO 8124-4:2014+A2:2019

Activity toys supplied with removable ground anchors shall be tested with anchors fixed in accordance with the manufacturer's instructions.

Activity toys not supplied with anchors shall be subjected to stability tests.

4.5.2 Stability of activity toys with a free height of fall of 600 mm or less

Activity toys with a free height of fall of 600 mm or less shall not tip over when tested in accordance with 6.1.1 (stability of activity toys with a free height of fall of 600 mm or less).

4.5.3 Stability of activity toys with a free height of fall of more than 600 mm

Activity toys with a free height of fall of more than 600 mm shall not tip over when tested in accordance with 6.1.2 (stability of activity toys with a free height of fall of more than 600 mm).

4.6 Slides

See A.4.6.

4.6.1 Stability of slides

Slides supplied with anchors intended to be permanently fixed (e.g. in concrete) when in use in accordance with the manufacturer's instructions shall not be subjected to stability tests.

Slides supplied with removable ground anchors shall be tested with anchors fixed in accordance with the manufacturer's instructions.

Slides not supplied with anchors shall be subjected to stability tests.

Slides shall not tip over when tested in accordance with 6.1.3 (stability of slides).

4.6.2 Retaining sides for slides

Retaining sides for slides shall comply with the following requirements (see Figure 12).

a) For slides with a height of more than 1 000 mm above the ground, the height, *h*, of the retaining sides shall be 100 mm or more.

b) For slides with a height of 1 000 mm or less above the ground, the height, *h*, of the retaining sides shall be 50 mm or more.

Retaining sides are not required for the run-out section.

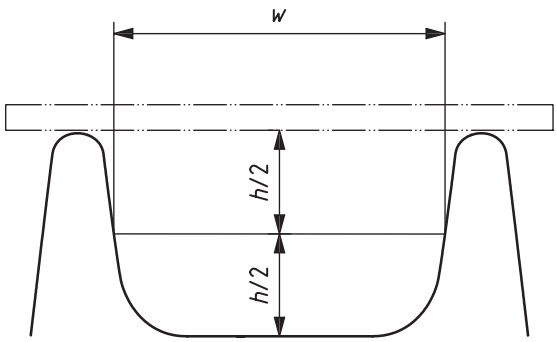

Key

h height of the retaining sides

w width of the slide

Figure 12 — Height of retaining sides

© ISO 2014 – All rights reserved

Documents
Document Sharing Hub
Full document details: BS ISO 8124-4:2014+A2:2019