BS ISO 8178-9:2019

BSI Standards Publication

Reciprocating internal combustion engines — Exhaust emission measurement

Part 9: Test cycles and test procedures for measurement of exhaust gas smoke emissions from compression ignition engines using an opacimeter

Documents
Document Sharing Hub

Full document details: BS ISO 8178-9:2019

National foreword

This British Standard is the UK implementation of ISO 8178-9:2019. It supersedes BS ISO 8178-10:2002 and BS ISO 8178-9:2012, which are withdrawn.

The UK participation in its preparation was entrusted to Technical Committee MCE/14/-/3, RIC Engines - Performance and emissions.

A list of organizations represented on this committee can be obtained on request to its secretary.

This publication does not purport to include all the necessary provisions of a contract. Users are responsible for its correct application.

© The British Standards Institution 2019
Published by BSI Standards Limited 2019

ISBN 978 0 539 00814 2

ICS 13.040.50; 27.020

Compliance with a British Standard cannot confer immunity from legal obligations.

This British Standard was published under the authority of the Standards Policy and Strategy Committee on 31 July 2019.

Amendments/corrigenda issued since publication

Date	Text affected

Documents
Document Sharing Hub

Full document details: BS ISO 8178-9:2019

INTERNATIONAL STANDARD

ISO 8178-9

Third edition
2019-07

Reciprocating internal combustion engines — Exhaust emission measurement —

Part 9: Test cycles and test procedures for measurement of exhaust gas smoke emissions from compression ignition engines using an opacimeter

Moteurs alternatifs à combustion interne — Mesurage des émissions de gaz d'échappement —

Partie 9: Cycles et procédures d'essai pour le mesurage au banc d'essai des émissions de fumées de gaz d'échappement des moteurs alternatifs à combustion interne à allumage par compression fonctionnant en régime transitoire

Reference number
ISO 8178-9:2019(E)

Documents
Document Sharing Hub

© ISO 2019

Full document details: BS ISO 8178-9:2019

COPYRIGHT PROTECTED DOCUMENT

© ISO 2019

All rights reserved. Unless otherwise specified, or required in the context of its implementation, no part of this publication may be reproduced or utilized otherwise in any form or by any means, electronic or mechanical, including photocopying, or posting on the internet or an intranet, without prior written permission. Permission can be requested from either ISO at the address below or ISO's member body in the country of the requester.

ISO copyright office
CP 401 • Ch. de Blandonnet 8
CH-1214 Vernier, Geneva
Phone: +41 22 749 01 11
Fax: +41 22 749 09 47
Email: copyright@iso.org
Website: www.iso.org

Published in Switzerland

© ISO 2019 – All rights reserved

Documents
Document Sharing Hub

Full document details: BS ISO 8178-9:2019

Contents

Page

Foreword ..... **v**
Introduction ..... **vi**
1 Scope **1**
2 Normative references **1**
3 Terms and definitions **2**
4 Symbols and abbreviated terms **4**
4.1 Symbols 4
4.2 Abbreviated terms 5
5 Test conditions **5**
6 Test fuels **6**
7 Measurement equipment and accuracy **6**
7.1 General 6
7.2 Engine and ambient related testing equipment 6
7.3 Opacimeters 6
7.3.1 General 6
7.3.2 Types of opacimeters 7
7.3.3 Performance Specifications 7
7.3.4 Calibration of the opacimeter 7
8 Test run execution **8**
8.1 Installation of the measuring equipment 8
8.1.1 General 8
8.1.2 Exhaust pipe 8
8.1.3 Rain caps 8
8.1.4 Field testing 9
8.2 Checking of the opacimeter 9
8.3 Test cycle 10
9 Data evaluation and calculation **10**
9.1 Data evaluation 10
9.1.1 General requirements — Opacimeters 10
9.1.2 Beer-Lambert relationships 10
9.1.3 Data conversion 11
9.1.4 Effective optical path length input values 11
9.2 Signal filter algorithm 12
9.2.1 General 12
9.2.2 Calculation of filter rise time and Bessel constants 12
9.2.3 Calculation of Bessel filtered smoke 13
9.3 Alternative signal handling 14
9.3.1 General 14
9.3.2 Alternative specifications 14
10 Opacimeter Design Specifications **14**
10.1 General 14
10.2 Full-flow opacimeter 15
10.2.1 General 15
10.2.2 Components of a full-flow opacimeter 15
10.3 Determination of effective optical path length (L_A) 16
10.3.1 General 16
10.3.2 External versus internal tailpipe dimensions 16
10.4 Partial-flow-opacimeter 19
10.4.1 General 19
10.4.2 Components of partial-flow opacimeter 20

AVA Documents
Document Sharing Hub

© ISO 2019 – All rights reserved

Full document details: BS ISO 8178-9:2019

Annex A (informative) **Overview particulate and soot measurement methods** 23
Annex B (informative) **Example of calculation procedure** 25
Annex C (informative) **Remarks on test cycles** 37
Annex D (normative) **Test cycle for variable-speed non-road engines** 39
Annex E (normative) **Test cycle for constant-speed non-road engines** 46
Annex F (normative) **Test cycle for marine propulsion engines** 50
Annex G (normative) **Test cycle for variable speed engines type F (rail traction)** 56
Annex H (informative) **Test at steady speeds over full-load curve** 60
Annex I (normative) **Reporting smoke test results** 62
Bibliography 65

© ISO 2019 – All rights reserved
Documents
Document Sharing Hub
Full document details: BS ISO 8178-9:2019

Foreword

ISO (the International Organization for Standardization) is a worldwide federation of national standards bodies (ISO member bodies). The work of preparing International Standards is normally carried out through ISO technical committees. Each member body interested in a subject for which a technical committee has been established has the right to be represented on that committee. International organizations, governmental and non-governmental, in liaison with ISO, also take part in the work. ISO collaborates closely with the International Electrotechnical Commission (IEC) on all matters of electrotechnical standardization.

The procedures used to develop this document and those intended for its further maintenance are described in the ISO/IEC Directives, Part 1. In particular the different approval criteria needed for the different types of ISO documents should be noted. This document was drafted in accordance with the editorial rules of the ISO/IEC Directives, Part 2 (see www.iso.org/directives).

Attention is drawn to the possibility that some of the elements of this document may be the subject of patent rights. ISO shall not be held responsible for identifying any or all such patent rights. Details of any patent rights identified during the development of the document will be in the Introduction and/or on the ISO list of patent declarations received (see www.iso.org/patents).

Any trade name used in this document is information given for the convenience of users and does not constitute an endorsement.

For an explanation of the voluntary nature of standards, the meaning of ISO specific terms and expressions related to conformity assessment, as well as information about ISO's adherence to the World Trade Organization (WTO) principles in the Technical Barriers to Trade (TBT), see www.iso.org/iso/foreword.html.

This document was prepared by Technical Committee ISO/TC 70, *Internal combustion engines*, Subcommittee SC 8, *Exhaust gas emission measurement*.

This third edition cancels and replaces ISO 8178-9:2012 and ISO 8178-10:2002, which have been technically revised.

The main changes compared to the previous editions are as follows:

— ISO 8178-10:2002 has been incorporated in this document;

— terms and definitions have been harmonized within the ISO 8178 series and differences to other ISO standards have been described where applicable;

— redundant specifications of testing equipment, calibration and verification requirements have been deleted or replaced by references to other parts of the ISO 8178 series;

— ambient density smoke correction has been deleted;

— order of annexes has been changed;

— Annex A has been added - Overview particulate and soot measurement methods;

— Annex H has been added - Test at steady speeds over full-load curve;

— Annex I has been added - Reporting smoke tests results.

A list of all parts in the ISO 8178 series can be found on the ISO website.

Any feedback or questions on this document should be directed to the user's national standards body. A complete listing of these bodies can be found at www.iso.org/members.html.

© ISO 2019 – All rights reserved

Documents
Document Sharing Hub
Full document details: BS ISO 8178-9:2019

Introduction

On a global scale, there are currently many smoke measurement procedures in various forms. Some of these smoke measurement procedures are designed for test bed testing and intended to be used for certification or type-approval purposes. Others are designed for field-testing and can be used in inspection and maintenance programs. Different smoke measurement methods exist to meet the needs of various regulatory agencies and industries.

The two smoke measurement methods typically used are (1) the FSN method, measuring light absorption based on the change in optical reflectance of visible light from a blackening filter paper relative to the clean filter (filter-type smoke meters) and (2) the exhaust gas opacity method, measuring transmittance based on light extinction caused by absorption and scattering of light (opacimeter-type smoke meters).

Figure A.1 in Annex A shows an overview of the measurement methods specified by an ISO standard including FSN and opacity respectively.

ISO 8178-4 specifies a number of different test cycles to be used to characterize and control gaseous and particulate emissions from nonroad engines using a variety of steady-state and transient operating conditions. The test cycles in ISO 8178-4 were developed in recognition of the differing operating characteristics of various categories of nonroad machines. Likewise, different smoke test cycles can be appropriate for different categories of nonroad engines and machines.

© ISO 2019 – All rights reserved
Documents
Document Sharing Hub
Full document details: BS ISO 8178-9:2019

Reciprocating internal combustion engines — Exhaust emission measurement —

Part 9: Test cycles and test procedures for measurement of exhaust gas smoke emissions from compression ignition engines using an opacimeter

1 Scope

This document specifies the measurement procedures and test cycles for the evaluation of smoke emissions from compression ignition engines using an opacimeter. The tests are carried out under steady-state and transient operation using tests cycles which are representative of a given application.

The smoke testing is conducted using opacimeter-type smoke meters which operate on the light extinction principle. The purpose of this document is to define the smoke test cycles and the methods used to measure the opacity and for the determination of the light absorption coefficient. It allows the use of either full-flow or partial-flow opacimeters and corrects for differences in rise time between the two types of opacimeters. Specifications of the apparatus for the measurement of opacity can be found in ISO 11614. The test procedures and measurement techniques described in this document are applicable to reciprocating internal combustion (RIC) engines in general. Annex D, Annex E, Annex F and Annex G each contains a test cycle that is relevant only for those specific applications listed in the first subclause of that annex. Where possible, the smoke test cycle described in the annex utilizes the engine and machine categories developed in ISO 8178-4.

For certain categories of non-road engines "at site" rather than "test bed" smoke test procedures can prove to be necessary. For engines used in machinery covered by additional requirements (e.g. occupational health and safety regulations), additional test conditions and special evaluation methods can apply.

2 Normative references

The following documents are referred to in the text in such a way that some or all of their content constitutes requirements of this document. For dated references, only the edition cited applies. For undated references, the latest edition of the referenced document (including any amendments) applies.

ISO 8178-1:—[1], *Reciprocating internal combustion engines — Exhaust emission measurement — Part 1: Test-bed measurement systems of gaseous and particulate emissions*

ISO 8178-2, *Reciprocating internal combustion engines — Exhaust emission measurement — Part 2: Measurement of gaseous and particulate exhaust emissions under field conditions*

ISO 8178-4:—[2], *Reciprocating internal combustion engines — Exhaust emission measurement — Part 4: Steady-state and transient test cycles for different engine applications*

ISO 8178-7, *Reciprocating internal combustion engines — Exhaust emission measurement — Part 7: Engine family determination*

1) Under preparation.

2) Under preparation.

© ISO 2019 – All rights reserved

Documents
Document Sharing Hub
Full document details: BS ISO 8178-9:2019

ISO 8178-8, *Reciprocating internal combustion engines — Exhaust emission measurement — Part 8: Engine group determination*

ISO 8528-1, *Reciprocating internal combustion engine driven alternating current generating sets — Part 1: Application, ratings and performance*

ISO 11614:1999, *Reciprocating internal combustion compression-ignition engines — Apparatus for measurement of the opacity and for determination of the light absorption coefficient of exhaust gas*

3 Terms and definitions

For the purposes of this document, the following terms and definitions apply.

ISO and IEC maintain terminological databases for use in standardization at the following addresses:

— ISO Online browsing platform: available at https://www.iso.org/obp/

— IEC Electropedia: available at http://www.electropedia.org/

3.1
exhaust gas smoke
visible suspension of solid and/or liquid particles in gases resulting from combustion or pyrolysis

Note 1 to entry: The exhaust gas smoke may be black smoke, blue smoke, brown smoke or white smoke depending on the components present in the exhaust gas after the combustion or pyrolysis process. Black smoke (also referred to as "soot") is mainly due to the presence of carbon particles. Blue smoke is usually due to droplets resulting from the incomplete combustion of fuel or lubricating oil. Brown smoke is due to the presence of NO_2 in the exhaust gas. White smoke is usually due to condensed water and/or liquid fuel.

3.2
transmittance
τ
fraction of light transmitted from a source through a smoke-obscured path which reaches the observer or the instrument receiver

Note 1 to entry: Transmittance is expressed as a percentage.

3.3
opacity
N
fraction of light transmitted from a source through a smoke-obscured path which is prevented from reaching the observer or the instrument receiver

Note 1 to entry: Opacity is expressed as a percentage.

Note 2 to entry: $N = 100 - \tau$.

3.4
effective optical path length
L_A
length of the smoke-obscured optical path between the *opacimeter* (3.8) light source and the receiver

Note 1 to entry: Effective optical path length is expressed in meters and corrected, as necessary, for non-uniformity due to density gradients and fringe effect.

3.5
standard effective optical path length
L_{AS}
measurement used to ensure meaningful comparisons of quoted *opacity* (3.3) values

Note 1 to entry: L_{AS} values are defined in 9.1.4.

© ISO 2019 – All rights reserved
Documents
Document Sharing Hub
Full document details: BS ISO 8178-9:2019

3.6
light absorption coefficient
k
fundamental property quantifying the ability of a smoke plume or smoke-containing gas sample to obscure light

Note 1 to entry: Light absorption coefficient is expressed in reciprocal meters (m^{-1}).

3.7
Beer-Lambert law
mathematical equation describing the physical relationships between the *light absorption coefficient (k)* (3.6), *transmittance (τ)* (3.2) and *effective optical path length (LA)* (3.4)

Note 1 to entry: Because the light absorption coefficient (k) cannot be measured directly, the Beer-Lambert law is used to calculate k, when *opacity (N)* (3.3) or transmittance (τ) and effective optical path length (L_A) are known.

$$k = \frac{-1}{L_A} \times \ln\left(\frac{\tau}{100}\right) \tag{1}$$

$$k = \frac{-1}{L_A} \times \ln\left(1 - \frac{N}{100}\right) \tag{2}$$

3.8
opacimeter
instrument used for continuous measurement of *opacity* (3.3) and *light absorption coefficient* (3.6) of the exhaust gas

3.9
full-flow opacimeter
instrument which measures all flow of exhaust gas passing through the smoke measuring chamber

3.10
full-flow end-of-line opacimeter
instrument which measures the *opacity* (3.3) of the full exhaust plume as it exits at tailpipe

3.11
full-flow in-line opacimeter
instrument which measures the *opacity* (3.3) of the full exhaust plume within the tailpipe

3.12
partial-flow opacimeter
instrument which samples a part of the total exhaust flow and passes the sample through the measuring chamber

3.13
opacimeter rise time
X
overall rise time of the instrument

Note 1 to entry: The definition of the term “opacimeter rise time” used in this document is equal to the definition of the term “opacimeter response time” used in ISO 11614.

3.14
opacimeter physical rise time
t_p
difference between the times when the raw k-signal reaches 10 % and 90 % of the full deviation when the *light absorption coefficient* (3.6) of the gas being measured is changed in less than 0,01 s

Note 1 to entry: The physical rise time of the *partial-flow opacimeter* (3.12) is defined with the sampling probe and transfer tube. Additional information on the physical rise time can be found in ISO 11614.

AVA Documents
Document Sharing Hub

© ISO 2019 – All rights reserved

Full document details: BS ISO 8178-9:2019

Note 2 to entry: The definition of the term “opacimeter physical rise time” used in this document is equal to the definition of the term “opacimeter physical response time” used in ISO 11614.

3.15
opacimeter electrical rise time
t_e
difference between the times when the instrument recorder output signal or display reaches 10 % and 90 % of full scale when the light source is interrupted or completely extinguished in less than 0,01 s

Note 1 to entry: Additional information on the electrical rise time can be found in ISO 11614.

Note 2 to entry: The definition of the term “opacimeter electrical rise time” used in this document is equal to the definition of the term “opacimeter electrical response time” used in ISO 11614.

3.16
filter rise time
t_F
filter rise time of the applied Bessel filter which is required to remove the high frequency distortions of the raw *opacity* (3.3) signal

Note 1 to entry: Additional information can be found in 9.2.

Note 2 to entry: The definition of the term “filter rise time” used in this document is equal to the definition of the term “filter response time” used in ISO 11614.

4 Symbols and abbreviated terms

4.1 Symbols

Symbol	Term	Unit
B	Bessel function constant	1
C	Bessel function constant	1
D	Bessel function constant	1
E	Bessel constant	1
f	Data sampling rate	Hz
f_a	Atmospheric factor	1
f_c	Bessel filter cut-off frequency	s^{-1}
k	Light absorption coefficient	m^{-1}
K	Bessel constant	1
L_A	Effective optical path length	m
L_{AS}	Standard effective optical path length	m
N	Opacity	%
N_A	Opacity at effective optical path length	%
N_{AS}	Opacity at standard effective optical path length	%
p_{me}	Brake mean effective pressure	kPa
p_S	Dry atmospheric pressure	kPa
P	Engine power	kW
S_i	Instantaneous smoke value	m^{-1} or %
t_e	Opacimeter electrical rise time	s
t_F	Filter rise time for Bessel function	s
t_p	Opacimeter physical rise time	s
Δt	Time between successive smoke data	s

© ISO 2019 – All rights reserved
Documents
Document Sharing Hub
Full document details: BS ISO 8178-9:2019

Symbol	Term	Unit
T_a	Engine intake air temperature	°C
X	overall rise time	s
Y_j	Bessel averaged smoke value	m^{-1} or %
ρ	Dry ambient density	kg/m^3
τ	Transmittance	%
Ω	Bessel constant	1

4.2 Abbreviated terms

CL Collimating lens

EC Elemental Carbon

EP Exhaust pipe

FAT Free acceleration time

FM Flow monitoring device

ID Inner diameter

LD Light detector

LS Light source

LSV Lug smoke value

MC Measuring chamber

OD Outer diameter

OPL Optical path length

SPU Sampling pump

PSV Peak smoke value

PSV_a Average of peak smoke values

PSV_F Peak smoke value for free acceleration

SP Sampling probe

SSSV Steady-state smoke value

TS Temperature sensor

TT Transfer tube

5 Test conditions

For laboratory testing, the requirements regarding engine test conditions of ISO 8178-4 shall be applied except ISO 8178-4:—, 5.5.

For in-field testing the requirements for laboratory testing shall be applied with certain restrictions. Such restrictions shall be agreed in advance by the parties involved. It should be noted that emission

© ISO 2019 – All rights reserved

Documents
Document Sharing Hub
Full document details: BS ISO 8178-9:2019

tests carried out under different test conditions do not necessarily comply with the limits specified when using laboratory conditions.

6 Test fuels

Fuel characteristics influence the engine smoke emissions. Therefore, the characteristics of the fuel used for the test shall be determined, recorded and presented with the results of the test.

For laboratory testing, the characteristics of the fuel shall fulfil the requirements given in ISO 8178-4:—, Clause 6.

For in-field testing, the definitions for the acceptance test described in ISO 8178-4:—, Clause 6 shall apply. It should be noted that emission tests carried out using commercial fuel do not necessarily comply with the limits specified when using reference fuels.

7 Measurement equipment and accuracy

7.1 General

The following equipment shall be used for smoke tests on engines. This document refers to the equipment and accuracy requirements necessary for conducting a smoke test.

7.2 Engine and ambient related testing equipment

The following engine and ambient related testing equipment shall comply with the characteristics given in ISO 8178-1:—, Clause 6 and shall meet the calibration and verification requirements given in ISO 8178-1:—, Clause 9:

— dynamometer specifications;

— speed sensors;

— torque sensors;

— pressure transducers;

— temperature sensors;

— dew point sensors.

For in-field testing, where applicable, the requirements of the testing equipment shall be applied as described in ISO 8178-2.

7.3 Opacimeters

7.3.1 General

The smoke tests conforming with this document shall be conducted using opacimeter-type smoke meters. Three different types of opacimeters are allowed: in-line and end-of-line full-flow opacimeters and partial-flow opacimeters. Specifications for the three types of opacimeters can be found in Clause 10 and in ISO 11614:1999, Clauses 6 and 7.

© ISO 2019 – All rights reserved
Documents
Document Sharing Hub
Full document details: BS ISO 8178-9:2019

7.3.2 Types of opacimeters

7.3.2.1 Partial-flow opacimeter

With the partial-flow opacimeter, a part of the exhaust is taken from the exhaust pipe and passed through a transfer line to the measuring chamber. With this type of opacimeter, the effective optical path length is a function of the opacimeter design.

7.3.2.2 Full-flow opacimeters

Two general types of full-flow opacimeters may be used, in-line and end-of-line.

With the in-line opacimeter, the opacity of the full exhaust gas within the exhaust pipe is measured. With this type of opacimeter, the effective optical path length is a function of the opacimeter design.

With the end-of-line opacimeter, the opacity of the full exhaust plume is measured as it exits the exhaust pipe. With this type of opacimeter, the effective optical path length is a function of the exhaust pipe design and the distance between the end of the exhaust pipe and the opacimeter.

7.3.3 Performance Specifications

7.3.3.1 Linearity

The difference between the value measured by the opacimeter and the reference value of the calibrating device shall not exceed ±2 % opacity.

7.3.3.2 Zero drift

Zero drift during a one-hour period shall not exceed ±0,5 % opacity.

7.3.3.3 Opacimeter display and range

For display in both opacity and light absorption coefficient the opacimeter shall have a measuring range appropriate for accurately measuring the smoke of the engine being tested. The resolution shall be at least 0,1 % of full scale.

The optical path length selected for the smoke instrument shall be suitable for the smoke levels being measured in order to minimize errors in calibrations, measurements and calculations.

7.3.3.4 Instrument rise time

The physical rise time of the opacimeter shall not exceed 0,2 s. The electrical rise time of the opacimeter shall not exceed 0,05 s.

7.3.3.5 Neutral density filters

Any neutral density filter used for calibrating and checking opacimeters shall be known to an accuracy of ±1 % opacity and the filter's nominal value shall be checked for accuracy at least yearly using a reference traceable to a national or International Standard.

Neutral density filters are precision devices and can easily be damaged during use. Handling should be minimized and, when required, should be done with care to avoid scratching or soiling of the filter.

7.3.4 Calibration of the opacimeter

7.3.4.1 Calibration procedure

The opacimeter shall be calibrated every 3 months.

© ISO 2019 – All rights reserved

Documents
Document Sharing Hub
Full document details: BS ISO 8178-9:2019

The opacimeter shall be warmed up, stabilized and calibrated in accordance with the manufacturer's recommendations. If the opacimeter is equipped with a purge air system to prevent contamination of the instrument's optics, this system should also be activated and adjusted in accordance with the manufacturer's recommendations.

7.3.4.2 Linearity

With the opacimeter in the opacity readout mode and with no blockage of the opacimeter light beam, the readout shall be adjusted to 0 % ± 0,5 % opacity.

With the opacimeter in the opacity readout mode and all light prevented from reaching the receiver, the readout shall be adjusted to 100 % ± 0,5 % opacity.

The linearity of the opacimeter shall be checked in the opacity mode periodically in accordance with the manufacturer's recommendations. A neutral density filter between 10 % and 60 % opacity which meets the requirements of 7.3.3.5 shall be introduced to the opacimeter and the value recorded. The instrument readout shall not differ by more than ±2 % opacity from the nominal value of the neutral density filter.

8 Test run execution

8.1 Installation of the measuring equipment

8.1.1 General

The opacimeter and sample probes, if applicable, shall be installed after the muffler or any after-treatment device, if fitted, according to the installation procedures specified by the instrument manufacturer.

8.1.2 Exhaust pipe

For full-flow in-line opacimeters the exhaust pipe diameter shall be a straight pipe (free from elbows, bends and sudden change of pipe diameter) of at least 6 pipe diameters upstream and 3 pipe diameters downstream of the instrument location. If the diameter of the measuring zone is greater than the diameter of the exhaust pipe, a pipe gradually convergent before the measuring zone is required. Joints in the connecting pipes between the exhaust pipe and the opacimeter shall not allow air to enter from outside.

For full-flow end-of-line opacimeters the exhaust pipe diameter shall be a straight pipe (free from elbows, bends and sudden change of pipe diameter) of at least 6 pipe diameters upstream of the instrument location.

For partial-flow opacimeters, the exhaust pipe diameter shall be a straight pipe (free from elbows, bends and sudden change of pipe diameter) of at least 6 pipe diameters upstream and 3 pipe diameters downstream of the probe location. In the case of a large exhaust pipe (e.g. of more than about 250 mm diameter), it may be difficult to respect the requirements concerning the length of straight pipe. In such cases an alternative sampling arrangement may be used provided it has been established that the alternative ensures a representative sample.

8.1.3 Rain caps

Smoke measurements cannot be performed using a full-flow end-of-line opacimeter when a tailpipe rain cap is operational. If present, rain caps shall be removed or secured in the fully open position prior to smoke testing. If the opacimeter is installed without removing the rain cap, the meter shall be oriented so that the cap does not interfere with the smoke plume or block any portion of the opacimeter light beam (see Figure 1).

© ISO 2019 – All rights reserved
Documents
Document Sharing Hub
Full document details: BS ISO 8178-9:2019

Dimension in metres

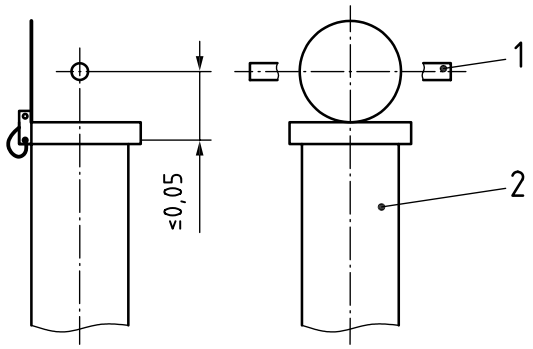

Key

1 full-flow opacimeter

2 tailpipe with raincap secured in fully open position; opacimeter oriented so that the light beam is not interrupted by open rain cap

Figure 1 — Rain cap

8.1.4 Field testing

Some machines have horizontal exhaust systems affixed to the underside of the chassis. Typically these exhaust systems have a curved tailpipe which directs the exhaust flow down against the surface of the earth.

Care should be exercised when using a full-flow end-of-line opacimeter with machines having this type of exhaust system. In some cases, exhaust gases can “rebound” off the earth and recirculate through the opacimeter light beam causing erroneously high smoke measurements. This condition can be aggravated if dust becomes entrained in the recirculating exhaust flow.

In most cases, little can be done to prevent this condition, however, it is recommended that testing personnel attempt to observe whether recirculation is occurring when testing machines with downward directed exhaust systems. If recirculation appears to be influencing the smoke measurement, the test results shall be considered unreliable (too high) and should be used with caution.

Some exhaust systems in the field are designed such that ambient air can enter the exhaust pipe and mix with the exhaust stream. Smoke measurement shall be made before this mixing occurs if field results are to be compared to the results of test bed measurements.

Accessibility to the exhaust system may be limited in some machines, and it may not be possible to install the instrumentation for field measurements in accordance with these recommendations. In these instances, smoke results may not be comparable to the test bed measurement results.

Excessively windy conditions shall be avoided when measuring in the field. Winds are considered excessive if they disturb the size, shape or location of the smoke plume in the region where the exhaust samples are drawn or where the smoke plume is measured. The effect of wind may be eliminated or reduced by locating the machine in a wind-sheltered area or by using measuring equipment designs which preclude wind effects on the smoke in the measuring or sampling zones.

No visible humidity (rain, fog or snow) shall be present in the region where exhaust samples are drawn or the smoke plume is measured. Care shall be taken to ensure that direct sunlight is not hitting the smoke plume or the receiver. Some equipment designs preclude the effects of these conditions.

8.2 Checking of the opacimeter

Prior to any zero and full-scale checks, the opacimeter shall be warmed up and stabilized in accordance with the instrument manufacturer’s recommendations. If the opacimeter is equipped with a purge

© ISO 2019 – All rights reserved

AVA Documents Document Sharing Hub
Full document details: BS ISO 8178-9:2019

air system to prevent contamination of the optics, this system shall also be activated and adjusted in accordance with the manufacturer's recommendations.

The zero and full-scale checks shall be made in the opacity readout mode, since the opacity scale offers two truly definable calibration points, namely 0 % opacity and 100 % opacity.

For test bed measurements with no blockage of the opacimeter light beam, the readout shall be adjusted to 0 % ± 0,5 % opacity. With the light being prevented from reaching the receiver, the readout shall be adjusted to 100 % ± 0,5 % opacity.

For field testing with no blockage of the opacimeter light beam, the readout shall be adjusted to 0 % ± 1 % opacity. With the light being prevented from reaching the receiver, the readout shall be adjusted to 100 % ± 1 % opacity.

Before testing, the instrument shall be returned to the *k* readout mode.

8.3 Test cycle

The engine shall be run on the applicable test cycle as described in Annex D, Annex E, Annex F and Annex G. Annex C provides further considerations to be taken into account.

9 Data evaluation and calculation

9.1 Data evaluation

9.1.1 General requirements — Opacimeters

The measured raw signal shall be converted into the respective smoke units and corrected for opacimeter optical path length differences, as necessary (see 9.1.2, 9.1.3 and 9.1.4). The smoke values shall be recorded using a minimum frequency of 20 Hz and reported in units of either opacity *N* or light absorption coefficient *k*. The smoke data shall then be processed by means of the Bessel algorithm, as described in 9.2. An example of the calculation procedure is given in Annex B.

The sample line length shall not affect the smoke trace. However, even though sample line length does not affect the shape of the smoke trace, it may introduce a delay between when the smoke is produced and when it is measured. The analysis of smoke traces shall account for any delay time associated with the transport of smoke in the exhaust system.

9.1.2 Beer-Lambert relationships

The Beer-Lambert law defines the relationship between transmittance, light absorption coefficient and effective optical path length as shown in Formula (3).

$$\frac{\tau}{100} = e^{-k \times L_A} \tag{3}$$

From the definitions of transmittance and opacity, the relationship between these parameters is defined as shown in Formula (4).

$$N = 100 - \tau \tag{4}$$

© ISO 2019 – All rights reserved
Documents
Document Sharing Hub
Full document details: BS ISO 8178-9:2019

From Formulae (3) and (4) the following relationships are derived:

$$N_{AS} = 100 \times \left[1 - \left(1 - \frac{N_A}{100} \right)^{\frac{L_{AS}}{L_A}} \right] \tag{5}$$

$$k = -\frac{1}{L_A} \times \ln\left(1 - \frac{N_A}{100} \right) \tag{6}$$

9.1.3 Data conversion

Conversion from as-measured smoke values to appropriate reporting units is a two-step process. Since the basic measurement unit of all opacimeters is transmittance, the first step in all cases is to convert from transmittance τ to opacity at the as-measured effective optical path length N_A using Formula (4). For most opacimeters this step is done internally and is not apparent to the user. The second step of the process is to convert from N_A to the desired reporting units as follows.

If the test results are reported in opacity units, Formula (5) shall be used to convert from opacity at the as-measured effective optical path length N_A to opacity at the standard effective optical path length N_{AS}.

NOTE In the event that the measured and standard effective optical path lengths are identical, N_{AS} is equal to $N_{A,}$ this secondary conversion step is not required.

If the test results are reported in units of light absorption coefficient, Formula (6) shall be applied.

9.1.4 Effective optical path length input values

In order to apply Formula (6), it is necessary to apply the as-measured effective optical path length (L_A). To use Formula (5), values shall be applied both for L_A and for the standard effective optical path length L_{AS}.

For full-flow end-of-line opacimeters, L_A is a function of the engine tailpipe design.

For partial-flow opacimeters and full-flow in-line opacimeters, L_A is a fixed function of the instrument measurement cell and purge air system design. Specification data supplied by the instrument manufacturer shall be used to determine the appropriate value for L_A when these types of opacimeters are used.

Typically, it is necessary to determine L_A to within ±0,002 m in order to achieve corrected smoke results that are accurate to within 2 % opacity.

Smoke opacity readings depend on the effective optical path length of the instrument. Since limit values may be established in units of percent opacity, they shall be referred to the standard effective optical path lengths (pipe diameter) at which the limit values apply. For meaningful smoke data comparisons, smoke opacity results shall be reported at the standard effective optical path lengths (L_{AS}) shown in Table 1.

For the purposes of Table 1 engine power does not need to be measured. Engine power is typically available either from a label on the engine, from the owner's manual of the engine, from the information used to apply for certification or type approval of the engine. In case that the engine power cannot be determined, it is not possible to evaluate the engine's compliance with limit values that are expressed in percent opacity.

© ISO 2019 – All rights reserved

Documents
Document Sharing Hub
Full document details: BS ISO 8178-9:2019

Table 1 — Standard effective optical path lengths

Engine power P kW	Standard effective optical path length L_{AS} m
P < 37	0,038
37 ≤ P ≤ 75	0,05
75 ≤ P ≤ 130	0,075
130 ≤ P ≤ 225	0,1
225 ≤ P ≤ 450	0,125
P ≥ 450	0,15

9.2 Signal filter algorithm

9.2.1 General

The Bessel algorithm shall be used to calculate filtered values from the instantaneous smoke readings. The algorithm can be applied to either opacity or light absorption coefficient. The algorithm emulates a low pass second order filter, and its use requires iterative calculations to determine the coefficients. These coefficients are a function of the rise time of the opacimeter system and the sampling frequency of the unfiltered signal. Therefore, the calculations given in 9.2.2 shall be repeated whenever the system rise time and/or sampling frequency changes.

9.2.2 Calculation of filter rise time and Bessel constants

The required Bessel filter rise time t_F is a function of the physical and electrical rise times of the opacimeter system and the overall rise time X and shall be calculated using Formula (7):

$$t_F = \sqrt{X^2 - \left(t_p^2 + t_e^2\right)} \tag{7}$$

where

t_p is the physical rise time, expressed in seconds (s);

t_e is the electrical rise time, expressed in seconds (s);

t_F is the filter rise time, expressed in seconds (s);

X is the overall rise time, expressed in seconds (s).

Formula (7) can be used to adjust differing opacimeters to a common overall rise time provided that both t_p and t_e are much smaller than X.

The calculations for estimating the filter cut-off frequency (f_c) are based on a step input of 0 to 1 in <0,01 s (see Annex B). The rise time is defined as the time between when the Bessel output reaches 10 % (t_{10}) and when it reaches 90 % (t_{90}) of this step function. This shall be obtained by iterating on f_c until $t_{90} - t_{10} \cong t_F$. The first iteration for f_c is calculated using Formula (8).

$$f_c = \frac{\pi}{\left(10 \times t_F\right)} \tag{8}$$

© ISO 2019 – All rights reserved
Documents
Document Sharing Hub
Full document details: BS ISO 8178-9:2019

The Bessel constants E and K shall be calculated using the Formulas (9) and (10).

$$E = \frac{1}{1 + \Omega \times \sqrt{3 \times D} + D \times \Omega^2} \tag{9}$$

$$K = 2 \times E \times \left(D \times \Omega^2 - 1 \right) - 1 \tag{10}$$

where

D equals 0,618 034;

$\Delta t = \frac{1}{f}$

$\Omega = \frac{1}{\left[\tan\left(\pi \times \Delta t \times f_c \right) \right]}$.

Using the values of E and K, the Bessel filtered rise of X to a step input S_i shall be calculated as follows

$$Y_i = Y_{i-1} + E \times \left(S_i + 2 \times S_{i-1} + S_{i-2} - 4 \times Y_{i-2} \right) + K \times \left(Y_{i-1} - Y_{i-2} \right) \tag{11}$$

where

$S_{i-2} = S_{i-1} = 0$

$S_i = 1$

$Y_{i-2} = Y_{i-1} = 0$

The times t_{10} and t_{90} shall be interpolated. The difference in time between t_{90} and t_{10} defines the filter rise time t_F for that value of f_c. If this rise time is not close enough to the required rise time, iteration shall be continued until the actual rise time is within 1 % of the required rise as follows:

$$\left| \left(t_{90} - t_{10} \right) - t_F \right| \leq 0{,}01 \times t_F \tag{12}$$

An explanation of the Bessel filter, an example of the design of a Bessel algorithm, and an example of the calculation of the final smoke value are given in Annex B. The constants of the Bessel algorithm only depend on the design of the opacimeter and the sampling frequency of the data acquisition system. It is recommended that the opacimeter manufacturer provide the final Bessel filter constants for different sampling frequencies and that the user applies these constants for designing the Bessel algorithm and for calculating the smoke values.

9.2.3 Calculation of Bessel filtered smoke

Once the proper Bessel algorithm constants E and K have been calculated in accordance with 9.2.2, the Bessel algorithm shall then be applied to the instantaneous smoke trace using Formula (11).

The Bessel algorithm is recursive in nature. Thus it needs some initial input values of S_{i-1} and S_{i-2} and initial output values Y_{i-1} and Y_{i-2} to get the algorithm started. These may be assumed to be 0.

The resultant Bessel filtered smoke values are then used to calculate the appropriate smoke values as described in the applicable Annex.

© ISO 2019 – All rights reserved

Documents
Document Sharing Hub
Full document details: BS ISO 8178-9:2019

9.3 Alternative signal handling

9.3.1 General

The Bessel filter algorithm described in 9.2 shall be used by default in this document. See Annex B for more details.

As an alternative to the Bessel filter algorithm, the specifications as given in 9.3.2 may be used for certain applications, if agreed upon by the parties involved. It should be noted that peak values determined during emission tests where different signal filter algorithms are applied will not necessarily be comparable.

9.3.2 Alternative specifications

The rise time of the electrical measuring circuit, being the time necessary for the indicating dial to reach 90 % of full-scale deflection on insertion of a screen fully obscuring the photoelectric cell, shall be 0,9 s to 1,1 s.

The damping of the electrical measuring circuit shall be such that the initial overswing beyond the final steady reading after any momentary variation in input (e.g. the calibration screen) does not exceed 4 % of that reading in linear scale units.

The rise time of the opacimeter which is due to physical phenomena in the smoke chamber is the time taken from the start of the gas entering the chamber to complete filling of the smoke chamber; it shall not exceed 0,4 s.

These provisions shall apply solely to opacimeters used to measure opacity under free acceleration.

In this document the overall rise time X is defined to be 1 s. State of the art opacimeters have a rise time (physical rise time t_p and electrical rise time t_e) much smaller than 1 s and so the Bessel Filter algorithm as described in 9.2 is applicable to achieve the overall rise time X of 1 s. For opacimeter designs, where the sum of t_p and t_e is more than 1 s, the alternative specifications may be allowed.

10 Opacimeter Design Specifications

10.1 General

10.2 and 10.4 and Figures 1 and 6 contain detailed descriptions of the full-flow and partial-flow opacimeter systems. Since various configurations can produce equivalent results, exact conformance with Figures 1 and 6 is not required. Additional components such as instruments, valves, solenoids, pumps and switches may be used to provide additional information and coordinate the functions of the component systems. Other components which are not needed to maintain the accuracy on some systems may be excluded if their exclusion is based upon good engineering judgement.

Full-flow and partial-flow opacimeters are based on the same measurement principle (exhaust gas opacity method based on light extinction). The decrease of light intensity between the light source and the receiver is caused by the exhaust gas components. The transmitted light through the specific optical path length with exhaust gas is measured at the receiver and compared with its original intensity (i.e. the intensity of the light source without the exhaust gas components).

The smoke measurement depends upon the design of the instrument and may be carried out in the exhaust pipe (full-flow in-line opacimeter), at the end of the exhaust pipe (full-flow end-of-line opacimeter) or by taking a sample from the exhaust (partial-flow opacimeter).

© ISO 2019 – All rights reserved
Documents
Document Sharing Hub
Full document details: BS ISO 8178-9:2019

10.2 Full-flow opacimeter

10.2.1 General

With the in-line opacimeter (see Figure 2), the opacity of the full exhaust plume within the exhaust pipe is measured. With this type of opacimeter, the effective optical path length is a function of the opacimeter design.

With the end-of-line opacimeter, the opacity of the full exhaust plume is measured as it exits the exhaust pipe. With this type of opacimeter, the effective optical path length is a function of the exhaust pipe design and the distance between the end of the exhaust pipe and the opacimeter.

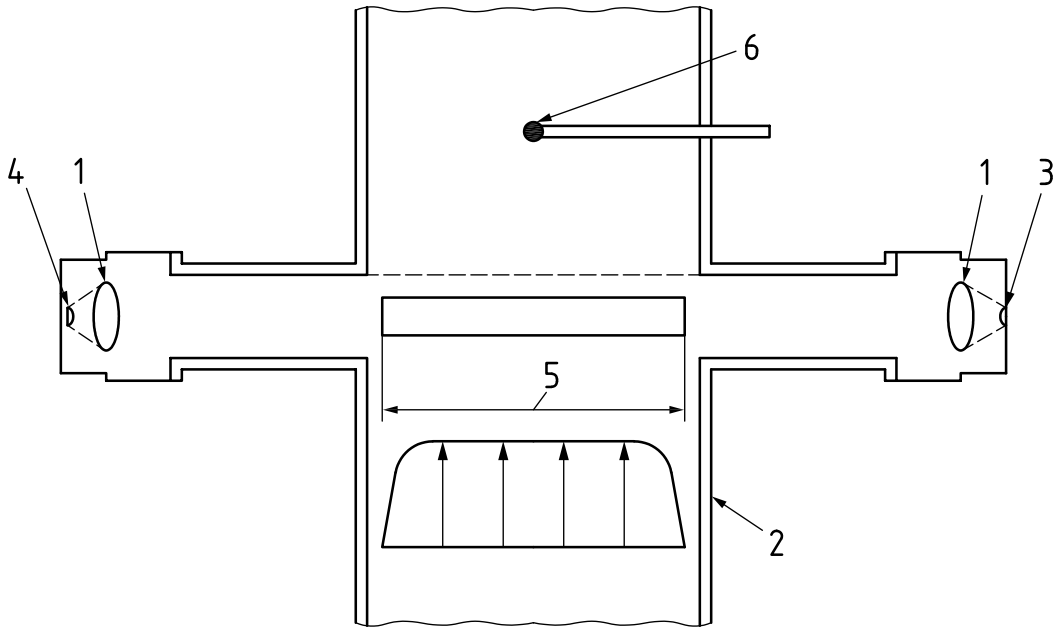

Key

1 collimating lens
2 exhaust pipe
3 light detector
4 light source
5 optical path length
6 temperature sensor (optional)

Figure 2 — Full-flow opacimeter

10.2.2 Components of a full-flow opacimeter

10.2.2.1 Light source (LS)

The light source shall be an incandescent lamp with a color temperature in the range of 2 800 K to 3 250 K or a green light emitting diode (LED) with a spectral peak between 550 nm and 570 nm. The light source shall be protected against contamination by means that do not influence the optical path length beyond the manufacturer's specifications.

10.2.2.2 Light detector (LD)

The detector shall be a photocell or a photodiode (with a filter, if necessary). In the case of an incandescent light source, the receiver shall have a peak spectral response similar to the phototopic curve of the human eye (maximum response) in the range of 550 nm to 570 nm, to less than 4 % of that

© ISO 2019 – All rights reserved

AVA Documents Document Sharing Hub
Full document details: BS ISO 8178-9:2019