BS ISO 8278:2016

BSI Standards Publication

# Aerospace series — Hydraulic, pressure compensated, variable delivery pumps — General requirements

bsi.

...making excellence a habit.™

Document Sharing Hub

## National foreword

This British Standard is the UK implementation of ISO 8278:2016. It supersedes BS M 65:1987 and BS ISO 12334:2000 which are withdrawn.

The UK participation in its preparation was entrusted to Technical Committee ACE/69, Aerospace hydraulic systems, fluids and components.

A list of organizations represented on this committee can be obtained on request to its secretary.

This publication does not purport to include all the necessary provisions of a contract. Users are responsible for its correct application.

© The British Standards Institution 2016.
Published by BSI Standards Limited 2016

ISBN 978 0 580 82363 3

ICS 49.080

**Compliance with a British Standard cannot confer immunity from legal obligations.**

This British Standard was published under the authority of the Standards Policy and Strategy Committee on 31 March 2016.

**Amendments/corrigenda issued since publication**

| Date | Text affected |
|---|---|

Documents
Document Sharing Hub

Full document details: BS ISO 8278:2016

# INTERNATIONAL STANDARD

# ISO 8278

Second edition
2016-03-01

# Aerospace series — Hydraulic, pressure compensated, variable delivery pumps — General requirements

*Série aérospatiale — Pompes hydrauliques à débit variable régulé en fonction de la pression — Exigences générales*

Reference number
ISO 8278:2016(E)

Documents
Document Sharing Hub

© ISO 2016

Full document details: BS ISO 8278:2016

**COPYRIGHT PROTECTED DOCUMENT**

© ISO 2016, Published in Switzerland

All rights reserved. Unless otherwise specified, no part of this publication may be reproduced or utilized otherwise in any form or by any means, electronic or mechanical, including photocopying, or posting on the internet or an intranet, without prior written permission. Permission can be requested from either ISO at the address below or ISO's member body in the country of the requester.

ISO copyright office
Ch. de Blandonnet 8 • CP 401
CH-1214 Vernier, Geneva, Switzerland
Tel. +41 22 749 01 11
Fax +41 22 749 09 47
copyright@iso.org
www.iso.org


© ISO 2016 – All rights reserved

Documents
Document Sharing Hub

Full document details: BS ISO 8278:2016

# Contents

Page

**Foreword** ... **vi**

**1 Scope** ... **1**

**2 Normative references** ... **1**

**3 Terms and definitions** ... **2**

**4 General requirements** ... **6**
4.1 Order of precedence ... 6
4.2 Hydraulic system characteristics ... 6
4.3 Airworthiness requirements ... 7
4.4 Qualification ... 7

**5 Functional requirements** ... **7**
5.1 Hydraulic fluid ... 7
5.2 Pump pressure ... 7
5.2.1 Rated discharge pressure ... 7
5.2.2 Maximum full-flow pressure ... 7
5.2.3 Pressure pulsations ... 8
5.2.4 Inlet pressure ... 8
5.3 Case drain pressure ... 8
5.3.1 Rated case drain pressure ... 8
5.3.2 Maximum transient case drain pressure ... 8
5.3.3 Maximum case drain pressure ... 8
5.4 Flows ... 9
5.4.1 Pump rated discharge flow ... 9
5.4.2 Pump case flow ... 9
5.4.3 Shaft seal leakage flow ... 9
5.4.4 External leakage ... 9
5.5 Speed and direction of rotation ... 10
5.5.1 Rated speed ... 10
5.5.2 Overspeed ... 10
5.5.3 Direction of rotation ... 10
5.6 Torque ... 10
5.7 Pump overall efficiency ... 10
5.8 Variable delivery control ... 15
5.8.1 General ... 15
5.8.2 Adjustment ... 15
5.8.3 Response time ... 15
5.8.4 Stability ... 16
5.8.5 Maximum transient pressure ... 17
5.9 Rated temperature ... 17
5.10 Acoustic noise level ... 17
5.11 Endurance ... 17
5.12 Environmental requirements ... 18

**6 Detail design requirements** ... **18**
6.1 Dimensionally critical components ... 18
6.2 Maintainability features ... 18
6.3 Seals ... 19
6.4 Lubrication ... 19
6.5 Balance ... 19
6.6 Self-contained failure ... 19
6.7 Safety wire sealing ... 19
6.8 Electro-conductive bonding ... 19
6.9 Marking ... 19
6.9.1 Nameplate ... 19

Documents
Document Sharing Hub

© ISO 2016 – All rights reserved


Full document details: BS ISO 8278:2016

6.9.2 Fluid identification ... 20
6.9.3 Ports ... 20

**7 Strength requirements ... 20**
7.1 General ... 20
7.2 Pressure loads ... 20
7.3 Proof pressure ... 20
7.3.1 Pump case ... 20
7.3.2 Pump inlet port ... 20
7.3.3 Pump discharge port ... 20
7.4 Ultimate pressure ... 21
7.4.1 Pump case ... 21
7.4.2 Pump inlet port ... 21
7.4.3 Pump discharge port ... 21
7.5 Pressure impulse (fatigue) ... 21
7.6 Port strength ... 21

**8 Construction requirements ... 21**
8.1 Materials ... 21
8.1.1 General ... 21
8.1.2 Metals ... 22
8.2 Corrosion protection ... 22
8.2.1 General ... 22
8.2.2 Ferrous and copper alloys ... 23
8.2.3 Aluminium alloys ... 23
8.3 Castings ... 23

**9 Installation requirements ... 23**
9.1 Dimensions ... 23
9.2 Mass ... 23
9.3 Mounting ... 23
9.4 Orientation ... 24
9.5 Drive coupling ... 24
9.6 Ports ... 24

**10 Maintenance requirements ... 24**
10.1 Maintenance concept ... 24
10.2 Service life limitations and storage specifications ... 25

**11 Reliability requirements ... 25**
11.1 Equipment compliance ... 25
11.2 Requirements ... 25

**12 Quality assurance provisions ... 25**
12.1 Responsibility for inspection ... 25
12.2 Classification of tests ... 25
12.3 Test stand requirements ... 26

**13 Acceptance tests ... 26**
13.1 General ... 26
13.2 Examination of the product ... 26
13.3 Test programme ... 26
13.3.1 General ... 26
13.3.2 External leakage requirements ... 27
13.3.3 Break-in run ... 27
13.3.4 Proof pressure test ... 27
13.3.5 Load cycles ... 27
13.3.6 Teardown inspection examination ... 27
13.3.7 Run-in ... 28
13.3.8 Functional tests ... 28
13.3.9 Pressure control test ... 28
13.3.10 Calibration ... 28


© ISO 2016 – All rights reserved
AVA Documents
Document Sharing Hub
Full document details: BS ISO 8278:2016

13.3.11 Fluid contamination test ... 29
13.3.12 Electro-conductive bonding ... 30
13.4 Storage and packaging ... 30

**14 Qualification tests ... 30**
14.1 Purpose ... 30
14.2 Qualification procedure ... 30
14.2.1 Qualification by analogy ... 30
14.2.2 Pump qualification test report ... 30
14.2.3 Samples and program of qualification tests ... 31
14.3 Qualification testing ... 31
14.3.1 Dimensional check ... 31
14.3.2 Expanded envelope acceptance tests ... 32
14.3.3 Calibration ... 32
14.3.4 Maximum pressure and response time tests ... 32
14.3.5 Pressure pulsation test ... 34
14.3.6 Heat rejection test ... 34
14.3.7 Endurance test ... 35
14.3.8 Minimum inlet pressure test ... 40
14.3.9 Environmental tests ... 41
14.3.10 Structural tests ... 41
14.3.11 Supplementary tests ... 43

**Bibliography ... 44**

© ISO 2016 – All rights reserved


Documents
Document Sharing Hub
Full document details: BS ISO 8278:2016

# Foreword

ISO (the International Organization for Standardization) is a worldwide federation of national standards bodies (ISO member bodies). The work of preparing International Standards is normally carried out through ISO technical committees. Each member body interested in a subject for which a technical committee has been established has the right to be represented on that committee. International organizations, governmental and non-governmental, in liaison with ISO, also take part in the work. ISO collaborates closely with the International Electrotechnical Commission (IEC) on all matters of electrotechnical standardization.

The procedures used to develop this document and those intended for its further maintenance are described in the ISO/IEC Directives, Part 1. In particular the different approval criteria needed for the different types of ISO documents should be noted. This document was drafted in accordance with the editorial rules of the ISO/IEC Directives, Part 2 (see www.iso.org/directives).

Attention is drawn to the possibility that some of the elements of this document may be the subject of patent rights. ISO shall not be held responsible for identifying any or all such patent rights. Details of any patent rights identified during the development of the document will be in the Introduction and/or on the ISO list of patent declarations received (see www.iso.org/patents).

Any trade name used in this document is information given for the convenience of users and does not constitute an endorsement.

For an explanation on the meaning of ISO specific terms and expressions related to conformity assessment, as well as information about ISO's adherence to the WTO principles in the Technical Barriers to Trade (TBT) see the following URL: Foreword - Supplementary information

The committee responsible for this document is ISO/TC 20, *Aircraft and space vehicles*, Subcommittee SC 10, *Aerospace fluid systems and components*.

This second edition cancels and replaces the first edition (ISO 8278:1986) and ISO 12334:2000, which have been technically revised.


© ISO 2016 – All rights reserved
Documents
Document Sharing Hub
Full document details: BS ISO 8278:2016

INTERNATIONAL STANDARD ISO 8278:2016(E)

# Aerospace series — Hydraulic, pressure compensated, variable delivery pumps — General requirements

## 1 Scope

This International Standard establishes the general requirements for pressure compensated, variable delivery hydraulic pumps, suitable for use in aircraft hydraulic systems at pressures up to 35 000 kPa (5 000 psi).

This International Standard is to be used in conjunction with detail specifications that is particular to each application.

## 2 Normative references

The following documents, in whole or in part, are normatively referenced in this document and are indispensable for its application. For dated references, only the edition cited applies. For undated references, the latest edition of the referenced document (including any amendments) applies.

ISO 2093, *Electroplated coatings of tin — Specification and test methods*

ISO 2669, *Environmental tests for aircraft equipment — Steady-state acceleration*

ISO 2671, *Environmental tests for aircraft equipment — Part 3.4 : Acoustic vibration*

ISO 2685, *Aircraft — Environmental test procedure for airborne equipment — Resistance to fire in designated fire zones*

ISO 3323, *Aircraft — Hydraulic components — Marking to indicate fluid for which component is approved*

ISO 3601-1:2012, *Fluid power systems — O-rings — Part 1: Inside diameters, cross-sections, tolerances and designation codes*

ISO 7137, *Aircraft — Environmental conditions and test procedures for airborne equipment*

ISO 7320, *Aerospace — Couplings, threaded and sealed, for fluid systems — Dimensions*

ISO 8078, *Aerospace process — Anodic treatment of aluminium alloys — Sulfuric acid process, undyed coating*

ISO 8079, *Aerospace process — Anodic treatment of aluminium alloys — Sulfuric acid process, dyed coating*

ISO 8081, *Aerospace process — Chemical conversion coating for aluminium alloys — General purpose*

ISO 8399-1, *Aerospace — Accessory drives and mounting flanges (Metric series) — Part 1: Design criteria*

ISO 8399-2, *Aerospace — Accessory drives and mounting flanges (Metric series) — Part 2: Dimensions*

ISO 8625-1, *Aerospace — Fluid systems — Vocabulary — Part 1: General terms and definitions related to pressure*

ISO 8625-2, *Aerospace — Fluid systems — Vocabulary — Part 2: General terms and definitions relating to flow*

ISO 8625-3, *Aerospace — Fluid systems — Vocabulary — Part 3: General terms and definitions relating to temperature*

© ISO 2016 – All rights reserved



Documents
Document Sharing Hub
Full document details: BS ISO 8278:2016

ISO 11218:—[1], *Aerospace — Cleanliness classification for hydraulic fluids*

## 3 Terms and definitions

For the purposes of this document, the terms and definitions given in ISO 8625-1, ISO 8625-2, ISO 8625-3, and the following apply.

**3.1**
**variable delivery hydraulic pump**
self-regulating hydraulic pump that supplies hydraulic power to the hydraulic system (or subsystem) at a nominal constant pressure

Note 1 to entry: The pump can be driven by a variety of power sources, including the following:

— by an engine via an accessory gearbox;

— electric motor;

— pneumatic power drive.

**3.2**
**purchaser**
organization that has the engineering responsibility for the hydraulic system that includes the pump

Note 1 to entry: Typically, the purchaser is an aircraft manufacturer, an equipment manufacturer that has hydraulic system responsibility or a modification centre.

Note 2 to entry: The purchaser is responsible for the compilation of the detail specification.

**3.3**
**detail specification**
document compiled by the purchaser that specifies the following:

a) technical requirements;

b) acceptance and qualification test requirements;

c) reliability requirements;

d) quality requirements;

e) packaging requirements;

f) other requirements

**3.4**
**supplier**
organization that provides the pump

Note 1 to entry: Typically, the supplier is the manufacturer of the pump who will be responsible for the design, production and qualification of the pump.

### 3.5 Ports of the hydraulic pump

**3.5.1**
**pump inlet port**
port that receives flow from the hydraulic reservoir to supply the pump

1) To be published. (Revision of ISO 11218:1993)


© ISO 2016 – All rights reserved
Documents
Document Sharing Hub
Full document details: BS ISO 8278:2016

**3.5.2**
**pump discharge port**
port that supplies pressurized flow to the system

**3.5.3**
**pump case drain port**
port that drains internal leakage flow to the reservoir

**3.5.4**
**shaft seal port**
port that routes any shaft seal leakage from the pump to an overboard drain, collector tank, etc.

### 3.6 Temperature terms

**3.6.1**
**rated temperature**
maximum continuous temperature of the fluid to be supplied at the supply port of the pump

Note 1 to entry: The rated temperature is expressed in degrees centigrade.

**3.6.2**
**minimum continuous temperature**
minimum continuous temperature of the fluid to be supplied at the supply port of the pump

Note 1 to entry: The minimum continuous temperature is expressed in degrees centigrade.

### 3.7 Pressure terms

**3.7.1**
**design operating pressure**
normal maximum steady pressure

Note 1 to entry: Excluded are reasonable tolerances, transient pressure effects such as may arise from

— pressure ripple,

— reactions to system functioning, and

— demands that may affect fatigue.

#### 3.7.2 Inlet pressure

**3.7.2.1**
**rated inlet pressure**
minimum pressure measured at the inlet port of the pump at which the pump is required to provide performance without any degradation, with all other parameters at their rated values, except for the fluid temperature, which is the minimum continuous temperature

**3.7.2.2**
**maximum inlet pressure**
maximum steady-state inlet pressure at which the pump may be required to operate

**3.7.2.3**
**minimum inlet pressure**
lowest pump inlet port pressure, specified by the purchaser, for which the supplier ensures that the pump might be required to operate without cavitation during a system failure or when the pump is delivering the maximum flow

Note 1 to entry: For the purposes of this International Standard, cavitation is assumed to occur when there is a 2 % reduction in discharge flow with reducing inlet pressure.

© ISO 2016 – All rights reserved

Documents
Document Sharing Hub
Full document details: BS ISO 8278:2016

**3.7.3**
**discharge pressure**
maximum pressure against which the pump is required to operate continuously at rated temperature, at rated speed and at zero flow

Note 1 to entry: See Figure 1.

Note 2 to entry: This diagram is given as an indication. It may be presented in a different way, for example, the axes may be reversed.

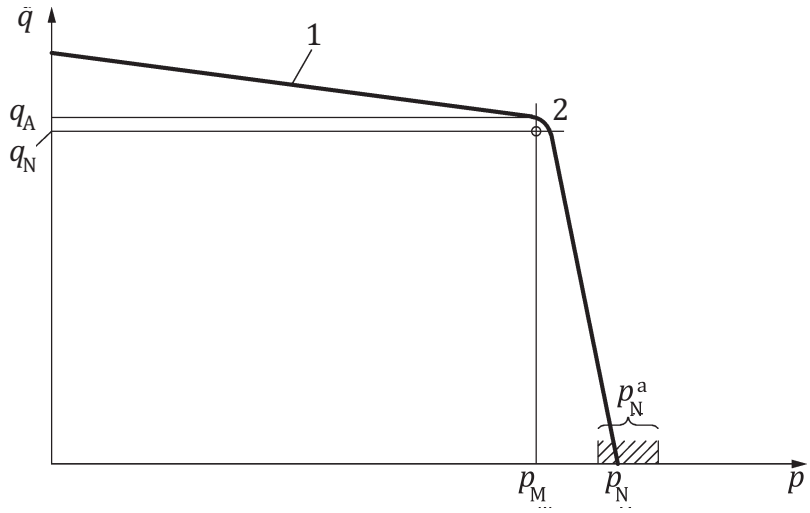


**Key**

1 actual discharge/pressure characteristic curve
2 at $p_M$, $q_A > q_N$
$p$ pressure
$p_M$ *maximum full-flow pressure* (3.7.3.1)
$p_N$ rated discharge pressure
$p_N^a$ tolerance range
$q$ discharge flow
$q_A$ maximum *rated discharge flow* (3.8)
$q_N$ minimum rated discharge flow

**Figure 1 — Delivery/pressure characteristic curve of pumps**

**3.7.3.1**
**maximum full-flow pressure**
maximum discharge pressure at which the pump control will not be acting to reduce pump discharge, at rated temperature, rated speed, rated inlet and case drain pressure

**3.7.3.2**
**maximum pump discharge transient pressure**
peak value of the discharge pressure recorded during a discrete transient event (normally found whilst cycling from full-flow pressure to rated pressure (zero flow))

**3.7.3.3**
**pressure pulsations**
oscillations of the pump discharge pressure, occurring during nominally steady operating conditions, at a frequency equal to the number of pistons times the drive shaft speed or a multiple thereof

Note 1 to entry: The amplitude of the oscillations is the difference between the average minimum and the average maximum oscillations recorded during a one-second trace.


© ISO 2016 – All rights reserved
Documents
Document Sharing Hub
Full document details: BS ISO 8278:2016

### 3.7.4 Case drain pressure

**3.7.4.1**
**maximum case drain pressure**
maximum continuous pressure developed by the pump to enable case drain fluid to return to the reservoir

**3.7.4.2**
**rated case drain pressure**
nominal pressure at which the pump case is required to operate continuously in the system

**3.7.4.3**
**maximum transient case pressure**
maximum pressure peak that may be imposed by the hydraulic system on the pump case drain port

**3.8**
**rated discharge flow**
flow rate measured at the pump delivery port under conditions of

— rated fluid temperature,

— rated inlet pressure,

— rated case drain pressure,

— maximum full-flow pressure, and

— using the hydraulic fluid specified in the detail specification

Note 1 to entry: The flow shall be measured in the compressed state.

**3.9**
**rated displacement**
maximum theoretical volume of fluid generated by one revolution of the pump drive shaft at full stroke

Note 1 to entry: The rated displacement shall be calculated from the geometrical configuration of the pump, without allowing for the effects of the following:

— permissible manufacturing tolerances;

— distortions of the pump structure;

— the compressibility of the hydraulic fluid;

— internal leakage;

— temperature.

Note 2 to entry: The rated displacement is used to indicate the size of the pump rather than its performance.

**3.10**
**rated speed**
maximum speed at which the pump will operate

Note 1 to entry: The rated speed is expressed as a number of revolutions of the pump drive shaft per minute.

**3.11**
**response time**
time interval between the moment when an increase (or decrease) of the pump delivery pressure begins and the subsequent time when the delivery pressure reaches its first maximum (or minimum) value, when connected to a specified circuit

© ISO 2016 – All rights reserved

Documents
Document Sharing Hub
Full document details: BS ISO 8278:2016

**3.12**
**stability**
freedom from persistent or quasi-persistent oscillation or "hunting" of the pump (cyclic variations in speed) at any frequency that can be traced to the delivery control mechanism, within stated limits in the detail specification

**3.13**
**pump overall efficiency**
pump overall efficiency (including volumetric efficiency) is obtained from the formula:

pump overall efficiency (%) = (output fluid power/input shaft power) × 100

where

input shaft power is shaft torque × RPM;

output fluid power is (full-flow pressure – inlet pressure) × rated flow

Note 1 to entry: This formula ignores compressibility effects. If this formula is to be used, the flow rate measurement should be made on the compressed flow stream.

**3.14**
**rated endurance**
total number of hours and cycles of operation to be included in the endurance phase of its qualification testing

**3.15**
**first article inspection**
**FAI**
process that conducts the following:

— verifies that the parts of a component complies with the drawings;

— verifies that the manufacturing processes have been compiled and are adhered to;

— verifies that the assembly processes have been compiled and are adhered to;

— verifies that the acceptance test of the component is in accordance with the test procedure and that the results of the test are in agreement with the test requirements

# 4 General requirements

## 4.1 Order of precedence

The detail specification shall take precedence in the case of a conflict between the requirements of this International Standard and the detail specification.

## 4.2 Hydraulic system characteristics

The hydraulic pump shall be designed to supply the hydraulic system as defined in the detail specification.

The detail specification shall include the characteristics of the hydraulic system in which the pump is to be used. This shall include the flow versus pressure curves for the inlet, discharge and case drain lines for the following hydraulic fluid temperatures:

— normal operating temperature (for example, +20 °C);

— rated temperature;


© ISO 2016 – All rights reserved
Documents
Document Sharing Hub
Full document details: BS ISO 8278:2016

— minimum continuous temperature.

### 4.3 Airworthiness requirements

The hydraulic pump shall comply with the applicable airworthiness requirements.

### 4.4 Qualification

Hydraulic pumps furnished under this International Standard shall be products that have passed the qualification tests specified in the detail specification.

## 5 Functional requirements

### 5.1 Hydraulic fluid

The detail specification shall state the applicable hydraulic fluid.

### 5.2 Pump pressure

#### 5.2.1 Rated discharge pressure

The design of the pump shall be such as to maintain rated discharge pressure at the following combination and range of conditions:

— from 30 °C to rated temperature;

— from 50 % to 125 % of rated speed;

— at rated inlet pressure.

The value of the rated discharge pressure shall be stated in the detail specification and shall be one of the following values of rated discharge pressure listed in Table 1 (derived from ISO 6771):

**Table 1 — Rated discharge pressure**

| **Pressure class** | **Metric system** kPa basic | **Imperial system** psi basic |
|---|---|---|
| A | 4 000 | 600 |
| B | 10 500 | 1 500 |
| C | 16 000 | 2 500 |
| D | 21 000 | 3 000 |
| E | 28 000 | 4 000 |
| J | 35 000 | 5 000 |

The maximum and minimum tolerance of the rated discharge pressure shall be specified in the detail specification. The permissible tolerance range shall be doubled in each direction for fluid temperatures below 30 °C or pump speeds from 25 % to 50 % of rated speed.

#### 5.2.2 Maximum full-flow pressure

The maximum full-flow pressure of the pump shall be defined as the maximum discharge pressure at which the pump control will not be acting to reduce pump delivery at rated temperature, speed and inlet pressure.

The detail specification shall specify the minimum value of the maximum full-flow pressure (see Figure 1).

© ISO 2016 – All rights reserved

Documents
Document Sharing Hub
Full document details: BS ISO 8278:2016

#### 5.2.3 Pressure pulsations

The detail specification shall state the maximum permitted amplitude of the discharge pressure pulsations.

The amplitude of pressure pulsations shall be determined by the test procedure of 14.3.5.

#### 5.2.4 Inlet pressure

##### 5.2.4.1 General

The inlet pressure shall be measured at the inlet port of the pump in a manner that indicates the static head.

##### 5.2.4.2 Rated inlet pressure

The detail specification shall state the value of rated inlet pressure, which shall be in kPa (or psi) absolute.

##### 5.2.4.3 Minimum inlet pressure

The detail specification shall state the following:

— the value of the minimum inlet pressure, which shall be in kPa (or psi) absolute and whether it applies during a short term high flow condition or during a steady-state failure case;

— the associated minimum hydraulic fluid temperature;

— any allowable performance degradation when the pump is operating at the minimum inlet pressure.

The purchaser shall specify the inlet conditions that will exist at the pump inlet including the provision of the circuit impedance for the pump inlet and discharge piping system and/or a complete physical description of the circuit. This is to enable the supplier to conduct a dynamic flow analysis to determine the pump operation at the minimum inlet pressure.

##### 5.2.4.4 Maximum inlet pressure

The detail specification shall state the value of the maximum steady-state inlet pressure, which shall be in kPa (or psi) absolute.

### 5.3 Case drain pressure

#### 5.3.1 Rated case drain pressure

The detail specification shall state the value of the rated case drain pressure for the pump case, which shall be in kPa (or psi).

#### 5.3.2 Maximum transient case drain pressure

The detail specification shall state the value, duration and frequency of occurrence of the maximum transient case drain pressure for the pump case, which shall be in kPa (or psi).

#### 5.3.3 Maximum case drain pressure

The detail specification shall state the value of the maximum case drain pressure for the pump case, which shall be in kPa (or psi).


© ISO 2016 – All rights reserved
Documents
Document Sharing Hub
Full document details: BS ISO 8278:2016

## 5.4 Flows

### 5.4.1 Pump rated discharge flow

The detail specification shall state the value of the rated pump discharge flow, which shall be in l/min (or gpm). The minimum and maximum rated discharge flow (see Figure 1) shall be specified.

### 5.4.2 Pump case flow

The detail specification shall state that the pump shall be capable of producing at least a minimum case drain flow to limit the differential temperature between the inlet port and the case drain port to a stated maximum value.

The pump case flow rate [which shall be in l/min (or gpm)] shall be specified under the following conditions:

— rated discharge pressure (minimum attainable steady-state flow);

— rated temperature;

— any discharge flow demand between 5 % to 100 % of rated flow;

— a given maximum differential pressure between case pressure and inlet pressure.

The minimum and maximum case drain flow shall be stated at conditions specified in the detail specification.

If the case drain flow is routed to a system heat exchanger, the detail specification shall state the minimum case flow.

### 5.4.3 Shaft seal leakage flow

The detail specification shall state the value of the maximum dynamic shaft seal leakage (which shall be in drops/min) at the following conditions:

a) new build:

   1) the pump filled with fluid but un-pressurized;

   2) when subject to proof pressure at ambient temperature;

   3) when the pump is supplying rated discharge flow;

b) qualification testing:

   1) over the expanded test envelope;

   2) at the completion of the endurance test;

   3) when subject to proof pressure at rated temperature;

   4) when subject to burst pressure at rated temperature.

### 5.4.4 External leakage

No leakage sufficient to form a drop from the pump case or from any case static seal shall be permitted. Dynamic shaft seal leakage shall not be considered as external leakage.

© ISO 2016 – All rights reserved

Documents
Document Sharing Hub
Full document details: BS ISO 8278:2016