BS ISO 834-10:2014

BSI Standards Publication

Fire resistance tests — Elements of building construction

Part 10: Specific requirements to determine the contribution of applied fire protection materials to structural steel elements

bsi.

...making excellence a habit.™

Document Sharing Hub

Full document details: BS ISO 834-10:2014

National foreword

This British Standard is the UK implementation of ISO 834-10:2014.

The UK participation in its preparation was entrusted to Technical Committee FSH/22/-/12, Fire resistance tests For Protection Systems.

A list of organizations represented on this committee can be obtained on request to its secretary.

This publication does not purport to include all the necessary provisions of a contract. Users are responsible for its correct application.

© The British Standards Institution 2014. Published by BSI Standards Limited 2014

ISBN 978 0 580 78004 2

ICS 13.220.50

Compliance with a British Standard cannot confer immunity from legal obligations.

This British Standard was published under the authority of the Standards Policy and Strategy Committee on 28 February 2014.

Amendments issued since publication

Date	Text affected

Documents
Document Sharing Hub

Full document details: BS ISO 834-10:2014

INTERNATIONAL STANDARD

ISO 834-10

First edition
2014-03-01

Fire resistance tests — Elements of building construction —

Part 10: Specific requirements to determine the contribution of applied fire protection materials to structural steel elements

Essais de résistance au feu — Éléments de construction —

Partie 10: Exigences spécifiques pour déterminer la contribution des matériaux de protection appliqués aux éléments des structures en acier

Reference number
ISO 834-10:2014(E)

Documents
Document Sharing Hub
© ISO 2014

Full document details: BS ISO 834-10:2014

COPYRIGHT PROTECTED DOCUMENT

© ISO 2014

All rights reserved. Unless otherwise specified, no part of this publication may be reproduced or utilized otherwise in any form or by any means, electronic or mechanical, including photocopying, or posting on the internet or an intranet, without prior written permission. Permission can be requested from either ISO at the address below or ISO's member body in the country of the requester.

ISO copyright office
Case postale 56 • CH-1211 Geneva 20
Tel. + 41 22 749 01 11
Fax + 41 22 749 09 47
E-mail copyright@iso.org
Web www.iso.org

Published in Switzerland

© ISO 2014 – All rights reserved

Documents
Document Sharing Hub

Full document details: BS ISO 834-10:2014

Contents

Page

Foreword ... **v**
Introduction ... **vi**
1 Scope ... **1**
2 Normative references ... **1**
3 Terms and definitions ... **2**
4 Symbols and abbreviated terms ... **4**
5 Test equipment ... **5**
5.1 General ... 5
5.2 Furnace ... 5
5.3 Loading equipment ... 5
6 Test conditions ... **5**
6.1 General ... 5
6.2 Support and loading conditions ... 5
7 Test specimens ... **11**
7.1 General ... 11
7.2 Specimen design and preparation ... 12
7.3 Composition of test component materials ... 16
7.4 Selection of test specimens ... 19
8 Installation of the test specimens ... **20**
8.1 Loaded beams ... 20
8.2 Unloaded beams ... 21
8.3 Loaded columns ... 21
8.4 Unloaded columns ... 21
8.5 Test specimen installation patterns ... 21
8.6 Furnace load ... 22
9 Conditioning of the test specimens ... **22**
10 Application of instrumentation ... **23**
10.1 General ... 23
10.2 Instrumentation for measurement of furnace temperature ... 23
10.3 Instrumentation for measurement of steel temperatures ... 25
10.4 Instrumentation for measurement of furnace pressure ... 29
10.5 Instrumentation for measurement of deformation ... 30
10.6 Instrumentation for measurement of load ... 30
11 Test procedure ... **30**
11.1 General ... 30
11.2 Furnace temperature and pressure ... 30
11.3 Application and control of load ... 30
11.4 Measurements and observations ... 31
12 Test results ... **31**
12.1 Acceptability of test results ... 31
13 Presentation of test results ... **32**
14 Test report ... **33**
14.1 General ... 33
Annex A (normative) **Measurement of properties of passive fire protection materials** ... **35**
Annex B (normative) **Measurement of properties of reactive protection materials** ... **38**
Annex C (normative) **Selection of test specimens - passive fire protection** ... **40**

Documents
Document Sharing Hub

© ISO 2014 – All rights reserved

Full document details: BS ISO 834-10:2014

Annex D (normative) **Principle of selection of test specimens - reactive fire protection** **46**
Annex E (normative) **Fixing of thermocouples to steelwork and routing cables** **52**
Annex F (informative) **Test method to the smouldering fire (slow heating curve)** **54**
Annex G (informative) **Tables of section factors** **57**
Bibliography **61**

© ISO 2014 – All rights reserved
Documents
Document Sharing Hub
Full document details: BS ISO 834-10:2014

Foreword

ISO (the International Organization for Standardization) is a worldwide federation of national standards bodies (ISO member bodies). The work of preparing International Standards is normally carried out through ISO technical committees. Each member body interested in a subject for which a technical committee has been established has the right to be represented on that committee. International organizations, governmental and non-governmental, in liaison with ISO, also take part in the work. ISO collaborates closely with the International Electrotechnical Commission (IEC) on all matters of electrotechnical standardization.

The procedures used to develop this document and those intended for its further maintenance are described in the ISO/IEC Directives, Part 1. In particular the different approval criteria needed for the different types of ISO documents should be noted. This document was drafted in accordance with the editorial rules of the ISO/IEC Directives, Part 2 (see www.iso.org/directives).

Attention is drawn to the possibility that some of the elements of this document may be the subject of patent rights. ISO shall not be held responsible for identifying any or all such patent rights. Details of any patent rights identified during the development of the document will be in the Introduction and/or on the ISO list of patent declarations received (see www.iso.org/patents).

Any trade name used in this document is information given for the convenience of users and does not constitute an endorsement.

For an explanation on the meaning of ISO specific terms and expressions related to conformity assessment, as well as information about ISO's adherence to the WTO principles in the Technical Barriers to Trade (TBT) see the following URL: Foreword - Supplementary information

The committee responsible for this document is ISO/TC 92, *Fire safety*, Subcommittee SC 2, *Fire containment*.

ISO 834 consists of the following parts, under the general title *Fire resistance tests — Elements of building construction*:

— *Part 1: General requirements*

— *Part 2: Guidance on measuring uniformity of furnace exposure on test samples* [Technical Report]

— *Part 3: Commentary on test method and guide to the application of the outputs from the fire-resistance test* [Technical Report]

— *Part 4: Specific requirements for loadbearing vertical separating elements*

— *Part 5: Specific requirements for loadbearing horizontal separating elements*

— *Part 6: Specific requirements for beams*

— *Part 7: Specific requirements for columns*

— *Part 8: Specific requirements for non-loadbearing vertical separating elements*

— *Part 9: Specific requirements for non-loadbearing ceiling elements*

— *Part 10: Specific requirements to determine the contribution of applied fire protection materials to structural steel elements*

— *Part 11: Specific requirements for the assessment of fire protection to structural steel elements*

— *Part 12: Specific requirements for separating elements evaluated on less than full scale furnaces*

Documents
Document Sharing Hub

© ISO 2014 – All rights reserved

Full document details: BS ISO 834-10:2014

Introduction

This part of ISO 834 specifies a method for testing fire protection systems applied to structural steel members employed in buildings as beams, columns, or tension members. This part of ISO 834 is intended for use in conjunction with the assessment protocol described in ISO 834-11.

© ISO 2014 – All rights reserved
Documents
Document Sharing Hub
Full document details: BS ISO 834-10:2014

INTERNATIONAL STANDARD ISO 834-10:2014(E)

Fire resistance tests — Elements of building construction —

Part 10: Specific requirements to determine the contribution of applied fire protection materials to structural steel elements

1 Scope

This part of ISO 834 specifies a method for testing fire protection systems applied to structural steel members used in buildings as beams, columns, or tension members. This part of ISO 834 is intended for use in conjunction with the assessment protocol described in ISO 834-11. It applies to steel sections (including hollow sections) and only considers sections without openings in the web. Results from analysis of I or H sections are directly applicable to angles, channels, and T-sections for the same section factor, whether used as individual members, e.g. bracing, or part of a fabricated structural system such as a steel truss construction. This part of ISO 834 does not apply to solid bar, rod, or concrete-filled hollow sections.

This part of ISO 834 describes the fire test procedures that specify the tests which should be carried out to determine the ability of the fire protection system to remain sufficiently coherent and in position for a well-defined range of deformations, furnace, and steel temperatures, such that the efficacy of the fire protection system is not significantly impaired, and to provide data on the thermal characteristics of the fire protection system when exposed to the standard temperature/time curve specified in ISO 834-1.

In special circumstances, where specified in National Building Regulations, there can be a requirement to subject reactive fire protection materials to a smouldering curve. The test and the requirements for its use are described in Annex G.

This part of ISO 834 is applicable to both passive and reactive fire protection systems as defined in the terms and definitions, which are installed or applied in such a way that they remain in place for the intended duration of fire exposure.

The fire test methodology makes provision for the collection and presentation of data which is then used as direct input into ISO 834-11 to determine the limits of direct application to steel sections of various shapes, sizes, and fire resistance periods.

2 Normative references

The following documents, in whole or in part, are normatively referenced in this document and are indispensable for its application. For dated references, only the edition cited applies. For undated references, the latest edition of the referenced document (including any amendments) applies.

ISO 834-1, *Fire-resistance tests — Elements of building construction — Part 1: General requirements*

ISO 834-6, *Fire-resistance tests — Elements of building construction — Part 6: Specific requirements for beams*

ISO 834-7, *Fire-resistance tests — Elements of building construction — Part 7: Specific requirements for columns*

ISO 1182:2010, *Reaction to fire tests for products — Non-combustibility test*

© ISO 2014 – All rights reserved

Documents
Document Sharing Hub
Full document details: BS ISO 834-10:2014

ISO 1716, *Reaction to fire tests for products — Determination of the gross heat of combustion (calorific value)*

ISO 8421-2, *Fire protection — Vocabulary — Part 2: Structural fire protection*

ISO 13943, *Fire safety — Vocabulary*

IEC 584-1, *Thermocouples – Part 1: Reference tables*

3 Terms and definitions

For the purposes of this document, the terms and definitions given in ISO 834-1, ISO 13943, ISO 8421-2, and the following apply.

3.1
characteristic steel temperature
temperature of the structural steel member which is used for the determination of the correction factor for stickability calculated as (mean temperature + maximum temperature)/2

3.2
design temperature
temperature of the steel member for structural design purposes

3.3
fire protection
protection afforded to the steel member by the fire protection system such that the temperature of the steel member is limited throughout the period of fire exposure

3.4
fire protection system
fire protection material together with any supporting system including mesh reinforcement as tested

Note 1 to entry: The reactive fire protection materials system includes the primer and top coat if applicable.

3.5
fire protection thickness
dry thickness of a single-layer fire protection system or the combined thickness of all layers of a fire protection system

Note 1 to entry: The thickness of elements of the supporting system or joint cover strips are not included in the fire protection thickness.

Note 2 to entry: For reactive fire protection systems, the thickness is the mean dry film thickness of the coating excluding primer and top coat if applicable.

3.6
H section
steel member with wide flanges compared with the section depth whose main function is to carry axial loads parallel to its longitudinal axis which can be combined with bending and shear

3.7
I section
steel joist or girder with short flanges shaped like a letter “I” whose main function is to carry loads transverse to its longitudinal axis

Note 1 to entry: These loads usually cause bending of the beam member. The flanges may be parallel or tapered.

© ISO 2014 – All rights reserved
Documents
Document Sharing Hub
Full document details: BS ISO 834-10:2014

3.8
passive fire protection material
materials, which do not change their physical form on heating, providing protection by virtue of their physical or thermal properties

Note 1 to entry: They may include materials containing water or undergo endothermic reactions which, on heating, produce cooling effects. These may take the form of sprayed coatings, renderings, mat products, boards, or slabs.

3.9
reactive fire protection material
materials which are specifically formulated to provide a chemical reaction upon heating such that their physical form changes and in so doing provide fire protection by thermal insulative and cooling effects

3.10
reference section
steel section which is taken from the same length of steel as its equivalent loaded section

3.11
section factor (unprotected steel)
ratio of the fire exposed perimeter area of the structural steel member, per unit length, A_m, to its cross sectional volume per unit length, V

3.12
section factor (profiled fire protection systems):
ratio of the fire-exposed outer perimeter area of the steel structural member excluding the protection material, per unit length, A_m, to its cross-sectional volume per unit length, V

3.13
section factor (boxed fire protection systems)
ratio of the internal surface area of the smallest possible rectangle or square box encasement which can be measured around the steel structural member, A_m, to its volume per unit length, V

3.14
steel member
element of building construction, which is load bearing and fabricated from steel

Note 1 to entry: For the purpose of this part of ISO 834, the steel used in the testing must be of the same type.

3.15
steel temperature
overall mean temperature to be used as input data for the analysis which is calculated as follows:

— For I and H section beams, this refers to the mean of the upper flange temperatures plus the mean temperature of the web plus the mean temperature of the lower flange, divided by three.

— For I, H, and hollow section columns, this refers to the sum of the mean temperature of each measuring station divided by the number of measuring stations.

— For hollow section beams, this refers to the mean temperature of the sides of the section plus the mean temperature of the bottom face, divided by two

3.16
stickability
ability of a fire protection system to remain sufficiently coherent and in position for a well-defined range of deformations, furnace, and steel temperatures, such that its ability to provide fire protection is not significantly impaired

© ISO 2014 – All rights reserved

Documents
Document Sharing Hub
Full document details: BS ISO 834-10:2014

3.17
test package
set of steel sections which may include short or long specimens that is tested to demonstrate adequate stickability of the fire protection system and to provide thermal data over a range of protection thickness, steel section factor, and steel temperatures

3.18
test specimen
steel section plus the fire protection system under test

Note 1 to entry: The steel test section, representative of a steel member for the purposes of this test, comprises long and short steel columns or beams.

4 Symbols and abbreviated terms

Symbol	Unit	Description
A	m^2	area
A_m	m^2	exposed perimeter area of the structural steel member, per unit length
A_p	m^2	for profile protection: exposed outer perimeter area of the structural steel member excluding the protection material, per unit length for encased protection: the internal surface area of the smallest possible rectangle or square box encasement which can be measured around the structural steel member
b	m	breadth of the steel section
d	mm	thickness
d_{aver}	mm	average thickness
d_p	mm	thickness of fire protection material
$d_{p(max)}$	mm	maximum thickness of fire protection material
$d_{p(min)}$	mm	minimum thickness of fire protection material
h	mm	depth of the steel section
K_d	-	range factor for thickness
K_s	-	range factor for section factor
L_{exp}	mm	length of beam section exposed to heating
L_{spec}	mm	total length of specimen
L_{sup}	mm	length of beam section between supports
P	m	perimeter of the steel section exposed to fire
s_p	m^{-1}	section factor at factor K_s
s_{max}	m^{-1}	maximum section factor at K_s factor of 1
s_{min}	m^{-1}	minimum section factor at K_s factor of 0
t_f	mm	thickness of the flange of the steel section
t_w	mm	thickness of the wall of the hollow steel section or web thickness of an I section or H column
V	m^3/m	volume of the steel section per unit length
V_p	m^3/m	volume of the fire protection per unit length
LB	–	loaded beam
LC	–	loaded 3m column section
TC	–	unloaded tall (2 m) column section
LHB	–	loaded hollow beam
LHC	–	loaded hollow column
SIB	–	short I section beam

© ISO 2014 – All rights reserved
Documents
Document Sharing Hub
Full document details: BS ISO 834-10:2014

Symbol	Unit	Description
SIC	–	short I section column
TCHS	–	tall circular hollow beam
TRHS	–	tall rectangular hollow beam
SHB	–	short hollow beam
SHC	–	short hollow column
RB	–	reference beam

5 Test equipment

5.1 General

The furnace and test equipment shall conform to what is specified in ISO 834-1.

5.2 Furnace

The furnace shall be designed to accommodate the dimensions of the test specimens to be exposed to heating as specified in 7.2 and their installation either upon or within the test furnace as specified in Clause 8.

5.3 Loading equipment

Loading shall be applied according to ISO 834-1. The loading system shall permit loading to be applied to beams as specified in 6.2.2 and to columns as specified in 6.2.4.

6 Test conditions

6.1 General

The procedures given in ISO 834-1 shall be followed in the performance of the test unless specific contrary instructions are given.

A number of steel members “I”, “H”, and hollow test sections, protected by the fire protection system, are heated in a furnace according to the protocol given in ISO 834-1.

Loaded beams and loaded columns are heated to provide information on the ability of the fire protection system to remain intact and adhere to the steel members (stickability). Unloaded beams and unloaded columns are heated to provide information on the thermal characteristics of the fire protection system.

It is recommended that the tests be continued until the steel temperature reaches the maximum value commensurate with the application of the data.

The method of testing loaded beams in this part of the test method is designed to provide maximum deflection (span/30) under the influence of load and heating as defined in ISO 834-1. If this is not possible, then the rate of deflection exceeds what is given in ISO 834-1.

Where several test specimens are tested simultaneously, care shall be taken that each be similarly exposed to the specified test conditions.

6.2 Support and loading conditions

6.2.1 General

Details of the calculations made to define the test loads shall be included in the test report.

© ISO 2014 – All rights reserved

Documents
Document Sharing Hub
Full document details: BS ISO 834-10:2014

6.2.2 Loaded beams

For each loaded beam test specimen, provision shall be made for the proper support, positioning, and alignment in the furnace in accordance with ISO 834-6, subject to any amended requirements of this part of ISO 834.

The beam shall not be provided with additional torsional restraint except where deemed necessary as in 7.2.1. The simply supported span (L_{sup}) shall not be greater than the length exposed to heating by more than 400 mm at each end. The length of the specimen (L_{spec}) shall be the exposed length plus up to a maximum 500 mm at each end.

The loaded beam test specimens shall be subjected to a total load, which represents 60 % of the design moment resistance, calculated using the actual yield strength from the batch test certificate of conformity or the actual measured value.

The actual load applied shall be the calculated total load less the dead weight of the beam, concrete topping, and fire protection system.

The method of loading shall be by a system which will produce a bending moment that is uniform over at least 20 % of the span of the beam around mid-span. The small increase in applied moment between jacks due to the cover slab may be ignored.

Loading shall be uniformly and symmetrically applied at two or more locations along its length.

The loading shall be applied using either of the two methods described in Figure 1.

The ends of loaded beams outside the furnace shall be insulated with a suitable insulation material.

© ISO 2014 – All rights reserved
Documents
Document Sharing Hub
Full document details: BS ISO 834-10:2014

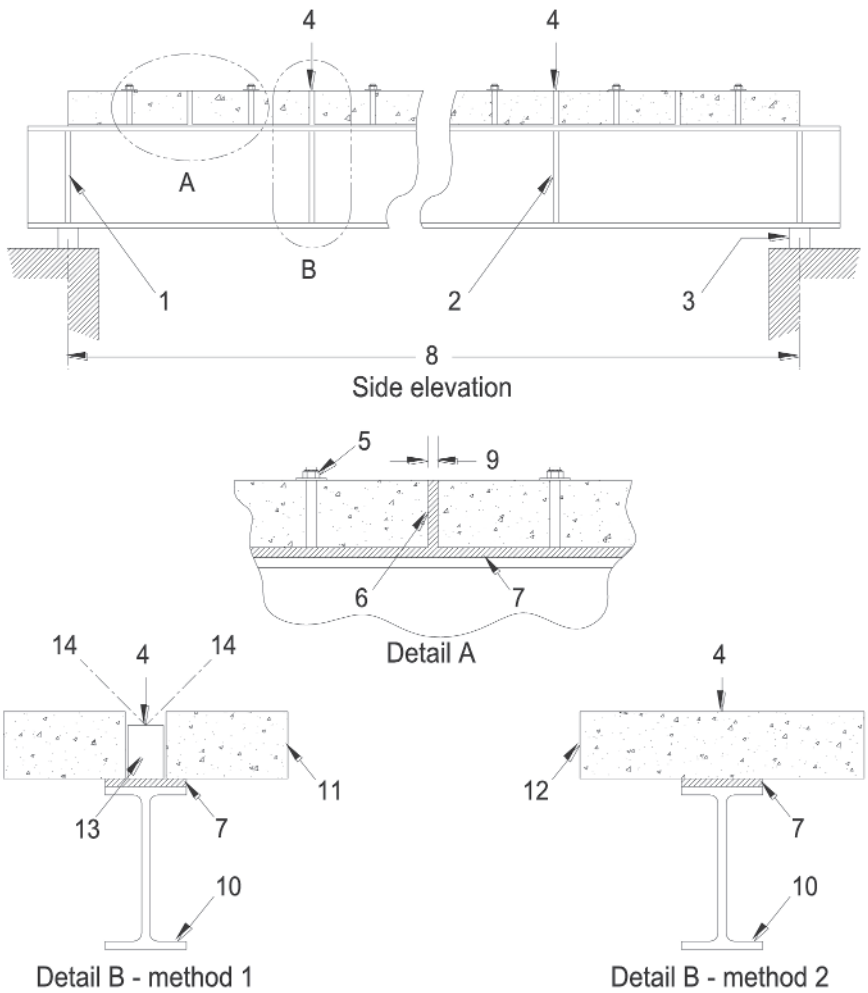

Key

A detail A - fixing of beam topping
B detail B – beam loading method 1 or 2
1 web stiffener at end bearing – I or H section
2 web stiffener at load points – I or H section
3 provide sufficient clearance to ensure furnace lining does not interfere with protection
4 load applied centrally to top of beam via load spacer 13 or to concrete slab 12
5 stud/plate/locking nut
6 fibre insulation or equivalent
7 compressible fibre insulation to width of beam (see 7.1)
8 span
9 gap to be sufficient to ensure beam is able to bend without being restricted by the slab
10 steel beam – I section shown, hollow beam similar
11 aerated concrete slab sections of nominal density 500 kg/m3 retained as in 7.1; nominal size of slabs 600 mm (±100 mm) width × 625 mm maximum length × 150 mm to 200 mm thick
12 lightweight concrete slab section of nominal density 1500 kg/m3 retained as in 7.1; nominal size of slabs as 11
13 load spacer
14 additional bracing to prevent rotation of beam if necessary

Figure 1 — Construction arrangement options for loaded beams

© ISO 2014 – All rights reserved

Documents
Document Sharing Hub
Full document details: BS ISO 834-10:2014

6.2.3 Unloaded beams

Each unloaded beam test specimen shall be supported as shown in Figure 2.

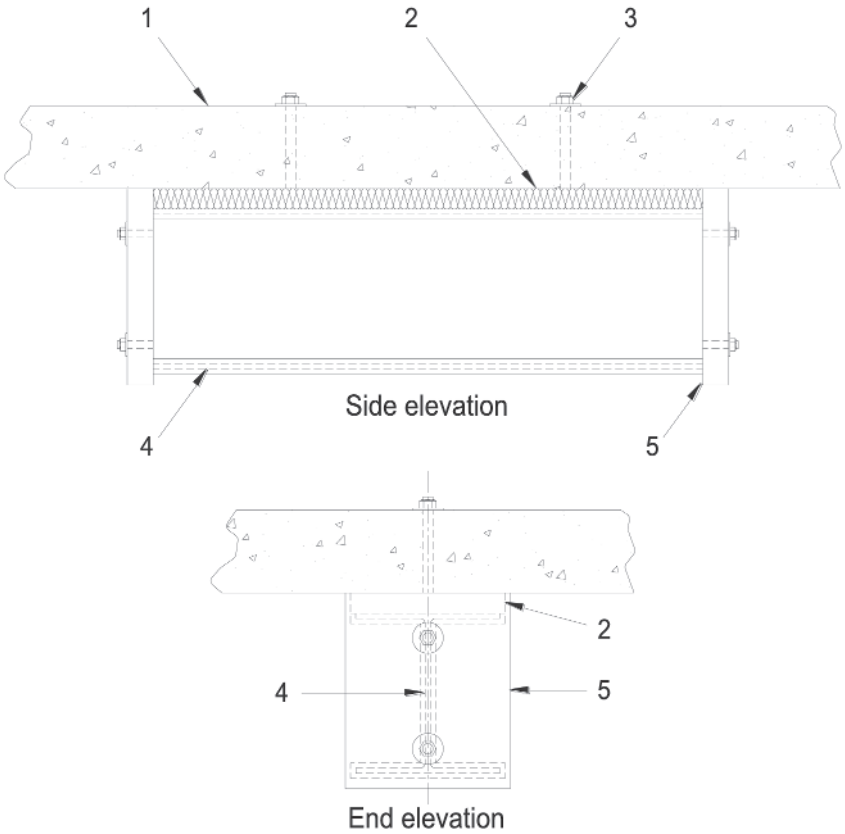

Key

1 furnace cover
2 insulation board
3 stud/plate/locking nut
4 steel section
5 insulation board – end cap

Figure 2 — Support arrangement for unloaded beams

6.2.4 Loaded columns

For each loaded column, provision shall be made for the proper support, positioning, and alignment of the column test specimen in the furnace in accordance with ISO 834-7 subject to any amended or additional requirements of this part of ISO 834. An example of the test arrangement is given in Figure 3.

© ISO 2014 – All rights reserved
Documents
Document Sharing Hub
Full document details: BS ISO 834-10:2014

Dimensions in millimetres

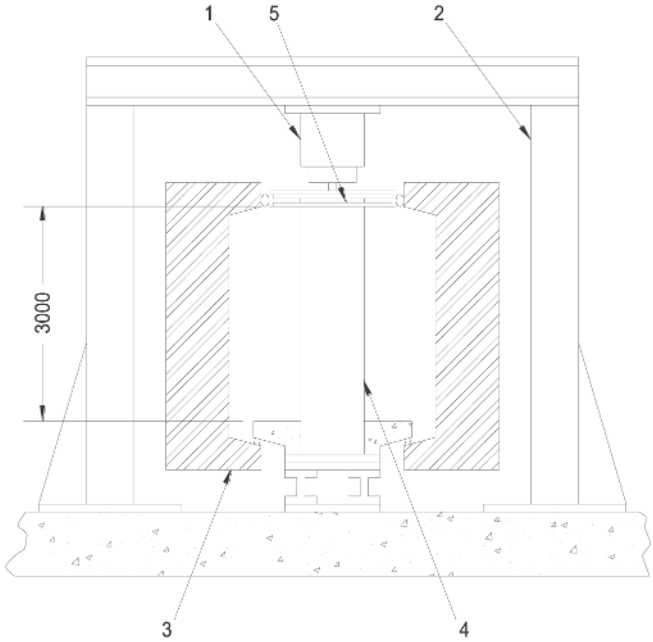

Key

1 hydraulic jack
2 loading frame
3 furnace
4 loaded column
5 steel plate (only applies to reactive coatings)

Figure 3 — Loaded columns, example of general test arrangement

The loaded column shall be subjected to an applied test load which represents 60 % of the design buckling resistance calculated using the actual yield strength from the batch certificate of conformity or an actual measured value. Details of the calculation made to define the test load shall be included in the test report.

6.2.5 Unloaded columns

Unloaded column sections shall be supported vertically within the furnace; either installed to the soffit of the furnace cover slabs (see Figure 4) or stood directly on the furnace floor or on plinths (see Figure 5).

© ISO 2014 – All rights reserved

Documents
Document Sharing Hub
Full document details: BS ISO 834-10:2014

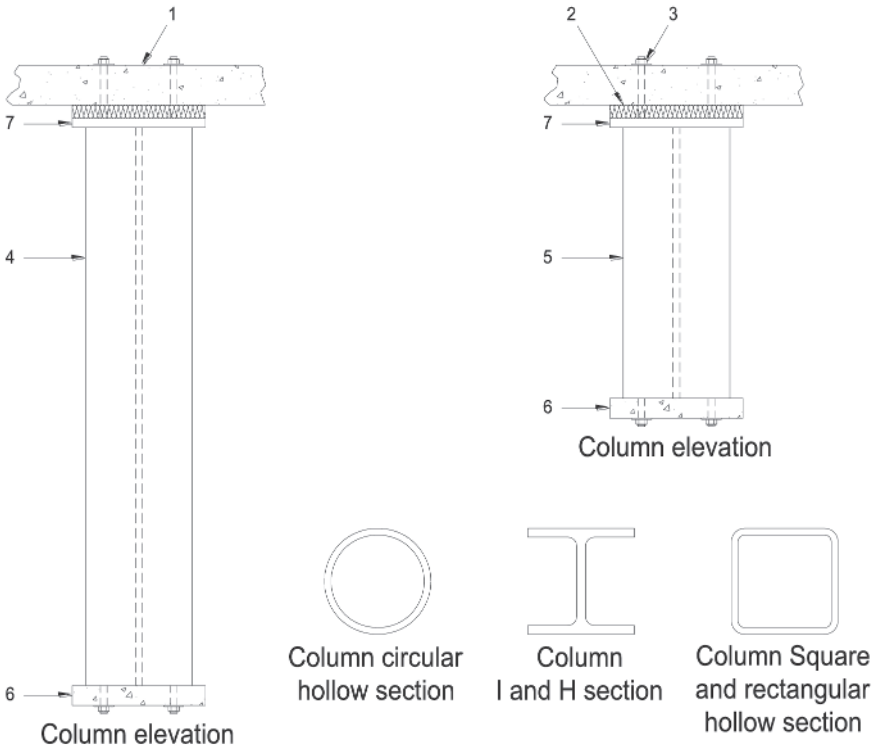

Key

1 furnace cover

2 insulation board

3 stud/plate/locking nut

4 tall column

5 short column

6 insulation board – end cap

7 steel plate (see Figure 7) to be applied to all columns with reactive protection systems whether situated on the floor or fixed to the furnace roof (steel plates are not used with passive protection systems)

Figure 4 — Support arrangement for unloaded columns

© ISO 2014 – All rights reserved
Documents
Document Sharing Hub
Full document details: BS ISO 834-10:2014

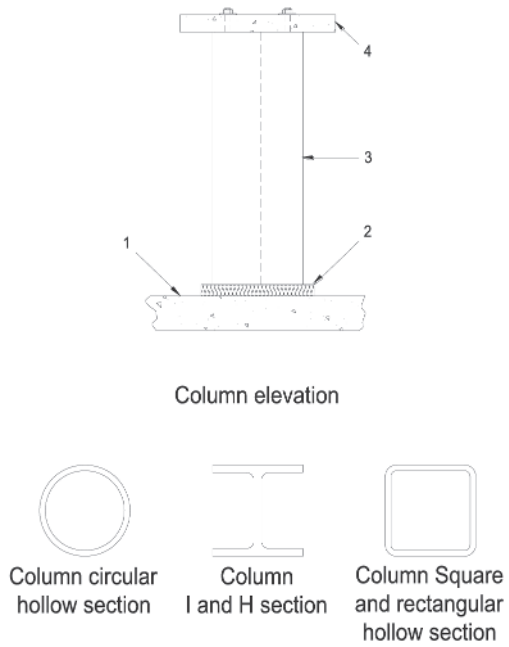

Key

1 furnace floor or plinth

2 insulation material sufficient to prevent heat transfer via end of section

3 short column

4 insulation board – end cap

Figure 5 — Installation of unloaded column on the furnace floor or on a plinth

When unloaded columns are tested simultaneously with beams, the columns shall be bolted to the underside of the furnace cover slab or stood on plinths or the furnace floor. When unloaded columns are tested simultaneously with a loaded column, the columns shall be stood on plinths or directly on the furnace floor.

7 Test specimens

7.1 General

The test sections should be chosen to suit the scope of the intended assessment and will include both loaded and unloaded sections. The testing of loaded tall and equivalent unloaded reference sections provides the basis for the stickability correction to be applied to the thermal data generated from the unloaded short sections

Depending upon the scope of the assessment, the principle of selecting the loaded and unloaded sections shall be based on the details presented in 7.4.

Whenever possible, for each test involving a loaded beam or column, an equivalent unloaded reference beam or column section respectively shall be included and tested in the furnace at the same time. Where it is not possible to test a loaded column and a reference column together in the furnace, then the reference section shall be tested separately in the same furnace in the same position as the loaded column. In the case of hollow sections protected with a reactive protection system, it shall be necessary to do this for both circular and rectangular columns.

For both the maximum and the minimum thickness of the fire protection system, a loaded beam shall be tested to examine stickability during maximum deflection of the steel section, up to a maximum anticipated steel temperature. The two loaded steel beams do not have to be the same sizes as each other.

© ISO 2014 – All rights reserved

AVA Documents Document Sharing Hub
Full document details: BS ISO 834-10:2014

If the assessment is to be confined to four-sided protection of columns, the loaded beam tests shall be replaced by loaded column tests. In this case, the unloaded reference beam sections shall be replaced by unloaded reference column sections.

The data from the loaded and equivalent unloaded reference sections shall be used to determine the correction factor for stickability across the range of fire protection thickness.

For passive protection systems, it shall be necessary to consider loaded tests on both beams and columns if the supporting systems are different for each type of structural element. In the case of stapled board systems, the above rule applies only to the minimum thickness tested with staples.

7.2 Specimen design and preparation

7.2.1 Loaded beam sections

Loaded beam test sections shall have an I or H cross-sectional shape or hollow rectangular section.

Steel test sections used in loaded beam tests shall be constructed according to Figure 6 and tested in accordance with ISO 834-6 subject to any amendments given in this part of ISO 834.

Each beam shall have a total length, which provides an exposed length for heating, of not less than 4 000 mm.

The supported length and specimen length shall be specified as follows:

The span between the supports (L_{sup}) shall be the exposed length plus up to a maximum of 400 mm at each end. The length of the specimen (L_{spec}) shall be the exposed length plus up to a maximum of 500 mm at each end (see Figure 6).

The additional length, required for installation purposes, shall be kept as small as practically possible.

Where the span of these beams is such that additional restraint is required, provide web stiffeners as follows subject to agreement with the sponsor and as reported:

To give web stiffness and torsional restraint, the beams may be provided with

a) web stiffeners in the form of steel plates or triangular gussets, welded at each loading point; these shall have a thickness at least equal to the thickness of the web and a depth of at least 10 mm less than the depth of the beam flange (details are shown in Figure 6) and

b) web stiffeners in the form of steel plates or channels, welded at each support point; these shall have thickness at least equal to the thickness of the web; web stiffeners comprising steel plates shall be trapezoidal in shape to provide additional torsional restraint (details are shown in Figure 6).

© ISO 2014 – All rights reserved
Documents
Document Sharing Hub
Full document details: BS ISO 834-10:2014

Dimensions in millimetres

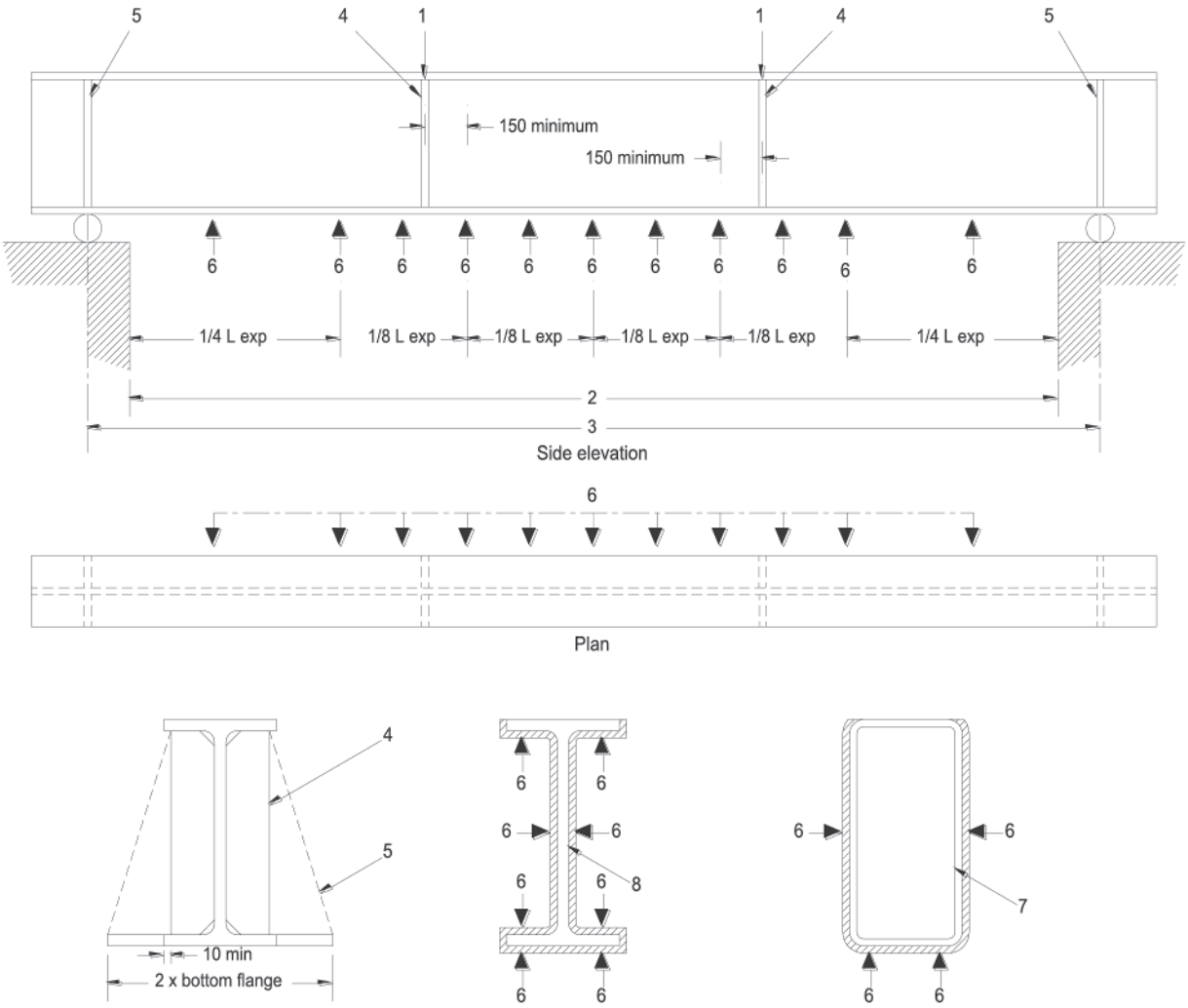

Key

1 load
2 exposed length, L_{exp}
3 span
4 web stiffener at load points if required – I or H section
5 web stiffener at bearing positions if required – I or H section
6 measuring points for sprayed coating
7 hollow section beam
8 I or H section

Figure 6 — Construction of loaded beam with web stiffeners and thickness measuring points

7.2.2 Unloaded beam sections

Steel sections used in unloaded beam test shall be constructed according to Figure 2.

The minimum length of unloaded short beam sections shall be 1 000 mm ± 50 mm. For board systems, joints in the protection should not be included unless the maximum board length is less than 1 000 mm

© ISO 2014 – All rights reserved

Documents
Document Sharing Hub
Full document details: BS ISO 834-10:2014

To minimize heat transfer at the ends of the unloaded beams, the ends shall be protected with insulation board or similar, which at elevated temperatures is capable of providing equivalent or greater insulation than that of the fire protection material provided over the length of the test specimen (see Figure 2).

The size of the end protection shall be greater than the total overall dimensions of the fire protection.

7.2.3 Unloaded reference sections

Where practical, each unloaded reference test section shall be taken from the same length of steel as its equivalent loaded section, thereby ensuring that it is of the same dimensions and characteristics. If this cannot be achieved, the test laboratory should ensure that the reference section is of similar dimensions and characteristics.

The minimum length of short beams and columns used as reference sections shall be 1 000 mm ± 50 mm. For board systems, joints in the protection should not be included unless the maximum board length is less than 1 000 mm.

7.2.4 Loaded column sections

A loaded column test specimen shall have a minimum height exposed to heating of 3 000 mm and be prepared as shown in Figure 3 and described in ISO 834-7.

7.2.5 Unloaded tall column sections

Unloaded tall column sections shall have a height of 2 000 mm ± 50 mm and be constructed according to Figure 4.

7.2.6 Unloaded short column sections

Short steel column test sections shall be constructed according to Figures 4 and 5.

The minimum length of unloaded short column sections shall be 1 000 mm ± 50 mm. For board systems, joints in the protection should not be included unless the maximum board length is less than 1 000 mm.

Short columns may be tested on the floor of the furnace or suspended from the ceiling or on plinths.

To minimize heat transfer from the ends of short steel column sections, the ends shall be protected with insulation board or similar which, at elevated temperatures, is capable of providing equivalent or greater insulation performance than the fire protection material provided over the height of the column.

The size of the end protection shall be greater than the total overall dimensions of the fire protection (see Figure 4).

7.2.7 Loaded tall and short column sections – upper plate (reactive fire protection)

In order that the thermal insulation performance of an intumescent coating applied to a tall column may be accurately determined, the top edge of the column undergoing the test shall be adequately insulated to prevent inappropriate heat transfer to the section at this location

A 6-mm steel plate shall be fixed directly to the top edge of the unloaded columns at a distance of 3 m from the base of the loaded column. The plate shall be welded to the section and coated with the reactive material to all exposed areas (except the top face) to a thickness similar to that applied to the main section. The upper edge of the plate shall be protected with an insulation board or similar, which at elevated temperatures, is capable of providing equivalent or greater insulation than that of the fire protection.

This arrangement should allow the intumescent char to form in a more realistic manner and prevent false temperature data being recorded in this critical area. Figure 7 shows the details.

© ISO 2014 – All rights reserved
Documents
Document Sharing Hub
Full document details: BS ISO 834-10:2014