BS ISO 8636-2:2024

BSI Standards Publication

Machine tools — Test conditions for bridge-type milling machines

Part 2: Testing of the accuracy of travelling bridge (gantry-type) machines

Documents
Document Sharing Hub

Full document details: BS ISO 8636-2:2024

National foreword

This British Standard is the UK implementation of ISO 8636-2:2024. It supersedes BS ISO 8636-2:2007, which is withdrawn.

The UK participation in its preparation was entrusted to Technical Committee MTE/1/2, Machine tools - Accuracy.

A list of organizations represented on this committee can be obtained on request to its committee manager.

Contractual and legal considerations

This publication has been prepared in good faith, however no representation, warranty, assurance or undertaking (express or implied) is or will be made, and no responsibility or liability is or will be accepted by BSI in relation to the adequacy, accuracy, completeness or reasonableness of this publication. All and any such responsibility and liability is expressly disclaimed to the full extent permitted by the law.

This publication is provided as is, and is to be used at the recipient's own risk.

The recipient is advised to consider seeking professional guidance with respect to its use of this publication.

This publication is not intended to constitute a contract. Users are responsible for its correct application.

© The British Standards Institution 2024
Published by BSI Standards Limited 2024

ISBN 978 0 539 18196 8

ICS 25.080.20

Compliance with a British Standard cannot confer immunity from legal obligations.

This British Standard was published under the authority of the Standards Policy and Strategy Committee on 30 September 2024.

Amendments/corrigenda issued since publication

Date	Text affected

Documents
Document Sharing Hub

Full document details: BS ISO 8636-2:2024

International Standard

ISO 8636-2

Third edition
2024-09

Machine tools — Test conditions for bridge-type milling machines —

Part 2: Testing of the accuracy of travelling bridge (gantry-type) machines

Machines-outils — Conditions d'essai des machines à fraiser à portique —

Partie 2: Contrôle de l'exactitude des machines à portique mobile

Reference number
ISO 8636-2:2024(en)

© ISO 2024

Documents
Document Sharing Hub

Full document details: BS ISO 8636-2:2024

COPYRIGHT PROTECTED DOCUMENT

© ISO 2024

All rights reserved. Unless otherwise specified, or required in the context of its implementation, no part of this publication may be reproduced or utilized otherwise in any form or by any means, electronic or mechanical, including photocopying, or posting on the internet or an intranet, without prior written permission. Permission can be requested from either ISO at the address below or ISO's member body in the country of the requester.

ISO copyright office
CP 401 • Ch. de Blandonnet 8
CH-1214 Vernier, Geneva
Phone: +41 22 749 01 11
Email: copyright@iso.org
Website: www.iso.org

Published in Switzerland

Documents
Document Sharing Hub
Full document details: BS ISO 8636-2:2024

Contents

Page

Foreword ... **iv**
Introduction ... **vi**
1 Scope ... **1**
2 Normative references ... **1**
3 Terms and definitions ... **1**
4 Classification and description of travelling bridge (gantry-type) milling machines ... **2**
4.1 Classification ... 2
4.2 Descriptions of the principal components ... 2
4.2.1 Bed and table ... 2
4.2.2 Columns, top bridge and cross-rail ... 4
4.2.3 Spindle head(s) ... 4
4.2.4 Movable cross-rail motion ... 4
5 Examples of machine tool components and designation of axes ... **4**
6 Preliminary remarks ... **5**
6.1 Measuring units ... 5
6.2 Reference to ISO 230-1, ISO 230-2 and ISO 230-7 ... 6
6.3 Machine levelling ... 6
6.4 Temperature conditions ... 6
6.5 Testing sequence ... 6
6.6 Tests to be performed ... 6
6.7 Measuring instruments ... 6
6.8 Software compensation ... 7
6.9 Minimum tolerance ... 7
6.10 Positioning tests ... 7
6.11 Diagrams ... 7
7 Geometric tests for axes of linear motion ... **8**
8 Geometric tests for the table ... **21**
9 Geometric tests for the rotary table ... **24**
10 Geometric tests for the vertical spindle head ... **26**
11 Geometric tests for the horizontal spindle head (side spindle head) ... **29**
12 Accuracy and repeatability of positioning of linear axes ... **32**
13 Accuracy and repeatability of positioning of the rotary table ... **42**
Annex A (informative) **Geometric accuracy of axes of rotation** ... **43**
Annex B (informative) **Terms in other languages for Figure 1** ... **47**
Bibliography ... **48**

© ISO 2024 – All rights reserved

Documents
Document Sharing Hub
Full document details: BS ISO 8636-2:2024

Foreword

ISO (the International Organization for Standardization) is a worldwide federation of national standards bodies (ISO member bodies). The work of preparing International Standards is normally carried out through ISO technical committees. Each member body interested in a subject for which a technical committee has been established has the right to be represented on that committee. International organizations, governmental and non-governmental, in liaison with ISO, also take part in the work. ISO collaborates closely with the International Electrotechnical Commission (IEC) on all matters of electrotechnical standardization.

The procedures used to develop this document and those intended for its further maintenance are described in the ISO/IEC Directives, Part 1. In particular, the different approval criteria needed for the different types of ISO document should be noted. This document was drafted in accordance with the editorial rules of the ISO/IEC Directives, Part 2 (see www.iso.org/directives).

ISO draws attention to the possibility that the implementation of this document may involve the use of (a) patent(s). ISO takes no position concerning the evidence, validity or applicability of any claimed patent rights in respect thereof. As of the date of publication of this document, ISO had not received notice of (a) patent(s) which may be required to implement this document. However, implementers are cautioned that this may not represent the latest information, which may be obtained from the patent database available at www.iso.org/patents. ISO shall not be held responsible for identifying any or all such patent rights.

Any trade name used in this document is information given for the convenience of users and does not constitute an endorsement.

For an explanation of the voluntary nature of standards, the meaning of ISO specific terms and expressions related to conformity assessment, as well as information about ISO's adherence to the World Trade Organization (WTO) principles in the Technical Barriers to Trade (TBT), see www.iso.org/iso/foreword.html.

This document was prepared by Technical ISO/TC 39, *Machine tools*, Subcommittee SC 2, *Test conditions for metal cutting machine tools*.

This third edition cancels and replaces the second edition (ISO 8632-2:2007), which has been technically revised.

The main changes are as follows:

— the references in the Observations section of test tables have been updated to ISO 230-1:2012;

— the terminology and designation of axes have been revised to better represent current technology;

— preliminary remarks subclauses have been revised to be consistent with the latest revisions of machine-tool specific standards;

— tolerances for tests related to long axes (with travel lengths greater than 5 000 mm) have been introduced;

— tests for straightness and angular errors of Z-axis motion have been added;

— tests for straightness and angular errors of cross-rail W-axis motion have been added;

— tests for rotary table, C'-axis, have been added;

— tests for geometric accuracy of axis of rotation have been moved to Annex A;

— machining tests have been excluded considering that such tests can typically be the object of agreement between the manufacturer/supplier and the user, (possibly) including tests that are specified in ISO 10791-7;

— the test for table flatness (former G9) has been deleted because the table surface is not normally used as a reference for the orientation of the workpiece, and, for tests made during the working life of the machine tool, the surface can be unsuitable for accurate measurements on these large machine tools;

© ISO 2024 – All rights reserved

Documents
Document Sharing Hub
Full document details: BS ISO 8636-2:2024

— the tests for swivelling spindle heads (former G15 and P7) have been deleted as such heads are not in the scope of this document; they will be considered in a future standard.

A list of all parts in the ISO 8636 series can be found on the ISO website.

Any feedback or questions on this document should be directed to the user's national standards body. A complete listing of these bodies can be found at www.iso.org/members.html.

© ISO 2024 – All rights reserved

Documents
Document Sharing Hub
Full document details: BS ISO 8636-2:2024

Introduction

A bridge-type milling machine is a numerically controlled machine tool capable of performing multiple machining operations, including milling, boring, drilling and tapping, as well as automatic tool changing from a tool magazine or similar storage unit according to a machining program. Its main difference from the typical vertical machining centre, dealt with in ISO 10791-2, is in the size (the X-axis is longer than 5 m) and its typical configuration is based on the following features:

— a large fixed table where large workpieces can be located;

— all motions along the three coordinate axes belong to the tool, in the following order:

  — a vertical slide or ram moves vertically along the Z-axis.

  — a horizontal slide moves on the cross-rail along the Y-axis;

  — the travelling bridge moves on the bed along the X-axis.

Common configurations of the gantry machine tool are:

— the travelling bridge can be a complete portal made by two columns, moving on slideways on the floor level, connected by a top-bridge, where

  — the top-bridge can be fixed and used as cross-rail, or

  — the top-bridge can be fixed and the cross-rail can be movable on vertical slideways on the columns, as a vertical motion additional to the Z-axis;

— the travelling bridge can be made by a simple cross-rail, moving on horizontal slideways placed on top of tall fixed columns, often a multiple modular structure which can be assembled up to the required X-axis length.

An additional feature of the gantry machine tool can be a large rotary table, usually located at one end of the workholding table, to be used for turning operations on large workpieces. In this case, the gantry machine with rotary table becomes very similar to a vertical lathe with moving gantry, with the following differences:

— if the machine is designed and intended to be a bridge-type milling machine with additional rotary table, the gantry motion on the bed is called X-axis, the horizontal slide motion on the cross-rail is called Y-axis and the relevant geometric tests are considered in this document;

— if the machine is designed and intended to be a vertical lathe with additional gantry motion, the horizontal slide motion on the cross-rail is called X-axis, the gantry motion on the bed is called Y-axis and the relevant geometric tests are considered in ISO 13041-2.

The object of this document is to supply information as wide and comprehensive as possible on tests which can be carried out for comparison, acceptance, maintenance or any other purpose deemed necessary by the user or by the manufacturer/supplier.

© ISO 2024 – All rights reserved

Documents
Document Sharing Hub
Full document details: BS ISO 8636-2:2024

Machine tools — Test conditions for bridge-type milling machines —

Part 2: Testing of the accuracy of travelling bridge (gantry-type) machines

1 Scope

This document specifies, with reference to ISO 230-1, ISO 230-2 and ISO 230-7, geometric tests and tests to check the accuracy and repeatability of positioning of numerically controlled axes for general-purpose, normal accuracy bridge-type milling machines with a travelling bridge (gantry-type). This document also specifies the applicable tolerances corresponding to the above-mentioned tests.

This document provides the terminology used for the identification of the principal components of the relevant machine tools and the designation of axes with reference to ISO 841.

This document is applicable to machine tools with travelling bridge and fixed table. This document does not include single-column (open-sided) machine tools and those with fixed bridge and moving table.

This document deals only with the verification of the accuracy of the machine tool. This document does not apply to the testing of the machine tool operation (vibration, abnormal noise, stick-slip motion of components, etc.) nor to machine tool characteristics (such as speeds and feeds), which are generally checked before testing the accuracy.

2 Normative references

The following documents are referred to in the text in such a way that some or all of their content constitutes requirements of this document. For dated references, only the edition cited applies. For undated references, the latest edition of the referenced document (including any amendments) applies.

ISO 230-1:2012, *Test code for machine tools — Part 1: Geometric accuracy of machines operating under no-load or quasi-static conditions*

ISO 230-2:2014, *Test code for machine tools — Part 2: Determination of accuracy and repeatability of positioning of numerically controlled axes*

ISO 230-7:2015, *Test code for machine tools — Part 7: Geometric accuracy of axes of rotation*

3 Terms and definitions

For the purposes of this document, the terms and definitions given in ISO 230-1, ISO 230-2, ISO 230-7 and the following apply.

ISO and IEC maintain terminology databases for use in standardization at the following addresses:

— ISO Online browsing platform: available at https://www.iso.org/obp

— IEC Electropedia: available at https://www.electropedia.org/

© ISO 2024 – All rights reserved

Documents
Document Sharing Hub
Full document details: BS ISO 8636-2:2024

3.1
travelling bridge (gantry-type) milling machine
milling machine with one fixed workpiece-holding table, two slideways on two beds on either side of the table and a travelling bridge (gantry) on which the spindle head(s) are mounted

Note 1 to entry: The beds can be dependent or independent of the table and can be supported by fixed columns [see Figure 1 a) and Figure 1 b)].

Note 2 to entry: The gantry, composed of a left-hand column and a right-hand column supported by respective column slides and made integral with a fixed top bridge, is moved along the bed slideways. The gantry supports a horizontal cross-rail, movable or fixed in the vertical plane, on which one or more spindle heads are mounted with vertical spindles.

Note 3 to entry: Some gantry-type milling machines are equipped with a rotary table [see Figure 1 b)].

4 Classification and description of travelling bridge (gantry-type) milling machines

4.1 Classification

These machine tools are classified into the following types depending upon construction:

— travelling bridge (gantry-type) milling machines with a cross-rail movable along the Z-(W-) axis [see Figure 1 a)];

— travelling bridge (gantry-type) milling machines with a cross-rail fixed along the Z-axis [see Figure 1 b)].

The principal components of these machines are shown in Figure 1 and described in 4.2.

4.2 Descriptions of the principal components

4.2.1 Bed and table

The table (Figure 1 Key 1) is located between two slideways that form the bed (Figure 1 Key 2). The table and the slideways can be constructed in one piece. Alternatively, the assembly can be made of several pieces rigidly connected through the foundation or directly to each other.

NOTE 1 The table can be replaced by a floorplate.

NOTE 2 A rotary table (Figure 1 Key 18) can be incorporated in the worktable.

© ISO 2024 – All rights reserved

Documents
Document Sharing Hub
Full document details: BS ISO 8636-2:2024

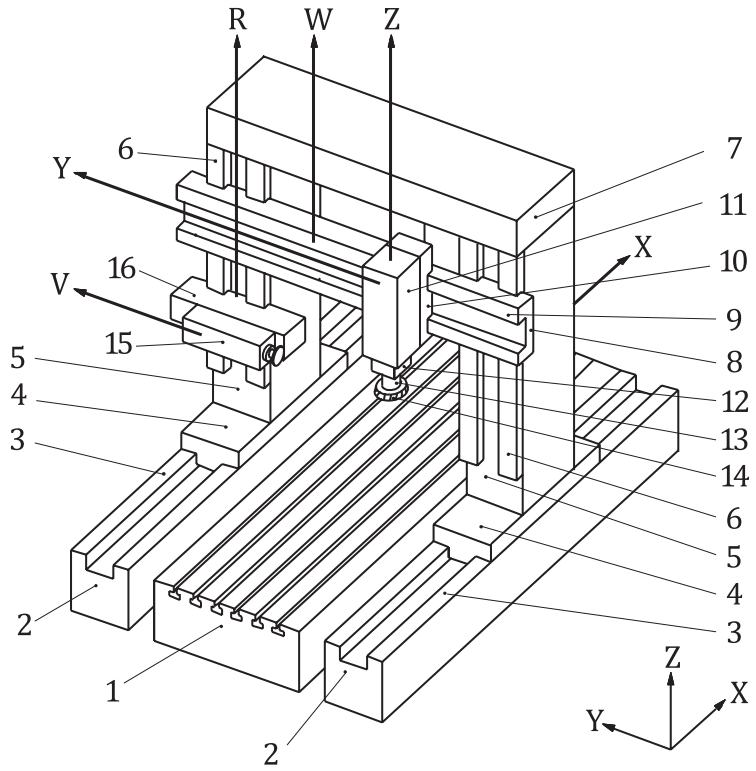

a) Bridge-type milling machine with a cross-rail movable along the W-axis

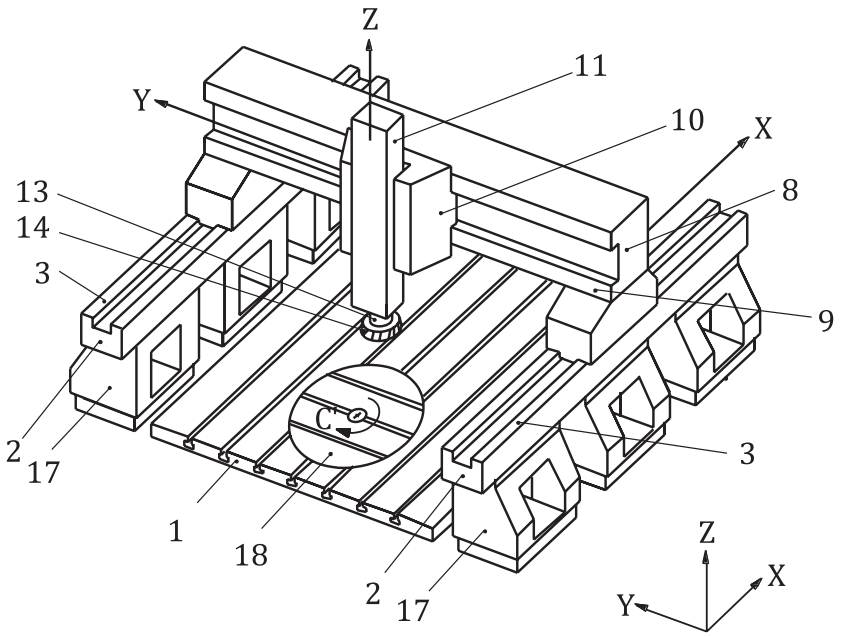

b) Bridge-type milling machine with a fixed cross-rail and X-axis beds supported by fixed columns

Key

1	table (or floorplate)	9	cross-rail slideways	17	fixed columns
2	bed	10	vertical head saddle	18	rotary table (C'-axis)
3	bed slideways	11	vertical spindle head	R	vertical motion of the side spindle head (R-axis)
4	column slide	12	quill (ram)	V	horizontal motion of the side spindle head (V-axis)
5	column	13	tool-holding spindle	W	movable cross-rail vertical motion (W-axis)
6	column slideways	14	tool (milling cutter)	X	X-axis

© ISO 2024 – All rights reserved

Documents
Document Sharing Hub
Full document details: BS ISO 8636-2:2024

7	top bridge	15	horizontal spindle head	Y	Y-axis
8	movable or fixed cross-rail	16	column head saddle	Z	Z-axis

NOTE For terms in French, German, Italian, Japanese and Persian, see Annex B.

Figure 1 — Travelling bridge (gantry-type) machine tools with movable and fixed cross-rail

4.2.2 Columns, top bridge and cross-rail

With reference to Figure 1 a), columns (Figure 1 Key 5) are rigid parts with vertical slideways, which either slide on the bed or are rigidly fixed to column slides (Figure 1 Key 4) which slide horizontally on the beds.

The top bridge (Figure 1 Key 7) is a fixed part connecting the two columns near their top ends.

The cross-rail (Figure 1 Key 8) is a part whose horizontal slideways are parallel to the plane of the table. In the case of machines with fixed cross-rails, the cross-rail is made integral with the columns and can be used as a top bridge. In the case of machines with movable cross-rails, the cross-rail slides vertically on the columns´ slideways (Figure 1 Key 6).

With reference to Figure 1 b), the cross-rail is not moving along the W-axis. Cross-rail and top bridge (Figure 1 Key 8) are one-piece, not mounted on columns, but sliding directly along the X-axis, on horizontal slideways mounted on multiple fixed columns.

4.2.3 Spindle head(s)

One or more spindle heads with vertical or horizontal spindles are mounted on the cross-rail slideways.

The portion in direct contact with the cross-rail slideways is called the head saddle (Figure 1 Keys 10 and 16).

Spindle heads (Figure 1 Keys 11 and 15) are mounted on head saddles (Figure 1 Keys 10 and 16) which move on the cross-rail or column slideways.

The vertical spindle head can slide vertically on the head saddle; it is then called a ram. The spindle can be mounted in a quill (Figure 1 Key 12) sliding vertically in the spindle head. Integral or universal spindle heads can be applied on the bottom of the spindle head or ram.

4.2.4 Movable cross-rail motion

The vertical motion of the movable cross-rail can be either a feed motion (in which case, the cross-rail is said to be movable when working) or a movement between fixed working positions (the cross-rail is then said to be movable when being positioned).

5 Examples of machine tool components and designation of axes

See Figure 1 for a comprehensive illustration of machine components.

See Figures 1 to 3 for the designation of axes.

© ISO 2024 – All rights reserved

Documents
Document Sharing Hub
Full document details: BS ISO 8636-2:2024

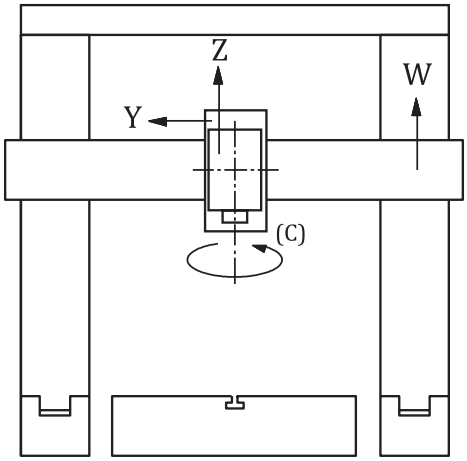

Figure 2 — Example of a machine tool with one spindle head

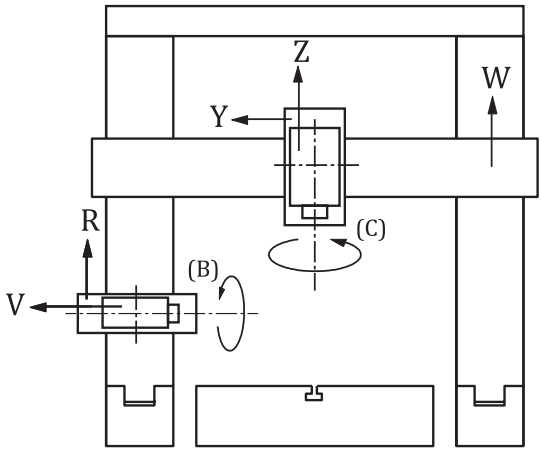

a) One vertical spindle head mounted on the cross-rail and one horizontal spindle head mounted on the left-hand column

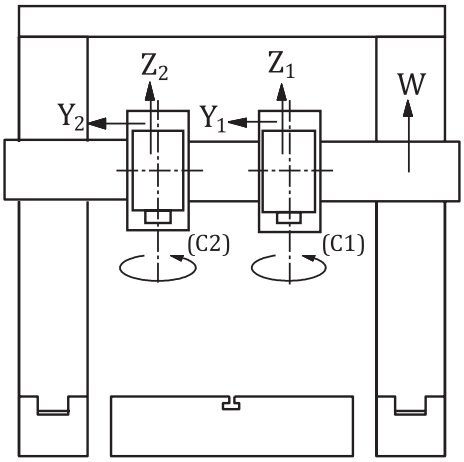

b) Two vertical spindle heads mounted on the cross-rail

Figure 3 — Examples of machine tools with two spindle heads

6 Preliminary remarks

6.1 Measuring units

In this document, all linear dimensions, deviations, errors and corresponding tolerances are expressed in millimetres; angular dimensions are expressed in degrees and angular errors, and the corresponding tolerances are primarily expressed in ratios (e.g. 0,010/1 000), but in some cases microradians (µrad) or arcseconds (″) are used for clarification purposes. Formula (1) should be used for the conversion of the units of angular errors or tolerances:

$$0{,}010/1\,000 = 10\ \mu\text{rad} \approx 2'' \qquad (1)$$

© ISO 2024 – All rights reserved

Documents
Document Sharing Hub
Full document details: BS ISO 8636-2:2024

6.2 Reference to ISO 230-1, ISO 230-2 and ISO 230-7

To apply this document, reference shall be made to ISO 230-1, ISO 230-2 and ISO 230-7 when required, especially for the installation of the machine before testing, the warm up of the spindle(s) and other moving components, the measuring methods and recommended accuracies of testing equipment.

In the "Observations" box of the tests described in Clauses 7 to 13, the instructions are preceded by a reference to the corresponding clause in ISO 230-1, ISO 230-2 or ISO 230-7 in cases where the test concerned is in compliance with the specifications of one of those parts of the ISO 230 series.

6.3 Machine levelling

Prior to conducting tests on a machine tool, the machine tool should be levelled according to the recommendations of the supplier/manufacturer (see ISO 230-1:2012, 6.1).

6.4 Temperature conditions

The temperature conditions throughout the tests shall be specified by agreement between the manufacturer/supplier and the user.

6.5 Testing sequence

The sequence in which the tests are presented in this document does not define the practical order of testing. In order to facilitate the mounting of instruments or measuring, tests may be performed in any order.

6.6 Tests to be performed

When testing a machine, it is not always necessary nor possible to carry out all the tests described in this document. If the tests are required for acceptance purposes, it is the responsibility of the user to choose, in agreement with the supplier/manufacturer, those tests relating to the components and/or the properties of the machine which are of interest. ISO 230-1:2012, Annex A provides valuable information about selection of primary and secondary axes and associated tests. These tests shall be clearly stated when ordering a machine. Simple reference to this document for the acceptance tests, without specifying the tests to be carried out, and without agreement on the relevant expenses, cannot be considered as binding for any contracting party.

6.7 Measuring instruments

Measuring instruments indicated in the tests described in Clauses 7 to 13 are examples only. Other instruments capable of measuring the same quantities and having the same, or a smaller, measurement uncertainty can be used. Reference shall be made to ISO 230-1:2012, Clause 5, which indicates the relationship between measurement uncertainties and the tolerances.

When a "dial gauge" is referred to, it can mean not only dial test indicators (DTI), but any type of linear displacement sensor, such as analog or digital dial gauges, linear variable differential transformer (LVDTs), linear scale displacement gauges or non-contact sensors, when applicable to the test concerned.

Similarly, when a "straightedge" is referred to, it can mean any type of straightness reference artefact, such as a granite or ceramic or steel or cast-iron straightedge, one arm of a square, one generating line on a cylindrical square, any straight path on a reference cube or a special, dedicated artefact manufactured to fit in the T-slots or other references.

In the same way, when a "square" is mentioned, it can mean any type of squareness reference artefact, such as a granite or ceramic or steel or cast-iron square, a cylindrical square, a reference cube, or, again, a special, dedicated artefact.

When a "precision level" is referred to, it can mean any type of level, such as bubble tube, digital and analogue electronic levels.

© ISO 2024 – All rights reserved

Documents
Document Sharing Hub
Full document details: BS ISO 8636-2:2024

Valuable information on measuring instruments is available in ISO/TR 230-11.

6.8 Software compensation

When built-in software facilities are available for compensating geometric, positioning, contouring and thermal deviations, their use during these tests should be based on agreement between the manufacturer/supplier and the user, with due consideration to the machine tool intended use, e.g. if the intended use of the machine tool is with or without software compensation for geometric errors. When the software compensation is used, this shall be stated in the test report. It shall be noted that when software compensation is used, some machine tool axes cannot be locked for test purposes.

Valuable information on numerical compensation of geometric errors is given in ISO/TR 16907.

6.9 Minimum tolerance

By mutual agreement, the manufacturer/supplier and the user can establish the tolerance for a measuring length different from that given in the tests described in Clauses 7 to 13. However, it should be considered that the recommended minimum value of tolerance is 0,005 mm, unless otherwise specified.

In specifying the minimum tolerance, measurement uncertainty associated with the test and the recommended instrument, shall be taken into account, see 6.7.

6.10 Positioning tests

Positioning tests for numerically controlled machine tools shall refer to ISO 230-2. Tolerances in this document are given only for some parameters. The presentation of the test results shall comply with ISO 230-2.

6.11 Diagrams

For reasons of simplicity, the diagrams in Clauses 7 to 13 and in Annex A illustrate only one type of machine.

Where applicable, the diagram box provides for each test a), b) and c) identified in the object box, a schematic representation of a possible test setup, including the identification of the relevant coordinate plane (e.g. XY, YZ, ZX).

© ISO 2024 – All rights reserved

Documents
Document Sharing Hub
Full document details: BS ISO 8636-2:2024

7 Geometric tests for axes of linear motion

Object | **G1**

Checking of the straightness of motion of the gantry (X-axis):
a) in the vertical ZX plane, E_{ZX};
b) in the horizontal XY plane, E_{YX}.

Diagram

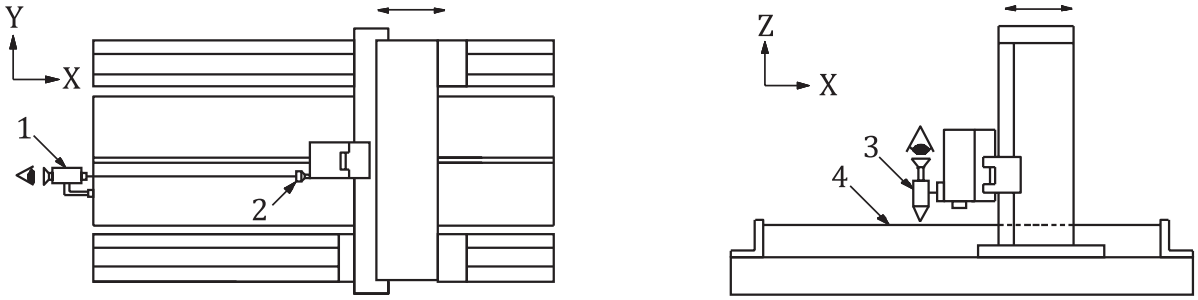

a) b)

Key

1 alignment telescope 2 telescope target 3 microscope 4 taut wire

Tolerance

	For a measuring length up to			
	5 000	10 000	15 000	20 000
For a) and b):	0,070	0,140	0,210	0,280

The local tolerance for a) and b) is 0,020 for any measuring length of 1 000.
For measuring lengths over 20 000, the tolerance shall be agreed between the manufacturer/supplier and the user.

Measurement results For a measuring length of:
a) b)

Measuring instruments

a) Straightness measurement optical instruments excluding microscope and taut wire.
b) Straightness measurement optical instruments including microscope and taut wire.

Observations and references to ISO 230-1:2012, 8.2.2.1, 8.2.2.2, 8.2.2.3 and 8.2.2.4

For a), taut wire is not recommended because of the sag of the wire.
The alignment telescope can be mounted on the workholding table such that the optical beam is parallel to the X-axis motion of the gantry, or the lack of parallelism shall be considered in the measurement.
If the spindle can be locked, the telescope target may be mounted on it. If the spindle cannot be locked, mount the telescope target on the spindle head.
For b), the microscope shall be fixed on the spindle, if it can be locked, or on the spindle head.
When optical instruments are used, it should be considered that, their measurement uncertainty for long measurement length can be higher than the measurement uncertainty of microscope and taut wire.
For a) and b), measurements shall be carried out on at least six positions along the travel, with equally spaced steps not exceeding 500. Traverse the gantry in the X-axis direction and note the readings.
Measurements shall be with Y-axis and Z-axis at their mid travel positions, otherwise, the measurement location shall be reported.

© ISO 2024 – All rights reserved

Documents
Document Sharing Hub
Full document details: BS ISO 8636-2:2024

Object | **G2**

Checking of the angular errors of the gantry motion (X-axis):
a) in the vertical ZX plane (E_{BX}: pitch);
b) in the vertical YZ plane (E_{AX}: roll);
c) in the horizontal XY plane (E_{CX}: yaw).

Diagram

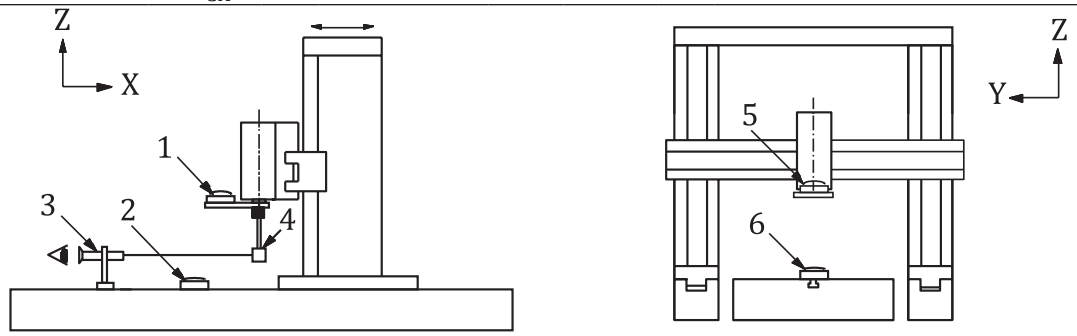

a) and c) b)

Key

1 measuring level for pitch	3 autocollimator for yaw/pitch	5 measuring level for roll
2 reference level for pitch	4 mirror for yaw/pitch	6 reference level for roll

Tolerance

	For measuring length up to			
	5 000	10 000	15 000	20 000
For a), b) and c)	0,060/1 000	0,070/1 000	0,080/1 000	0,100/1 000

The local tolerance for a), b) and c) is 0,020/1 000 for any measuring length of 1 000.

For measuring lengths over 20 000, the tolerance shall be agreed between the manufacturer/supplier and the user.

Measurement results	For a measuring length of:	
a)	b)	c)

Measuring instruments

a) Precision level or optical instruments.
b) Precision level.
c) Autocollimator or other optical instruments.

Observations and references to ISO 230-1:2012, 8.4.2.1, 8.4.2.2 and 8.4.2.3

The measuring level or the mirror shall be placed on the ram:

— for a), E_{BX} (pitch): in the X-axis direction;
— for b), E_{AX} (roll): in the Y-axis direction;
— for c) E_{CX} (yaw): set autocollimator horizontally in the X-axis direction.

If the X-axis motion causes angular deviation of both the spindle head and table, differential measurements of the two angular motions shall be taken.

For a), b) and c), measurements shall be carried out on at least six positions along the travel, with equally spaced steps not exceeding 500.

For a), b) and c), the angular error to be reported is the difference between the maximum and the minimum readings. The measurement location shall be reported.

© ISO 2024 – All rights reserved

Documents
Document Sharing Hub
Full document details: BS ISO 8636-2:2024

Object | **G3**

Checking of the straightness of the horizontal motion of the spindle head on the cross-rail (Y-axis):
a) in the horizontal XY plane, E_{XY};
b) in the vertical YZ plane, E_{ZY}.

Diagram

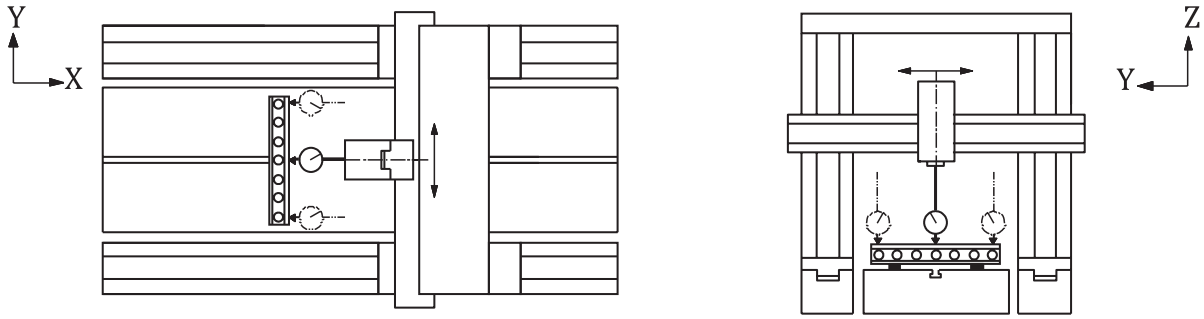

a) b)

Tolerance

	For measuring length up to			
	2 000	3 000	4 000	5 000
For a) and b)	0,030	0,040	0,050	0,060

The local tolerance for a) and b) is 0,015 for any measuring length of 800.

For measuring lengths over 5 000, the tolerance shall be agreed between the manufacturer/supplier and the user.

Measurement results For a measuring length of:

a) b)

Measuring instruments

Dial gauge, straightedge and gauge blocks or optical instruments.

Observations and references to ISO 230-1:2012, 8.2.2.1, 8.2.2.3, 8.2.2.4 and 8.2.2.5

Fix the movable cross-rail in the mid travel and move the gantry in mid travel.

Set a straightedge on the table, with the reference surface approximately parallel to the Y-axis: in the horizontal plane for a) and in the vertical plane for b).

If the spindle can be locked, the dial gauge may be mounted on it. If the spindle cannot be locked, the dial gauge shall be mounted on the ram.

Traverse the spindle head in the Y-direction through the measuring length and record the readings. The measuring length is normally the length between the two columns (not the full length of cross-rail). In other cases, this shall be agreed upon between the manufacturer/supplier and the user.

Measurements shall be carried out on at least six positions along the travel, with equally spaced steps not exceeding 400.

© ISO 2024 – All rights reserved

Documents
Document Sharing Hub
Full document details: BS ISO 8636-2:2024