BS ISO 8855:2011

BSI Standards Publication

Road vehicles — Vehicle dynamics and road-holding ability — Vocabulary

bsi.

...making excellence a habit.™

Document Sharing Hub

National foreword

This British Standard is the UK implementation of ISO 8855:2011. It supersedes BS AU 244:1992 which is withdrawn.

The UK participation in its preparation was entrusted to Technical Committee AUE/15, Safety related to vehicles.

A list of organizations represented on this committee can be obtained on request to its secretary.

This publication does not purport to include all the necessary provisions of a contract. Users are responsible for its correct application.

© The British Standards Institution 2012

ISBN 978 0 580 60623 6

ICS 01.040.43; 43.020

Compliance with a British Standard cannot confer immunity from legal obligations.

This British Standard was published under the authority of the Standards Policy and Strategy Committee on 31 January 2012.

Amendments issued since publication

Date	Text affected

Documents
Document Sharing Hub

Full document details: BS ISO 8855:2011

INTERNATIONAL STANDARD

ISO 8855

Second edition
2011-12-15

Road vehicles — Vehicle dynamics and road-holding ability — Vocabulary

Véhicules routiers — Dynamique des véhicules et tenue de route — Vocabulaire

Reference number
ISO 8855:2011(E)

Documents
Document Sharing Hub

© ISO 2011

Full document details: BS ISO 8855:2011

COPYRIGHT PROTECTED DOCUMENT

© ISO 2011

The reproduction of the terms and definitions contained in this International Standard is permitted in teaching manuals, instruction booklets, technical publications and journals for strictly educational or implementation purposes. The conditions for such reproduction are: that no modifications are made to the terms and definitions; that such reproduction is not permitted for dictionaries or similar publications offered for sale; and that this International Standard is referenced as the source document.

With the sole exceptions noted above, no other part of this publication may be reproduced or utilized in any form or by any means, electronic or mechanical, including photocopying and microfilm, without permission in writing from either ISO at the address below or ISO's member body in the country of the requester.

ISO copyright office
Case postale 56 • CH-1211 Geneva 20
Tel. + 41 22 749 01 11
Fax + 41 22 749 09 47
E-mail copyright@iso.org
Web www.iso.org

Published in Switzerland

Documents
Document Sharing Hub
© ISO 2011 – All rights reserved

Full document details: BS ISO 8855:2011

Contents

Page

Foreword iv

Introduction v

1 Scope 1

2 Axis system 1

3 Vehicle unit 5

4 Vehicle geometry and masses 6

5 Vehicle motion variables 8
5.1 Linear motion variables 8
5.2 Angular motion variables 10
5.3 Terms relating to vehicle trajectory measures 14

6 Forces and moments 15
6.1 Forces 15
6.2 Moments 16

7 Suspension and steering geometry 16
7.1 Steer and camber angles 16
7.2 Steering-axis geometry 20

8 Kinematics and compliances 23
8.1 Kinematics 23
8.2 Compliances 25

9 Ride and roll stiffness 25

10 Tyres 26
10.1 Tyre geometry 26
10.2 Tyre forces and moments 27
10.3 Terms relating to tyre measures 28

11 Input types and control modes 30
11.1 Input types 30
11.2 Control modes 30

12 Responses 31
12.1 General response types 31
12.2 Equilibrium and stability 31
12.3 Lateral response measures 32
12.4 Understeer and oversteer measures 33

Annex A (informative) **Comments on terms and definitions** 37

Bibliography 39

Alphabetical index 40

© ISO 2011 – All rights reserved

Documents
Document Sharing Hub
Full document details: BS ISO 8855:2011

Foreword

ISO (the International Organization for Standardization) is a worldwide federation of national standards bodies (ISO member bodies). The work of preparing International Standards is normally carried out through ISO technical committees. Each member body interested in a subject for which a technical committee has been established has the right to be represented on that committee. International organizations, governmental and non-governmental, in liaison with ISO, also take part in the work. ISO collaborates closely with the International Electrotechnical Commission (IEC) on all matters of electrotechnical standardization.

International Standards are drafted in accordance with the rules given in the ISO/IEC Directives, Part 2.

The main task of technical committees is to prepare International Standards. Draft International Standards adopted by the technical committees are circulated to the member bodies for voting. Publication as an International Standard requires approval by at least 75 % of the member bodies casting a vote.

Attention is drawn to the possibility that some of the elements of this document may be the subject of patent rights. ISO shall not be held responsible for identifying any or all such patent rights.

ISO 8855 was prepared by Technical Committee ISO/TC 22, *Road vehicles*, Subcommittee SC 9, *Vehicle dynamics and road-holding ability*.

This second edition cancels and replaces the first edition (ISO 8855:1991), which has been technically revised. It also incorporates the Addendum ISO 8855:1991/Add.1:1992.

© ISO 2011 – All rights reserved
Documents
Document Sharing Hub
Full document details: BS ISO 8855:2011

Introduction

This International Standard defines terms appertaining to road vehicle dynamics, principally for use by design, simulation and development engineers in the automotive industries. This second edition has been prepared in response to a requirement to update the first, and to harmonize its contents with that of the comparable standard published by SAE International (SAE J670:JAN2008). This revision extends the scope to include provision for separate tyre and wheel axis systems, inclined and non-uniform road surfaces, tyre forces and moments, multiple unit commercial vehicles, and two-axle vehicles possessed of four-wheel steer geometry.

The vocabulary contained in this International Standard has been developed from the previous edition, and SAE J670, in order to facilitate accurate and unambiguous communication of the terms and definitions employed in the test, analysis and general description of the lateral, longitudinal, vertical and rotational dynamics of road vehicles.

© ISO 2011 – All rights reserved

Documents
Document Sharing Hub
Full document details: BS ISO 8855:2011

Documents
Document Sharing Hub

Full document details: BS ISO 8855:2011

INTERNATIONAL STANDARD ISO 8855:2011(E)

Road vehicles — Vehicle dynamics and road-holding ability — Vocabulary

1 Scope

This International Standard defines the principal terms used for road vehicle dynamics. The terms apply to passenger cars, buses and commercial vehicles with one or more steered axles, and to multi-unit vehicle combinations.

2 Axis system

2.1
reference frame
geometric environment in which all points remain fixed with respect to each other at all times

2.2
inertial reference frame
Newtonian reference frame
reference frame (2.1) that is assumed to have zero linear and angular acceleration and zero angular velocity

NOTE In Newtonian physics, the Earth is assumed to be an inertial reference frame.

2.3
axis system
set of three orthogonal directions associated with X, Y and Z axes

NOTE A right-handed axis system is assumed throughout this International Standard, where: $\vec{Z} = \vec{X} \times \vec{Y}$.

2.4
coordinate system
numbering convention used to assign a unique ordered trio (x, y, z) of values to each point in a **reference frame** (2.1), and which consists of an **axis system** (2.3) plus an origin point

2.5
ground plane
horizontal plane in the **inertial reference frame** (2.2), normal to the gravitational vector

2.6
road surface
surface supporting the tyre and providing friction necessary to generate shear forces in the **road plane** (2.7)

NOTE The surface may be flat, curved, undulated or of other shape.

2.7
road plane
plane representing the **road surface** (2.6) within the tyre contact patch

NOTE 1 For an uneven road, a different road plane may exist at each tyre contact patch.

NOTE 2 For a planar road surface, the road plane is coincident with the road surface. For road surfaces with surface contours having a wavelength similar to or less than the size of the tyre contact patch, as in the case of many ride events,

© ISO 2011 – All rights reserved

Documents
Document Sharing Hub
Full document details: BS ISO 8855:2011

it is intended that an equivalent road plane be determined. Determination of the equivalent road plane is dependent on the requirements of the analysis being performed. The equivalent road plane may not be coincident with the actual road surface at the **contact centre** (4.1.4).

2.7.1
road plane elevation angle
λ
angle from the normal projection of the X_T axis on to the **ground plane** (2.5) to the X_T axis

2.7.2
road plane camber angle
η
angle from the normal projection of the Y_T axis on to the **ground plane** (2.5) to the Y_T axis

2.8
earth-fixed axis system
(X_E, Y_E, Z_E)
axis system (2.3) fixed in the **inertial reference frame** (2.2), in which the X_E and Y_E axes are parallel to the **ground plane** (2.5), and the Z_E axis points upward and is aligned with the gravitational vector

NOTE The orientation of the X_E and Y_E axes is arbitrary and is intended to be based on the needs of the analysis or test.

2.9
earth-fixed coordinate system
(x_E, y_E, z_E)
coordinate system (2.4) based on the **earth-fixed axis system** (2.8) with an origin that is fixed in the **ground plane** (2.5)

NOTE The location of the origin is generally an arbitrary point defined by the user.

2.10
vehicle axis system
(X_V, Y_V, Z_V)
axis system (2.3) fixed in the **reference frame** (2.1) of the vehicle **sprung mass** (4.12), so that the X_V axis is substantially horizontal and forwards (with the vehicle at rest), and is parallel to the vehicle's longitudinal plane of symmetry, and the Y_V axis is perpendicular to the vehicle's longitudinal plane of symmetry and points to the left with the Z_V axis pointing upward

See Figure 1.

NOTE 1 For multi-unit combinations a separate vehicle axis system may be defined for each **vehicle unit** (3.1) (see Figure 2).

NOTE 2 The symbolic notation ($X_{V,1}$, $Y_{V,1}$, $Z_{V,1}$), ($X_{V,2}$, $Y_{V,2}$, $Z_{V,2}$), …, ($X_{V,n}$, $Y_{V,n}$, $Z_{V,n}$) may be assigned to the vehicle axis systems of a multi-unit combination with n **vehicle units** (3.1).

2.11
vehicle coordinate system
(x_V, y_V, z_V)
coordinate system (2.4) based on the **vehicle axis system** (2.10) with the origin located at the **vehicle reference point** (2.12)

2.12
vehicle reference point
point fixed in the vehicle **sprung mass** (4.12)

NOTE The vehicle reference point may be defined in a variety of locations, based on the needs of the analysis or test. Commonly used locations include the total vehicle centre of gravity, the sprung mass centre of gravity, the mid-**wheelbase** (4.2) point at the height of the centre of gravity, and the centre of the front axle. For multi-unit combinations, a vehicle reference point may be defined for each **vehicle unit** (3.1).

© ISO 2011 – All rights reserved
Documents
Document Sharing Hub
Full document details: BS ISO 8855:2011

2.13
intermediate axis system
(X, Y, Z)
axis system (2.3) whose X and Y axes are parallel to the **ground plane** (2.5), with the X axis aligned with the vertical projection of the X_V axis on to the **ground plane** (2.5)

See Figure 1.

NOTE 1 For multi-unit combinations, a separate intermediate axis system may be defined for each **vehicle unit** (3.1).

NOTE 2 The intermediate axis system is used to facilitate the definition of angular orientation terms and the components of force, moment, and motion vectors. An intermediate coordinate system is not defined herein.

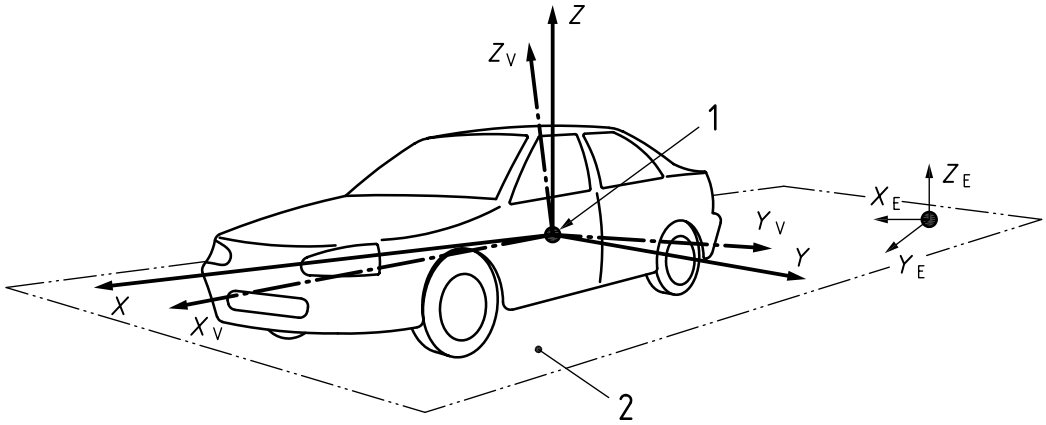

Key
1 vehicle reference point
2 ground plane

Figure 1 — Vehicle and intermediate axis systems

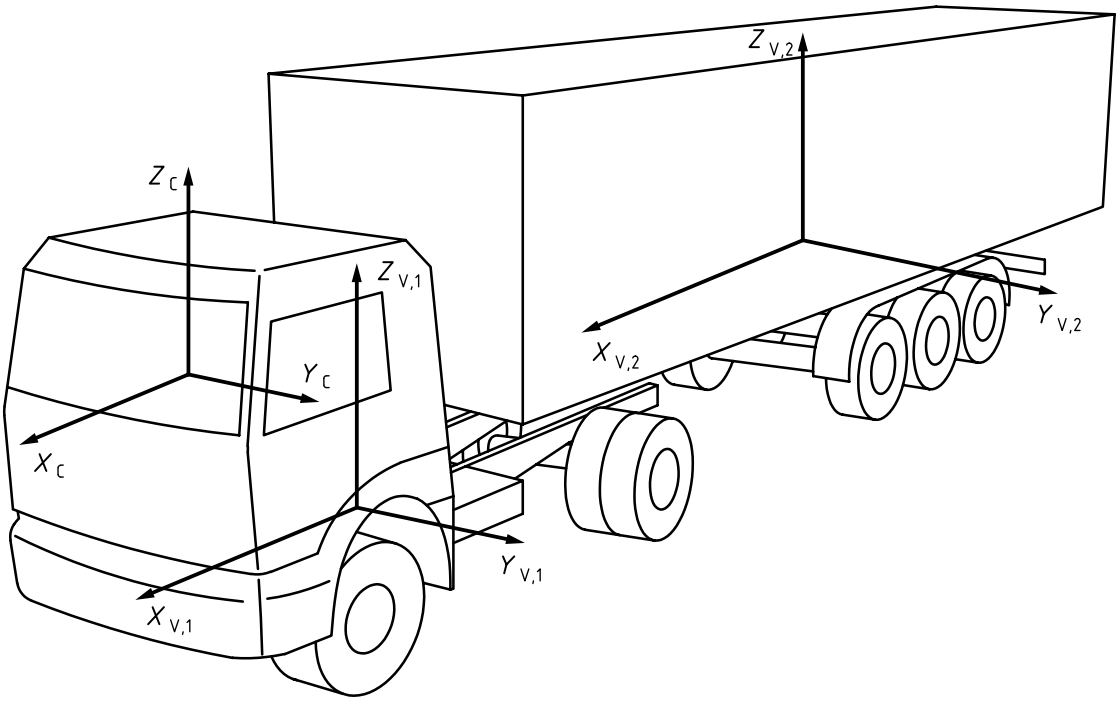

Figure 2 — Multi-unit axis systems

© ISO 2011 – All rights reserved

Documents
Document Sharing Hub
Full document details: BS ISO 8855:2011

2.14
tyre axis system
(X_T, Y_T, Z_T)
axis system (2.3) whose X_T and Y_T axes are parallel to the local **road plane** (2.7), with the Z_T axis normal to the local road plane, where the orientation of the X_T axis is defined by the intersection of the **wheel plane** (4.1) and the road plane, and the positive Z_T axis points upward

NOTE A local tyre axis system may be defined at each wheel (see Figure 3).

2.15
tyre coordinate system
(x_T, y_T, z_T)
coordinate system (2.4) based on the **tyre axis system** (2.14) with the origin fixed at the **contact centre** (4.1.4)

2.16
wheel axis system
(X_W, Y_W, Z_W)
axis system (2.3) whose X_W and Z_W axes are parallel to the **wheel plane** (4.1), whose Y_W axis is parallel to the **wheel-spin axis** (4.1.1), and whose X_W axis is parallel to the local **road plane** (2.7), and where the positive Z_W axis points upward

NOTE A local wheel axis system may be defined for each wheel (see Figure 3).

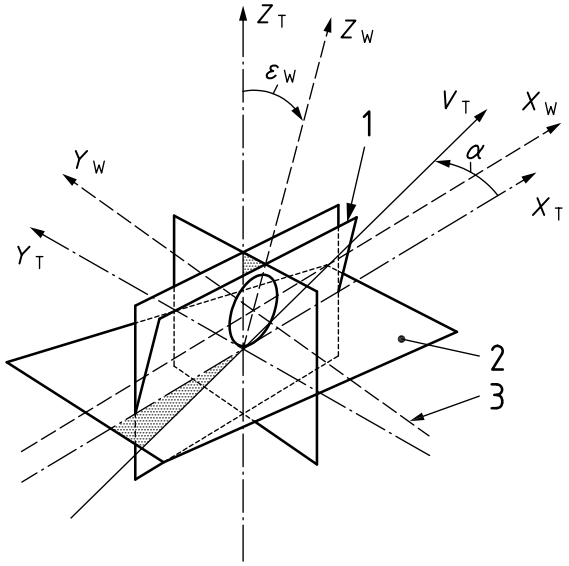

Key
1 wheel plane
2 road plane
3 wheel-spin axis

Figure 3 — Tyre and wheel axis system

2.17
wheel coordinate system
(x_W, y_W, z_W)
coordinate system (2.4) based on the **wheel axis system** (2.16) with the origin fixed at the **wheel centre** (4.1.2)

© ISO 2011 – All rights reserved
Documents
Document Sharing Hub
Full document details: BS ISO 8855:2011

2.18
cab axis system
(X_C, Y_C, Z_C)
axis system (2.3) fixed in the **reference frame** (2.1) of the cab sprung mass, so that the X_C axis is substantially horizontal and forwards (with the vehicle at rest), and is parallel to the vehicle's longitudinal plane of symmetry, and where the Y_C axis is perpendicular to the cab's longitudinal plane of symmetry and points to the left with the Z_C axis pointing upward

NOTE A cab axis system applies only to vehicles with a suspended cab only.

2.19
cab coordinate system
(x_C, y_C, z_C)
coordinate system (2.4) based on the **cab axis system** (2.18) with the origin fixed at an arbitrary point defined by the user

3 Vehicle unit

3.1
vehicle unit
rigid (i.e. non-articulating) vehicle element operating alone or in combination with one or more other rigid elements joined at yaw-articulation joints

NOTE Tractor, **semi trailer** (3.2.2) and **dolly** (3.2.4) are examples of vehicle units. A drawbar **trailer** (3.2) may consist of more than one vehicle unit.

3.2
trailer
vehicle unit (3.1) or combination of multiple vehicle units that is towed by another vehicle unit and can be disconnected from its towing vehicle unit

NOTE A trailer may have a single axle or multiple axles positioned along its length.

3.2.1
full trailer
trailer (3.2) that has both front and rear running gear and, hence, provides fully its own vertical support

3.2.2
semi trailer
trailer (3.2) that has only rear running gear and hence depends on its towing **vehicle unit** (3.1) for a substantial part of its vertical support

NOTE A semi trailer is typically coupled to the towing vehicle unit using a **fifth-wheel coupling** (3.2.6).

3.2.3
centre-axle trailer
trailer (3.2) with only rear running gear located only slightly aft of the nominal position of the centre of gravity of the unit

NOTE A centre-axle trailer is typically coupled to the towing unit with a **hitch coupling** (3.2.7).

3.2.4
dolly
portion of a **full trailer** (3.2.1) that includes the steerable front running gear and tow bar

3.2.5
converter dolly
dolly (3.2.4) unit that couples to a **semi trailer** (3.2.2) with a **fifth-wheel coupling** (3.2.6) and thereby "converts" the semi trailer to a **full trailer** (3.2.1)

© ISO 2011 – All rights reserved

Documents
Document Sharing Hub
Full document details: BS ISO 8855:2011

3.2.6
fifth-wheel coupling
device used to connect a **semi trailer** (3.2.2) to its towing **vehicle unit** (3.1) that is designed to bear the very substantial vertical load imposed by the front of the semi trailer

NOTE A fifth-wheel coupling provides rotational degrees of freedom in the Y_V and Z_V directions, but transmits moments about the X_V axis (all axes are in the towing vehicle unit).

3.2.7
hitch coupling
device used to connect a **trailer** (3.2) or **converter dolly** (3.2.5) tow bar to its towing **vehicle unit** (3.1), which approximates a spherical joint by providing three rotational degrees of freedom within the normal operating range

NOTE Typical examples of hitch couplings include ball hitches and pintle hitches.

4 Vehicle geometry and masses

4.1
wheel plane
plane normal to the **wheel-spin axis** (4.1.1), which is located halfway between the rim flanges

4.1.1
wheel-spin axis
axis of wheel rotation

NOTE This axis is coincident with the Y_W axis.

4.1.2
wheel centre
point at which the **wheel-spin axis** (4.1.1) intersects the **wheel plane** (4.1)

NOTE This point is the origin of the **wheel coordinate system** (2.17).

4.1.3
contact line
intersection of the **wheel plane** (4.1) and the **road plane** (2.7)

4.1.4
contact centre
intersection of the **contact line** (4.1.3) and the normal projection of the **wheel-spin axis** (4.1.1) on to the **road plane** (2.7)

NOTE This point is the origin of the **tyre coordinate system** (2.15). The contact centre may not be the geometric centre of the tyre **contact patch** (4.1.5) due to distortion of the tyre produced by external forces.

4.1.5
contact patch
footprint
portion of the tyre touching the **road surface** (2.6)

4.2
wheelbase
l
distance between the **contact centres** (4.1.4) on the same side of the vehicle, measured parallel to the X axis, with the vehicle at rest on a horizontal surface, with zero **steer angle** (7.1.1)

NOTE 1 A vehicle may have a different wheelbase on the left and right sides by design. It is common practice to average the left and right wheelbases; however, the difference may need to be taken into account in performing some analyses. The wheelbase typically changes as the suspension trim height changes.

© ISO 2011 – All rights reserved
Documents
Document Sharing Hub
Full document details: BS ISO 8855:2011

NOTE 2 This applies to two-axle vehicles only. ISO 21308-2:2006, 6.1, defines the "configuration wheelbase", for multi-axle vehicles, as the distance between the centre of the first front axle to the centre of the first driven rear axle. This term is a dimensional description and is not used in dynamic analysis.

4.3
equivalent wheelbase
l_{eq}

wheelbase (4.2) of a conventional two-axle vehicle (i.e. a vehicle with one steering front axle and one non-steering rear axle) which, given similar front and rear cornering compliance properties, would exhibit the same **steady state** (12.2.1) turning behaviour as is exhibited by the multi-axle vehicle

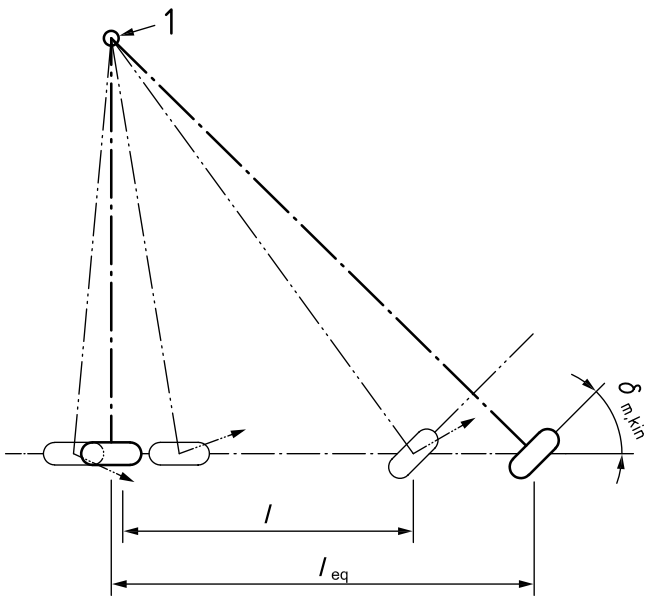

Key

1 turn centre

Figure 4 — Equivalent wheelbase

4.4
track
b

distance between the **contact centres** (4.1.4), on a single wheel axle, measured parallel to the Y axis, with the vehicle at rest on a horizontal surface

NOTE For dual wheel axles, it is the distance between the points centrally located between the contact centres of the inner and outer dual wheels.

4.5
articulation point

instant centre of rotation of two **vehicle units** (3.1) established by the mechanical coupling device joining those two units, typically on the plane of symmetry of both units

NOTE 1 An articulation point may establish one, two, or three degrees of rotational freedom between the two coupled units.

NOTE 2 For **semi trailers** (3.2.2), the longitudinal (X) coordinate of the articulation point is equal to the **fifth-wheel position** (4.9). For **full trailers** (3.2.1), the longitudinal (X) coordinate of the articulation point is equal to the **hitch position** (4.10). For vehicle combinations with more than one **trailer** (3.2), several articulation points may exist.

© ISO 2011 – All rights reserved

Documents
Document Sharing Hub
Full document details: BS ISO 8855:2011

4.6
axle distance
average longitudinal distance between the **contact centres** (4.1.4), on two consecutive axles, measured parallel to the X axis, with the vehicle at rest on a horizontal surface, at zero **steer angle** (7.1.1)

4.7
axle position
average longitudinal distance between the **vehicle reference point** (2.12) and the **contact centres** (4.1.4) of the axle, measured parallel to the X axis, with the vehicle combination at rest on a horizontal surface at zero **steer angle** (7.1.1)

4.8
trailer-axle position
average longitudinal distance between the **contact centres** (4.1.4) of the **trailer** (3.2) axle and the vertical projection of the **articulation point** (4.5) (of the first trailer) on to the **ground plane** (2.5), with the vehicle combination at rest on a horizontal surface in a straight-ahead condition

NOTE Trailers may consist of more than one axle and/or articulation points.

4.9
fifth-wheel position
kingpin position
average longitudinal distance between the **contact centres** (4.1.4) of the first driven rear axle of the towing **vehicle unit** (3.1) and the projection of the **articulation point** (4.5) on to the **ground plane** (2.5), with the vehicle combination at rest on a horizontal surface in a straight-ahead condition

NOTE Applicable to **semi trailers** (3.2.2) only.

4.10
hitch position
average longitudinal distance between the **contact centres** (4.1.4) of the first driven rear axle of the towing **vehicle unit** (3.1) and the projection of the **articulation point** (4.5) on to the **ground plane** (2.5), with the vehicle combination at rest on a horizontal surface in a straight-ahead condition

NOTE Applicable to **full trailers** (3.2.1) only.

4.11
unsprung mass
mass that is not carried by the suspension, but is supported directly by the tyres

4.12
sprung mass
mass that is supported by the suspension, i.e. the total vehicle mass less the **unsprung mass** (4.11)

NOTE It is common practice to allocate a portion of the mass of the suspension linkage, driveshafts and springs in the sprung mass and the remainder in the unsprung mass.

5 Vehicle motion variables

5.1 Linear motion variables

For the definitions in this subclause, velocity and acceleration are relative to the **earth-fixed axis system** (2.8) (X_E, Y_E, Z_E). They are resolved into components in the **intermediate axis system** (2.13) (X, Y, Z).

NOTE It is also possible to resolve velocity and acceleration vectors into components in other **axis systems** (2.3). For example, velocity and acceleration vectors may be resolved in the **vehicle axis system** (2.10) (X_V, Y_V, Z_V) to produce v_{Xv}, v_{Yv}, v_{Zv} and a_{Xv}, a_{Yv}, a_{Zv}.

© ISO 2011 – All rights reserved
Documents
Document Sharing Hub
Full document details: BS ISO 8855:2011

5.1.1
vehicle velocity
$\vec{v}$
vector quantity expressing the velocity of the **vehicle reference point** (2.12)

5.1.2
longitudinal velocity
$\vec{v}_X$
component of the **vehicle velocity** (5.1.1) in the direction of the X axis

5.1.3
lateral velocity
$\vec{v}_Y$
component of the **vehicle velocity** (5.1.1) in the direction of the Y axis

5.1.4
vertical velocity
$\vec{v}_Z$
component of the **vehicle velocity** (5.1.1) in the direction of the Z axis

5.1.5
horizontal velocity
$\vec{v}_h$
resultant of the **longitudinal velocity** (5.1.2) and the **lateral velocity** (5.1.3)

5.1.6
tyre trajectory velocity
$\vec{v}_T$
vector quantity expressing the velocity of the **contact centre** (4.1.4)

5.1.7
tyre longitudinal velocity
$\vec{v}_{XT}$
component of the **tyre trajectory velocity** (5.1.6) in the X_T direction

5.1.8
tyre lateral velocity
$\vec{v}_{YT}$
component of the **tyre trajectory velocity** (5.1.6) in the Y_T direction

5.1.9
tyre vertical velocity
$\vec{v}_{ZT}$
component of the **tyre trajectory velocity** (5.1.6) in the Z_T direction

5.1.10
vehicle acceleration
$\vec{a}$
vector quantity expressing the acceleration of the **vehicle reference point** (2.12)

5.1.11
longitudinal acceleration
$\vec{a}_X$
component of the **vehicle acceleration** (5.1.10) in the direction of the X axis

5.1.12
lateral acceleration
$\vec{a}_Y$
component of the **vehicle acceleration** (5.1.10) in the direction of the Y axis

© ISO 2011 – All rights reserved

Documents
Document Sharing Hub
Full document details: BS ISO 8855:2011