BS ISO 8933-2:2024

BSI Standards Publication

Ships and Marine Technology — Energy efficiency

Part 2: Energy efficiency of maritime functional systems

Documents
Document Sharing Hub

Full document details: BS ISO 8933-2:2024

National foreword

This British Standard is the UK implementation of ISO 8933-2:2024.

The UK participation in its preparation was entrusted to Technical Committee SME/32, Ships and marine technology - Steering committee.

A list of organizations represented on this committee can be obtained on request to its committee manager.

Contractual and legal considerations

This publication has been prepared in good faith, however no representation, warranty, assurance or undertaking (express or implied) is or will be made, and no responsibility or liability is or will be accepted by BSI in relation to the adequacy, accuracy, completeness or reasonableness of this publication. All and any such responsibility and liability is expressly disclaimed to the full extent permitted by the law.

This publication is provided as is, and is to be used at the recipient's own risk.

The recipient is advised to consider seeking professional guidance with respect to its use of this publication.

This publication is not intended to constitute a contract. Users are responsible for its correct application.

© The British Standards Institution 2024
Published by BSI Standards Limited 2024

ISBN 978 0 539 19867 6

ICS 47.020.01

Compliance with a British Standard cannot confer immunity from legal obligations.

This British Standard was published under the authority of the Standards Policy and Strategy Committee on 31 August 2024.

Amendments/corrigenda issued since publication

Date	Text affected

Documents
Document Sharing Hub

Full document details: BS ISO 8933-2:2024

International Standard

ISO 8933-2

First edition
2024-08

Ships and marine technology — Energy efficiency —

Part 2: Energy efficiency of maritime functional systems

Navires et technologie maritime — Efficacité énergétique —

Partie 2: Efficacité énergétique des systèmes fonctionnels maritimes

Reference number
ISO 8933-2:2024(en)

© ISO 2024

Documents
Document Sharing Hub

Full document details: BS ISO 8933-2:2024

COPYRIGHT PROTECTED DOCUMENT

© ISO 2024

All rights reserved. Unless otherwise specified, or required in the context of its implementation, no part of this publication may be reproduced or utilized otherwise in any form or by any means, electronic or mechanical, including photocopying, or posting on the internet or an intranet, without prior written permission. Permission can be requested from either ISO at the address below or ISO's member body in the country of the requester.

ISO copyright office
CP 401 • Ch. de Blandonnet 8
CH-1214 Vernier, Geneva
Phone: +41 22 749 01 11
Email: copyright@iso.org
Website: www.iso.org

Published in Switzerland

Documents
Document Sharing Hub
Full document details: BS ISO 8933-2:2024

Contents

Page

Foreword ... **vi**
Introduction ... **vii**
1 Scope ... **1**
2 Normative references ... **1**
3 Terms and definitions ... **1**
4 Symbols and abbreviated terms ... **2**
5 Methods to evaluate the energy efficiency of maritime functional systems ... **3**
6 Pressure and flow functional systems ... **4**
6.1 General ... 4
6.2 Ballast water management system ... 5
6.2.1 General ... 5
6.2.2 Ultraviolet treatment systems ... 6
6.2.3 Electro-chlorination treatment systems ... 8
6.3 Freshwater generator ... 10
6.3.1 General ... 10
6.3.2 Definition of input and output ... 11
6.3.3 Definitions of boundaries and media ... 11
6.3.4 Calculation method ... 11
6.3.5 Measuring method ... 13
6.3.6 Example of measuring and calculations ... 14
6.4 Seawater cooling system ... 15
6.4.1 General ... 15
6.4.2 Definition of input and output ... 15
6.4.3 Definitions of boundaries and media ... 15
6.4.4 Calculation method ... 16
6.4.5 Measuring method ... 17
6.4.6 Example of measuring and calculation ... 17
6.5 Freshwater cooling system ... 18
6.5.1 General ... 18
6.5.2 Definition of input and output ... 18
6.5.3 Definitions of boundaries and media ... 18
6.5.4 Calculation method ... 19
6.5.5 Measuring method ... 20
6.5.6 Example of measuring and calculation ... 20
6.6 Engine lube oil system ... 21
6.6.1 General ... 21
6.6.2 Definition of input and output ... 21
6.6.3 Definitions of boundaries and media ... 21
6.6.4 Calculation method ... 22
6.6.5 Measuring method ... 23
6.6.6 Example of measuring and calculation ... 24
6.7 Steam boiler system, thermal fluid system and hot water system ... 24
6.7.1 General ... 24
6.7.2 Definition of input and output ... 25
6.7.3 Definitions of boundaries and media ... 25
6.7.4 Calculation method ... 26
6.7.5 Measuring method ... 27
6.7.6 Example of measuring and calculation ... 28
6.8 Cargo pump system ... 29
6.8.1 General ... 29
6.8.2 Definition of input and output ... 29
6.8.3 Definitions of boundaries and media ... 29
6.8.4 Calculation method ... 30

© ISO 2024 – All rights reserved

Documents
Document Sharing Hub
Full document details: BS ISO 8933-2:2024

6.8.5 Measuring method ... 31
6.8.6 Example of measuring and calculation ... 31
6.9 Cargo heating system ... 32
6.9.1 General ... 32
6.9.2 Definition of input and output ... 32
6.9.3 Definitions of boundaries and media ... 32
6.9.4 Calculation method ... 33
6.9.5 Measuring method ... 34
6.9.6 Example of measuring and calculation ... 34
6.10 Volatile organic compound recovery system ... 34
6.10.1 General ... 34
6.10.2 Definition of input and output ... 34
6.10.3 Definitions of boundaries and media ... 35
6.10.4 Calculation method ... 35
6.10.5 Measuring method ... 36
6.10.6 Example of measuring and calculation ... 37
6.11 Separator system ... 37
6.11.1 General ... 37
6.11.2 Definition of input and output ... 38
6.11.3 Definition of boundaries and media ... 38
6.11.4 Calculation method ... 38

7 Lighting systems ... 39
7.1 General ... 39
7.2 Lighting of internal spaces ... 39
7.2.1 General ... 39
7.2.2 Definition of input and output ... 40
7.2.3 Definitions of boundaries and media ... 40
7.2.4 Calculation method ... 40
7.2.5 Measuring method ... 40
7.2.6 Example of measuring and calculation ... 42

8 Heating/cooling functional systems ... 43
8.1 General ... 43
8.2 Air-conditioning system with compressor ... 43
8.2.1 General ... 43
8.2.2 Definition of input and output ... 43
8.2.3 Definitions of boundaries and media ... 44
8.2.4 Calculation method ... 46
8.2.5 Measurement method ... 47
8.2.6 Example of measuring and calculation ... 48
8.3 Air-conditioning system without compressor ... 48
8.3.1 General ... 48
8.3.2 Definition of input and output ... 48
8.3.3 Definitions of boundaries and media ... 49
8.3.4 Calculation method ... 50
8.3.5 Measurement method ... 50
8.3.6 Example of measuring and calculation ... 51
8.4 Absorption chiller system ... 52
8.4.1 General ... 52
8.4.2 Definition of input and output ... 52
8.4.3 Definitions of boundaries and media ... 52
8.4.4 Calculation method ... 53
8.4.5 Measuring method ... 54
8.4.6 Example of measuring and calculation ... 54
8.5 Compression-type water chilling system ... 55
8.5.1 General ... 55
8.5.2 Definition of input and output ... 55
8.5.3 Definitions of boundaries and media ... 55
8.5.4 Calculation method ... 57

© ISO 2024 – All rights reserved

Documents
Document Sharing Hub
Full document details: BS ISO 8933-2:2024

8.5.5 Measuring method ... 58
8.5.6 Example of measuring and calculation ... 58

9 Mechanical functional systems ... 59
9.1 General ... 59
9.2 Propulsion shafting system ... 59
9.2.1 General ... 59
9.2.2 Definition of input and output ... 59
9.2.3 Definitions of boundaries and media ... 59
9.2.4 Calculation method ... 60
9.2.5 Measuring method ... 61
9.3 Deck crane system ... 62
9.3.1 General ... 62
9.3.2 Definition of input and output ... 62
9.3.3 Definitions of boundaries and media ... 62
9.3.4 Calculation method ... 63
9.3.5 Measuring method ... 66
9.4 Ship anchor and mooring winch system ... 67
9.4.1 General ... 67
9.4.2 Definition of input and output ... 67
9.4.3 Definitions of boundaries and media ... 67
9.4.4 Calculation method ... 68
9.4.5 Measuring method ... 69
9.5 Steering gear system ... 70
9.5.1 General ... 70
9.5.2 Definition of input and output ... 70
9.5.3 Definitions of boundaries and media ... 71
9.5.4 Calculation method ... 71
9.5.5 Measuring method ... 72

10 Propulsion functional systems ... 73
10.1 General ... 73
10.2 Solar photovoltaic system ... 74
10.2.1 General ... 74
10.2.2 Definition of input and output ... 74
10.2.3 Definitions of boundaries and media ... 74
10.2.4 Calculation method ... 74
10.2.5 Measuring method ... 76
10.3 Wind propulsion system ... 77
10.3.1 General ... 77
10.3.2 Definition of input and output ... 77
10.3.3 Definitions of boundaries and media ... 77
10.3.4 Calculation method ... 77
10.3.5 Measuring method ... 78
10.4 Fuel cell system ... 78
10.4.1 General ... 78
10.4.2 Definition of input and output ... 79
10.4.3 Definitions of boundaries and media ... 79
10.4.4 Calculation method ... 81
10.4.5 Measuring method ... 83
10.4.6 Example of calculation ... 83
10.5 Waste heat recovery system ... 84
10.5.1 General ... 84
10.5.2 Definition of input and output ... 84
10.5.3 Definitions of boundaries and media ... 84
10.5.4 Calculation method ... 84
10.5.5 Measuring method ... 85
10.5.6 Example of measuring and calculation ... 85

Bibliography ... 86

© ISO 2024 – All rights reserved

Documents
Document Sharing Hub
Full document details: BS ISO 8933-2:2024

Foreword

ISO (the International Organization for Standardization) is a worldwide federation of national standards bodies (ISO member bodies). The work of preparing International Standards is normally carried out through ISO technical committees. Each member body interested in a subject for which a technical committee has been established has the right to be represented on that committee. International organizations, governmental and non-governmental, in liaison with ISO, also take part in the work. ISO collaborates closely with the International Electrotechnical Commission (IEC) on all matters of electrotechnical standardization.

The procedures used to develop this document and those intended for its further maintenance are described in the ISO/IEC Directives, Part 1. In particular, the different approval criteria needed for the different types of ISO document should be noted. This document was drafted in accordance with the editorial rules of the ISO/IEC Directives, Part 2 (see www.iso.org/directives).

ISO draws attention to the possibility that the implementation of this document may involve the use of (a) patent(s). ISO takes no position concerning the evidence, validity or applicability of any claimed patent rights in respect thereof. As of the date of publication of this document, ISO had not received notice of (a) patent(s) which may be required to implement this document. However, implementers are cautioned that this may not represent the latest information, which may be obtained from the patent database available at www.iso.org/patents. ISO shall not be held responsible for identifying any or all such patent rights.

Any trade name used in this document is information given for the convenience of users and does not constitute an endorsement.

For an explanation of the voluntary nature of standards, the meaning of ISO specific terms and expressions related to conformity assessment, as well as information about ISO's adherence to the World Trade Organization (WTO) principles in the Technical Barriers to Trade (TBT), see www.iso.org/iso/foreword.html.

This document was prepared by Technical Committee ISO/TC 8, *Ships and marine technology*.

A list of all parts in the ISO 8933 series can be found on the ISO website.

Any feedback or questions on this document should be directed to the user's national standards body. A complete listing of these bodies can be found at www.iso.org/members.html.

© ISO 2024 – All rights reserved

Documents
Document Sharing Hub
Full document details: BS ISO 8933-2:2024

Introduction

Environmental concerns, emission regulations, fuel prices and emission taxes are increasing the demand for greater energy efficiency in the shipping industry. In 2013, the International Maritime Organization (IMO) adopted the Ship Energy Efficiency Management Plan (SEEMP)[10] to significantly decrease the amount of carbon dioxide (CO_2) emissions by 10 % to 50 % per transport work in international shipping. This strategy refers to a pathway of CO_2 emission reduction which is consistent with the goals of the Paris Agreement[13], alongside the United Nations 2030 Agenda for Sustainable Development[14].

Standardizing methods to evaluate energy efficiency in the maritime sector interface is valuable for a range of different stakeholders, including:

— shipowners who are looking to buy maritime systems to comply with IMO SEEMP initiatives;

— maritime equipment and engine manufacturers who are responsible for the design and production of ship systems;

— governments that are committed to environmental regulations and environmental targets such as the "levels of ambition" adopted by the IMO.

The purpose of this document is to improve energy efficiency in ships by providing more energy-efficient options that can be considered when replacing malfunctioning components throughout the ship's lifetime.

This document allows shipowners and shipyard workers to objectively identify the most energy-efficient components, systems and solutions for retrofits, as well as new-builds.

This document provides a method for comparing energy performance on an objective basis to prevent energy loss and to improve cost-efficiency and environmental conditions during maritime transport. This document makes it possible for users to compare the energy efficiency of different individual maritime components or functional units based on a standardized method to measure and calculate the values.

It is widely established that the usual combination of the most efficient single systems on board do not lead in sum to the most efficient ship. It is common practice that owners instruct shipyards to meet the criteria for an optimized operating point of the respective ship system during the design phase (new-build or reconstruction).

Accordingly, a shipyard checks before installation that each single system or component meets good energy efficiency values. It is not possible to calculate the ship's overall efficiency if the operating conditions are not standardized.

An example of a system or component where the efficiency depends on the operational conditions is an engine room ventilation without a given fan speed control system. If the fan is designed and optimized for the tropical zone and the ship is operated under North Atlantic conditions, less power is necessary during winter times. Owing to the absence of a controller, the fan rotation speed cannot be adjusted. In sum, every single fan can operate efficiently on a test bed (value given by manufacturer). An efficient performance is questionable if the ship sails under different operational conditions than what it is designed for.

To raise the overall operational energy efficiency of a ship in different operational conditions, the overall ship-individual combined system efficiency check should be performed. In addition, manufacturers and operators should take into account the possible variations between test bed conditions and onboard test conditions when developing individual components and systems.

© ISO 2024 – All rights reserved

Documents
Document Sharing Hub
Full document details: BS ISO 8933-2:2024

Documents
Document Sharing Hub

Ships and marine technology — Energy efficiency —

Part 2: Energy efficiency of maritime functional systems

1 Scope

This document specifies generic measuring and calculation methods to evaluate the energy efficiency of multiple components connected in a functional system installed on board ships, vessels for inland navigation and offshore structures.

A maritime functional system consists of multiple components integrating multiple functions, working together to achieve an overall goal.

The purpose of this document is to show how the energy efficiency of various functional systems correspond to the other installations on board of same functionality, thus ensuring that efficient design is rewarded.

Maritime systems are grouped according to their functionality, to compare the energy efficiency of functional systems which can fulfil the same task on board a ship.

This document is applicable to only the functional systems for which a unit output can be clearly defined, and which require energy to function.

This document is applicable to energy consuming functional systems. It does not provide a life cycle assessment (LCA).

NOTE An LCA can prove useful when considering systems which consume substances, and which would not meet the functional requirements without the use of these substances. An example is a ballast water management system (BWMS) using active substances (these types are not considered in this document).

This document is applicable to the following five types of functional systems:

a) pressure and flow;

b) lighting;

c) heating and cooling;

d) mechanical;

e) propulsion.

2 Normative references

There are no normative references in this document.

3 Terms and definitions

For the purposes of this document, the following terms and definitions apply.

ISO and IEC maintain terminology databases for use in standardization at the following addresses:

— ISO Online browsing platform: available at https://www.iso.org/obp

© ISO 2024 – All rights reserved

Documents
Document Sharing Hub
Full document details: BS ISO 8933-2:2024

— IEC Electropedia: available at https://www.electropedia.org/

3.1
energy efficiency
ratio or other quantitative relationship between an *output* (3.6) of performance, service, goods or energy, and an *input* (3.5) of energy

EXAMPLE Efficiency conversion energy; energy required/energy used; output/input; theoretical energy used to operate/energy used to operate.

Note 1 to entry: Both input and output shall be clearly specified in quantity and be measurable.

[SOURCE: ISO/IEC 13273-1:2015, 3.4.1, modified — "and quality" deleted in Note 1 to entry.]

3.2
component
element performing only one *function* (3.4) and whose efficiency is defined by the ratio between *input* (3.5) and *output* (3.6)

EXAMPLE Electric motor, water pump.

3.3
functional system
collection of *components* (3.2) creating a system which performs a well-defined *function* (3.4)

Note 1 to entry: The components included in the functional system can be energy consuming or passive components. A functional system can also contain a system, controlling the operation of the components.

Note 2 to entry: The energy consumption of a functional system is not only defined by the efficiency of the individual components but is also influenced by the design of the integration between these components.

Note 3 to entry: A functional system is supplied by a single supplier who is responsible for the integration of the components, and the function and performance of the unit based on a set of boundary conditions defining the quality/amount of *input* (3.5) and *output* (3.6).

3.4
function
operation that is performed by the system

Note 1 to entry: The function will have an *output* (3.6) characterized by the type and amount of output, i.e. treated volume/force/energy, and an *input* (3.5) in the form of consumed energy.

3.5
input
product, material or energy flow that enters a unit process

Note 1 to entry: Products and materials include raw materials, intermediate products and co-products.

3.6
output
product, material or energy flow that leaves a unit process

Note 1 to entry: Products and materials include raw materials, intermediate products, co-products and releases.

3.7
system boundary
boundary based on a set of criteria specifying which unit processes are part of the system under study

4 Symbols and abbreviated terms

The following symbols and abbreviated terms are used throughout the document.

© ISO 2024 – All rights reserved

Documents
Document Sharing Hub
Full document details: BS ISO 8933-2:2024

η	efficiency ratio	dimensionless
EER	efficiency ratio used in the heating/cooling industry	non-dimensionless
COP	performance coefficient used in the air-conditioning industry	dimensionless
TPI	thermal power index used in the air-conditioning industry	dimensionless
ECI	energy consumption index used in the ship cargo industry	non-dimensionless
E	energy consumption	J
P	power consumption	W
Q	thermal energy	J
q_V	volume flow rate	m^3/s
q_m	mass flow rate	kg/s
ρ	density of water	kg/m^3
c_v	heat capacity of water	kJ/kg K
h	enthalpy	J/kg
T	temperature	K or °C
V	volume	m^3

5 Methods to evaluate the energy efficiency of maritime functional systems

Maritime functional systems are grouped according to their functionality. This makes it easier to compare the energy efficiency of functional systems which can solve the same task on board a vessel.

This document examines functional systems divided into following topical areas:

a) pressure and flow functional systems (see Clause 6);

b) lighting functional systems (see Clause 7);

c) heating and cooling functional systems (see Clause 8);

d) mechanical functional systems (see Clause 9);

e) propulsion functional systems (see Clause 10).

The energy efficiency of the system is evaluated based on its expected operational purpose on board the ship and during its expected process operating window. This means that the boundary conditions on which the system is evaluated are defined to represent the normal operational pattern. This can include the variations in ambient conditions or variations in the ship's operational pattern. This is defined for each functional system.

The basic terminology of a maritime functional system is illustrated in Figure 5.1.

© ISO 2024 – All rights reserved

Documents
Document Sharing Hub
Full document details: BS ISO 8933-2:2024

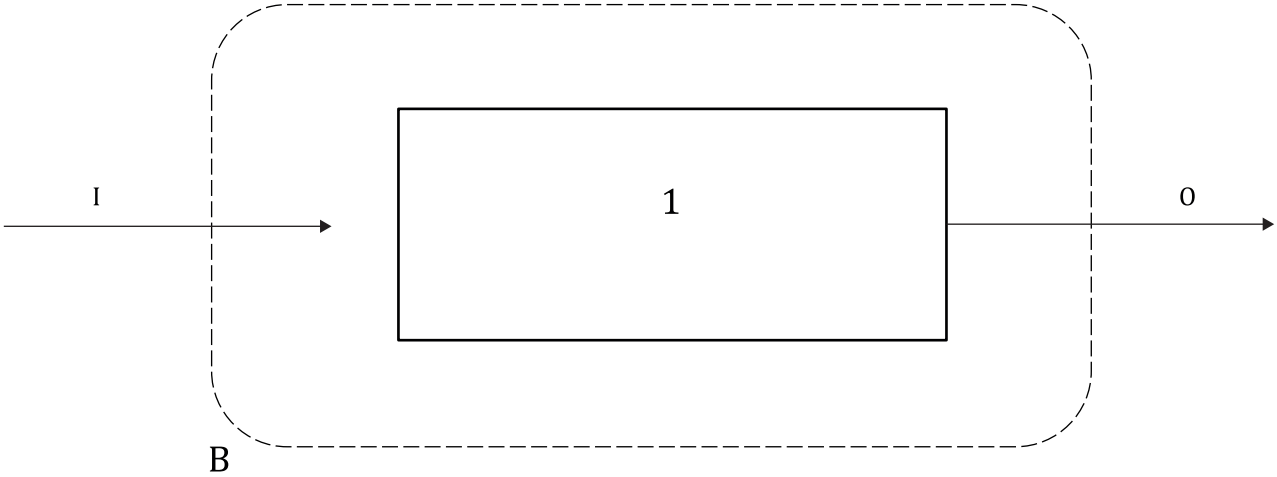

Key

B boundary

1 functional system

I input (energy, temperature, pressure, flow, concentration, force, velocity, torque, electricity, etc.)

O output (energy, temperature, pressure, flow, concentration, force, velocity, torque, electricity, etc.)

Figure 5.1 — Basic terminology of a maritime functional system

6 Pressure and flow functional systems

6.1 General

A pressure-driven functional system consists of several components and connections between those components. The combined key functionality of these components (and the connections between them) changes the pressure or flow in a fluid.

The systems under this category include:

— ballast water management system (BWMS) (see 6.2), including:

  — ultraviolet (UV) light technology;

  — electro-chlorination (EC) technology;

— freshwater generator (see 6.3);

— sea water cooling system (see 6.4);

— freshwater cooling system (see 6.5);

— engine lube oil system (see 6.6);

— steam boiler system, thermal fluid system and hot water system (see 6.7);

— cargo pump system (see 6.8);

— cargo heating system (see 6.9);

— volatile organic compound (VOC) recovery system (see 6.10);

— separator system (see 6.11).

© ISO 2024 – All rights reserved

Documents
Document Sharing Hub
Full document details: BS ISO 8933-2:2024

6.2 Ballast water management system

6.2.1 General

A BWMS[6] processes ballast water so that the water discharged (the treated water) meets the specified performance requirements for eliminating, inactivating or reducing an aquatic organism to prevent the problem of invasive species.

The energy efficiency calculation should be made based on an "output" treated water quality, meeting at least the D-2 standard of the IMO's Ballast Water Management (BWM) Convention.[6] If it is based on a stricter quality standard, this should be stated.

The BWM Convention requires BWMS to undergo type approval testing as described in the BWMS Code.[6][11] The data from the type approval test are needed for the establishment of the energy efficiency ratio (EER). A BWMS must be type approved for operation in:

— fresh water (< 1 PSU);

— brackish water (10 PSU to 20 PSU);

— marine water (28 PSU to 36 PSU).

NOTE 1 PSU = practical salinity unit.

The energy consumption of a BWMS can vary with the water type and therefore this must be considered when calculating the energy efficiency.

NOTE 2 If a system has not been part of a type approval, it must undergo testing under the same requirements as described in the BWMS Code to obtain the needed data to be able to compare systems on EER on a level basis.

The energy required to pump the water to the BWMS is not considered for several reasons, including:

— the pump(s) is normally out of the scope of the delivered BWMS;

— the pump(s) can have shared services on board the ship and is thus not necessarily dimensioned to fit the installed BWMS;

— the sizing of the pump(s) is dependent upon the location of the tanks and BWMS.

Hence, the pressure drop in the piping system from the pump(s) to the BWMS is also not considered.

Both UV and EC systems may deploy mechanical separation (filter, hydro-cyclone, etc.) to eliminate larger algae and organisms. For systems which are dependent on separation to comply with the BWM Convention, the separation units form part of the testing for type approval. The power needed for operation of separation under the approval conditions should be included in the EER consideration.

The energy efficiency of the BWMS is expressed through an EER as energy/volume. Since there are numerous parameter dependencies on the energy efficiency of BWMS, this document shows two EERs calculated for each water type, as applicable:

— one for nominal operation conditions: EER_{nom};

— one for the combination of high or low range values of any given parameter which will provide the highest index: EER_{max}.

NOTE 3 The higher the EER, the lower the energy efficiency.

Along with results of the EERs, it is necessary to present information on the treatment rated capacity, the water type (as applicable) and the system design limitation, including the holding time. However, if these data are available from the type approval certificate (according to the BWMS Code), this certificate can be appended.

© ISO 2024 – All rights reserved

Documents
Document Sharing Hub
Full document details: BS ISO 8933-2:2024

6.2.2 Ultraviolet treatment systems

6.2.2.1 General

The ballast water is treated prior to entering the ballast water tank(s). After a typical mechanical separation, the ballast water passes the UV reactor. Most systems can apply additional UV treatment when discharging the ballast water tank(s), which should also be reflected in the energy efficiency calculation.

6.2.2.2 Definition of input and output

The input and output of UV treatment systems consists of the following:

— Input: Electricity (UV treatment, mechanical separation (if applicable) and other auxiliary systems tested during the type approval) and untreated ballast water.

— Output: Treated ballast water compliant with at least the IMO D-2 discharge standard[6] (if another stricter standard is the output, this should be stated) and separated material.

6.2.2.3 Definitions of boundaries and media

The physical boundaries are defined to start from the inlet of the BWMS to the end at the outlet of the BWMS. Thus, any sampling ports, the ballast pump(s), and the piping to and from the BWMS are not included. Other electricity consumers, such as either a booster or backflushing pumps, should be included in the calculation if they are operated as part of the system-type approval. The cleaning in place (CIP) process is conducted independently of the treatment of ballast water and cannot be related to the functional unit. Therefore, the energy consumption of the CIP process is not included in the calculations.

The possible elements in a UV BWMS and the boundaries for the energy efficiency calculation are shown in Figure 6.1.

© ISO 2024 – All rights reserved

Documents
Document Sharing Hub
Full document details: BS ISO 8933-2:2024

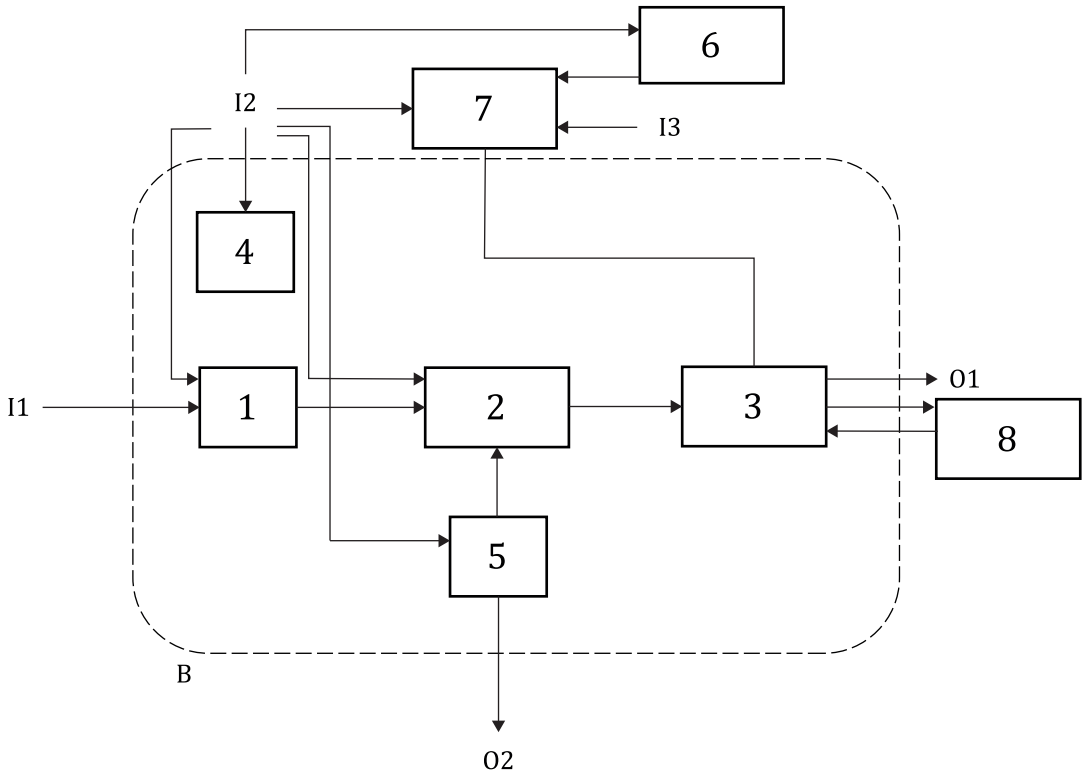

Key

B	boundary	1	booster pump
I1	untreated ballast water	2	filter
I2	electric energy	3	UV reactor
I3	cleaning agent	4	control system
O1	compliant ballast water	5	backflush pump
O2	backflush material	6	fresh water
		7	cleaning in place unit
		8	ballast tank

Figure 6.1 — Possible components of a UV BWMS

6.2.2.4 Calculation method

Formula (6.1) shows how to calculate the average of x repetitive tests for energy consumption (measured by an energy meter) during a ballast operation and a de-ballast operation of minimum 100 m^3 of ballast water.

NOTE Energy consumption is often lower during a de-ballast operation.

$$EER_{x,y} = \overline{\sum_{i=1}^{i} \left(E_{\mathrm{UV,b},x,y} + E_{\mathrm{UV,db},x,y} \right)_i} \tag{6.1}$$

© ISO 2024 – All rights reserved

Documents
Document Sharing Hub
Full document details: BS ISO 8933-2:2024

where

$EER_{x,y}$ is the EER, expressed in kJ/100 m^3 (1 kJ = $\frac{1}{3600}$ kWh), where x can be one of the two conditions nominal (nom) or maximum (max) and y is the water type fresh, brackish or sea;

i is the test number per x and y;

$E_{\mathrm{UV,b},\ x,y}$ is the energy consumption measured during ballasting, expressed in kJ/100 m^3 (1 kJ = $\frac{1}{3600}$ kWh) for the UV BWMS, where x can be one of the two conditions nominal (nom) or maximum (max) and y is the water type fresh, brackish or sea;

$E_{\mathrm{UV,db},x,y}$ is the energy consumption measured during de-ballasting, expressed in kJ/100 m^3 (1 kJ = $\frac{1}{3600}$ kWh) for the UV BWMS, where x can be one of the two conditions nominal (nom) or maximum (max) and y is the water type fresh, brackish or sea.

Hence, the following values can be expected, dependent upon the system capabilities: $EER_{\mathrm{nom,fresh}}$, $EER_{\mathrm{nom,brackish}}$, $EER_{\mathrm{nom,sea}}$, $EER_{\mathrm{max,fresh}}$, $EER_{\mathrm{max,brackish}}$ and $EER_{\mathrm{max,sea}}$.

6.2.2.5 Measuring method

It is assumed that data for the calculation of the EER are available from the type approval test data.

The influent water should comply with the specification of the BWMS Code, MEPC.300(72)[11] with regards to dissolved organic carbon (DOC), particulate organic carbon (POC) or total suspended solids (TSS). Calculations should be done for all water types for which the BWTS have been type approved, e.g. fresh water (< 1 PSU), brackish water (10 PSU to 20 PSU) and marine water (28 PSU to 36 PSU), unless the manufacturer can document that the energy consumption is independent of the salinity. The temperature of the water does not affect the energy consumption of a UV BWMS.

For both the nominal operational condition (nom) and maximum operational condition (max), the data on the electricity consumed during ballast and the data on the electricity consumed during de-ballast is required.

The data should include influent water with both high (≥ 80 %) and low (≤ 55 %) UV transmittance (UV-T). The high UV transmittance reflects the nominal operation conditions and the low UV-T reflects the maximum operational conditions.

6.2.3 Electro-chlorination treatment systems

6.2.3.1 General

In this subclause, the treating of ballast water uses an EC treatment method. The full-flow ballast water may pass the EC reactor, or a substance is produced in a side stream by the EC reactor and dosed to the full flow ballast water.

6.2.3.2 Definition of input and output

The input and output of EC treatment systems consists of the following:

— Input: Electricity (electro-chlorination, mechanical separation (if applicable), neutralization, heating and other auxiliary systems tested during the type approval) and untreated ballast water.

— Output: Treated ballast water compliant with at least the IMO D-2 discharge standard[6] (if another stricter standard is the output, this should be stated) and separated material.

© ISO 2024 – All rights reserved

Documents
Document Sharing Hub
Full document details: BS ISO 8933-2:2024

6.2.3.3 Definitions of boundaries and media

The physical boundaries are defined to start from the inlet of the BWMS to the end at the outlet of the BWMS. Thus, any sampling ports, the ballast pump(s), and piping to and from the BWMS are not included. Other pumps, such as booster and/or backflushing pumps, should be included in the calculation, as well as a degas unit, if they are integrated parts of the system.

The main elements of an EC BWMS are shown in Figure 6.2.

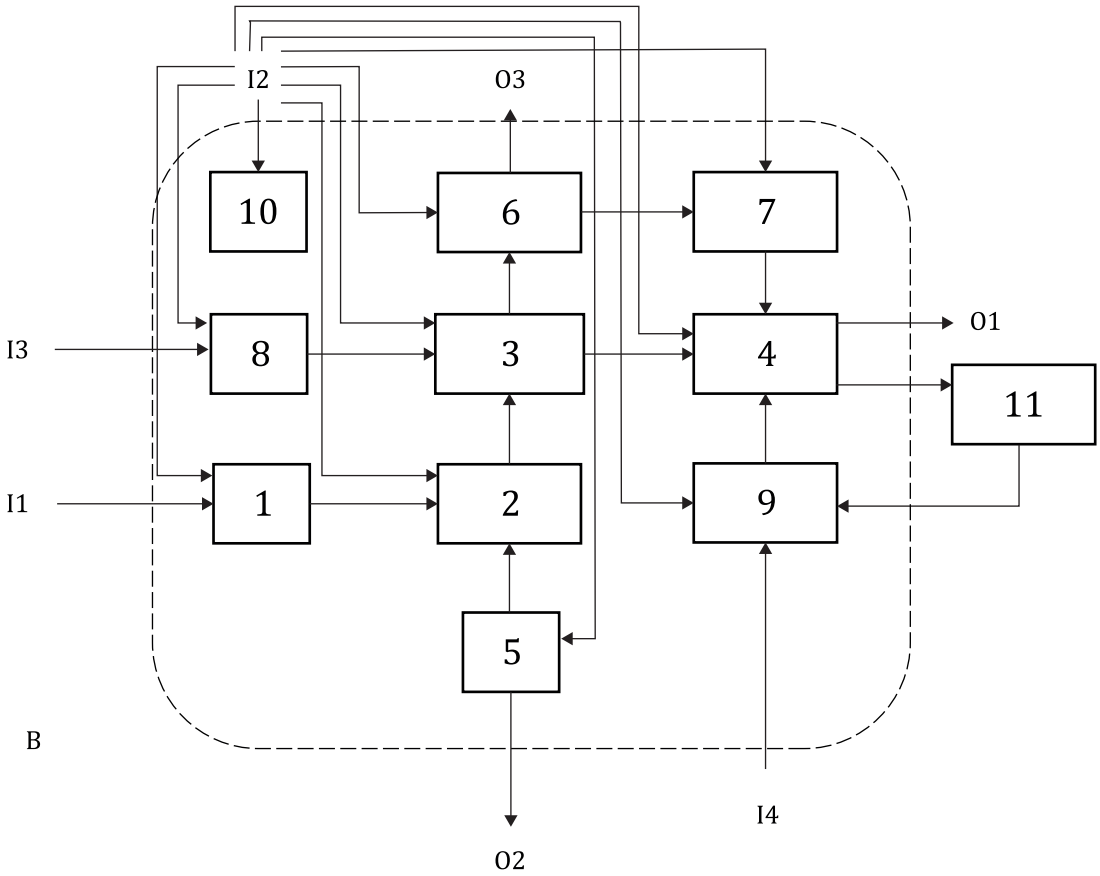

Key

B	boundary	1	booster pump
I1	untreated ballast water	2	filter/strainer
I2	electric energy	3	electro chlorination unit
I3	salt water	4	TRO sensor
I4	neutralising agent	5	backflush pump
O1	compliant ballast water	6	degas/dosing unit
O2	backflush material	7	mixer unit
O3	hydrogen	8	side-stream pump
		9	neutralization unit
		10	control system
		11	ballast tank

NOTE 1 Some systems lead all the ballast water through the electrolyser.

NOTE 2 Other systems generate oxidants in a side stream flow and mix with the main ballast flow.

Figure 6.2 — Typical key components of an EC BWMS

© ISO 2024 – All rights reserved

Documents
Document Sharing Hub
Full document details: BS ISO 8933-2:2024

6.2.3.4 Calculation method

Formula (6.2) shows how to calculate the average of x repetitive tests for energy consumption (measured by an energy meter) during a ballast operation and a de-ballast operation of minimum 100 m^3 of ballast water.

NOTE Energy consumption is often lower during a de-ballast operation.

$$EER_{x,y} = \overline{\sum_{i=1}^{i} \left(E_{\mathrm{EC,b},x,y} + E_{\mathrm{EC,db},x,y} \right)_i} \tag{6.2}$$

where

$EER_{x,y}$ is the EER, expressed in kJ/100 m^3 (1 kJ = $\frac{1}{3\,600}$ kWh), where x can be one of the two conditions nominal (nom) or maximum (max) and y is the water type fresh, brackish or sea;

i is the test number per x and y;

$E_{\mathrm{EC,b},\ x,y}$ is the energy consumption measured, expressed in kJ/100 m^3 (1 kJ = $\frac{1}{3\,600}$ kWh), during ballasting for the EC BWMS, where x can be one of the two conditions nominal (nom) or maximum (max) and y is the water type fresh, brackish or sea;

$E_{\mathrm{EC,db},\ x,y}$ is the energy consumption, expressed in kJ/100 m^3 (1 kJ = $\frac{1}{3\,600}$ kWh), measured during de-ballasting for the EC BWMS, where x can be one of the two conditions nominal (nom) or maximum (max) and y is the water type fresh, brackish or sea.

6.2.3.5 Measuring method

It is assumed that the data for the calculation of the EER is available from the type approval test data.

The influent water should comply with the specification of the BWMS Code, MEPC.300(72)[11] with regards to DOC, POC or TSS. Calculations should be done for all water types for which the BWTS have been type approved, e.g. fresh water (< 1 PSU), brackish water (10 PSU to 20 PSU) and marine water (28 PSU to 36 PSU), unless the manufacturer can document that the energy consumption is independent of the salinity.

For both the nominal operational condition (nom) and maximum operational condition (max), the energy consumed is measured during ballast and the energy consumed is measured during de-ballast.

The measurement should be done on influent water with both a low (≤ 8°) and a higher (≥ 20°) temperature. The high temperature will reflect the normal operation conditions and the low temperature will reflect the maximum operational conditions.

6.3 Freshwater generator

6.3.1 General

The crew on board large ocean-going ships require freshwater for drinking, cooking, showering etc., and some equipment on board the ship can require technical freshwater. Installing a freshwater generator as an alternative to bunkering freshwater is the primary choice for larger ships.

The system consists of pumps and two or more heat exchangers in a vacuum vessel, enabling the evaporation of sea water at low temperature, and subsequent condensation of the distillate/freshwater.

The freshwater generators described in 6.3.3 require a heat source, which is often waste heat from an engine, but steam from boilers can also be a chosen thermal heat source. Freshwater generators that operate only on electricity are used mainly in the offshore industry and are not covered in this document.

© ISO 2024 – All rights reserved

Documents
Document Sharing Hub
Full document details: BS ISO 8933-2:2024

Depending on the integration of the systems on board the ship, a system can include a feedwater pump(s), freshwater pump(s) and/or ejector pump, if applicable. Hence, for comparison purposes, this document prescribes specific test conditions under which the system is to be tested.

Freshwater generators are typically operated periodically, and the produced freshwater is stored in tanks.

6.3.2 Definition of input and output

The input and output of a freshwater generator consists of the following:

— Input: Heat energy, electrical energy and sea water.

— Output: Distillate/freshwater, brine and heat loss (heating media and cooling water returns).

6.3.3 Definitions of boundaries and media

A freshwater generator requires an electrical supply and connections for the heat energy source (water or steam), seawater and freshwater. The boundaries are shown in Figure 6.3.

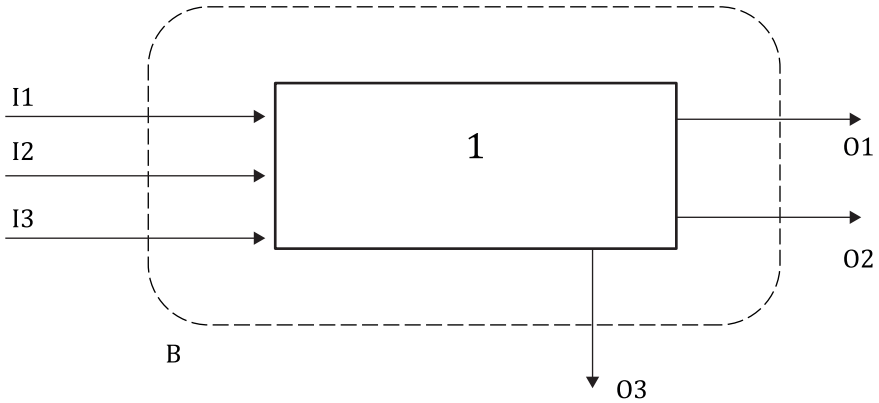

Key

B boundary

I1 electricity

I2 seawater, used both as feed water and cooling water

I3 thermal heat source (steam /hot water)

O1 freshwater

O2 brine

O3 heat loss (cooling water and outlet thermal heat source)

1 freshwater generator system

Figure 6.3 — Boundaries and input/output for a freshwater generator

6.3.4 Calculation method

6.3.4.1 General

The energy efficiency of a freshwater generator is determined by how much energy is used per kilo mass of produced fresh water. An energy rating requires an index ratio for the electrical efficiency as well as an index ratio for the thermal efficiency.

The method covers both the tubular type and the plate type fresh water generator.

© ISO 2024 – All rights reserved

Documents
Document Sharing Hub
Full document details: BS ISO 8933-2:2024

6.3.4.2 Electrical efficiency

Calculating the electrical EER (EER_{el}) is done by measuring the power consumption of specified electrical consumers, $\sum P_{el}$, while producing freshwater at its design mass flow rate, $q_{m\ design}$ and is hence expressed as shown in Formula (6.3):

$$EER_{el} = \frac{\sum P_{el}}{q_{m\ design}} \tag{6.3}$$

where

EER_{el} is the electrical EER at design flow, expressed in kJ/kg;

P_{el} is the power consumption as specified in Formula (6.4), expressed in kJ;

$q_{m\ design}$ is the design mass flow rate as specified in Formula (6.5), expressed in kg/s.

The main electricity consumers are pumps. The electricity consumption of a control system and associated valves will generally be insignificant and can be ignored in this document. In order to compare the EER_{el} among suppliers of freshwater generator systems, the following consumptions should be accounted for in Formula (6.4):

$$\sum P_{el} = P_{feedwater} + P_{cooling} + P_{ejecting} \tag{6.4}$$

where

$P_{feedwater}$ is the power consumed to provide feedwater to the system, expressed in kJ (1 kJ = $\frac{1}{3\,600}$ kWh);

$P_{cooling}$ is the power consumed to provide cooling water to condense the generated freshwater to a given temperature, expressed in kJ (1 kJ = $\frac{1}{3\,600}$ kWh);

$P_{ejecting}$ is the power consumed to eject/discharge brine, etc. from the system, expressed in kJ (1 kJ = $\frac{1}{3\,600}$ kWh).

Often the above functions are provided by one pump only, but to keep this document generic, Formula (6.4) has been provided. Even though pump(s) can be shared services on board the ship, the pump(s) should be accounted for in full to properly reflect the pressure loss of the system. The energy needed to pump the produced freshwater to its destination shall not be considered. It is also assumed that any pumping required to circulate the heating media is provided by existing systems on board the ship, and hence shall not be accounted for. In cases where these directions cannot be followed, it shall be stated that the EER_{el} result does not follow this document and a non-compliant EER_{el} shall be accompanied with information on which consumers have been accounted for.

The freshwater production capacity of a system is typically given in kilo per day (24 h). If a range is given, it should be the highest amount that forms the basis for determining $q_{m\ design}$. A freshwater generator does not normally operate on a continuous basis, but it should be able to deliver the amount promised and hence the mass flow for the calculation is established based on this promise.

$$q_{m\ design} = x \cdot \frac{1}{86{,}4} \tag{6.5}$$

where x is the maximum capacity for the given system, expressed in ton/day.

NOTE 1 1 ton = 1 000 kg.

NOTE 2 1 day = 86 400 s.

© ISO 2024 – All rights reserved

Documents
Document Sharing Hub
Full document details: BS ISO 8933-2:2024

It should be noted that if the capacity is given in cubic metres per day, the density of the produced freshwater, expressed in degrees Celsius shall be considered in the above establishment of $q_{m\ \mathrm{design}}$.

As an alternative, the EER in general can be reflected in kWh/ton, by using Formula (6.6):

$$EER_{\mathrm{alt}} = y \cdot \frac{1}{3{,}6} \tag{6.6}$$

where

EER_{alt} is the EER, expressed in kWh/ton;

y is the EER at design flow, expressed in kJ/kg.

NOTE 3 1 ton = 1 000 kg.

NOTE 4 1 kWh = 3 600 kJ.

6.3.4.3 Thermal efficiency

The thermal EER (EER_{th}) is calculated by measuring the heat consumed by the freshwater generator, $\dot{Q}_{\mathrm{heat}}$, while it is producing freshwater at its design mass flow, $q_{m\ \mathrm{design}}$, as defined by Formula (6.7):

$$EER_{\mathrm{th}} = \frac{\dot{Q}_{\mathrm{heat}}}{q_{\mathrm{m\ design}}} \tag{6.7}$$

where

EER_{th} is the thermal EER at design flow, expressed in kJ/kg (as an alternative, EER_{th} can be expressed in kWh/ton, see Formula (6.6));

$\dot{Q}_{\mathrm{heat}}$ is the heat consumed by the freshwater generator, expressed in kW.

The heat consumed is calculated as shown in Formula (6.8):

$$\dot{Q}_{\mathrm{heat}} = q_{\mathrm{m\ h}} \cdot c_{\mathrm{p}} \cdot \Delta T_{\mathrm{h}} \tag{6.8}$$

where

$q_{m\ \mathrm{h}}$ is the mass flow of heat source, expressed in kg/s;

c_{p} is the heat capacity of the heat source at constant pressure, expressed in kJ/kg K;

ΔT_{h} is the temperature difference of the heat source between the inlet and the outlet.

The product of $q_{m\ \mathrm{h}}$ and c_{p}, and the inlet and outlet temperatures above, shall be registered along with EER_{th}.

6.3.5 Measuring method

The parameter measurements required to calculate the EERs shall be performed while the freshwater generator is producing fresh water at the design mass flow rate, $q_{m\ \mathrm{design}}$, as defined by Formula (6.5).

Additionally, the sea water temperature and the surrounding air should correspond to a common reference such as normal ambient operational conditions, so the ratios can be compared between freshwater generators. The sea water mass flow should be measured to ensure it is kept at the design value, and the temperature and the mass flow of the heat source should be typical and noted as part of the rating, as it affects the efficiency.

© ISO 2024 – All rights reserved

Documents
Document Sharing Hub
Full document details: BS ISO 8933-2:2024

The following parameters shall be measured to establish the EERs:

— $\sum P_{\text{electrical}}$ is the power consumption, as defined in Formula (6.4), which is measured at each appropriate electrical consumer, preferably simultaneously, and summed up.

— $q_{m\,\text{h}}$ is the mass flow of the heat source, which is measured with a flow meter.

— $T_{\text{h,in}}$ is the temperature of the heat source at the inlet.

— $T_{\text{h,out}}$ is the temperature of the heat source at the outlet.

The following parameter shall be measured to ensure the standard reference is achieved:

— $T_{\text{sw,in}}$ is the seawater inlet temperature.

6.3.6 Example of measuring and calculations

This example applies to a freshwater generator designed for producing 29 500 kg (29,5 ton) of freshwater per day using hot water at 90 °C.

The design mass flow maintained throughout the testing is therefore in accordance with Formula (6.5):

$$q_{\text{m design}} = 29{,}5 \cdot \frac{1}{86{,}4} = 0{,}341 \text{ kg/s}$$

Under normal operational conditions, both the electrical consumptions have been registered:

$$\sum P_{\text{el}} = P_{\text{feedwater}} + P_{\text{cooling,ejecting}} = 5{,}62 + 0{,}87 = 6{,}49 \text{ kW}$$

In accordance with Formula (6.3):

$$EER_{\text{el}} = \frac{\sum P_{\text{el}}}{q_{\text{m design}}} = \frac{6{,}49}{0{,}341} = 19 \text{ kJ/kg}$$

In accordance with Formula (6.6), an alternative $EER_{\text{el,alt}}$ can be established:

$$EER_{\text{el,alt}} = 19 \cdot \frac{1}{3{,}6} = 5{,}28 \text{ kWh/ton}$$

NOTE 1 1 ton = 1 000 kg.

NOTE 2 1 kWH = 3 600 kJ.

$q_{m\,\text{h}}$ has been measured and averaged in the testing period at stable $q_{m\,\text{design}}$ to be 18 kg/s.

Inlet temperature is 90 °C and outlet temperature is 78,4 °C, giving a difference between inlet and outlet of ΔT_{h} = 11,6 K.

Using Formula (6.8):

$$\dot{Q}_{\text{h}} = 18 \cdot \bar{c}_p \cdot 11{,}6 = 810 \text{ kW}$$

Using $\bar{c}_{\text{p}}$ = 3,88 kJ/kg·K, for freshwater at 80 °C.

© ISO 2024 – All rights reserved

Documents
Document Sharing Hub
Full document details: BS ISO 8933-2:2024

In accordance with Formula (6.7):

$$EER_{\text{th}} = \frac{810}{0{,}341} = 2\,370 \text{ kJ / kg}$$

In accordance with Formula (6.6), an alternative $EER_{\text{th,alt}}$ can be established:

$$EER_{\text{th,alt}} = 810 \cdot \frac{1}{3{,}6} = 225 \text{ kWh / ton}$$

NOTE 3 1 ton = 1 000 kg.

NOTE 4 1 kWh = 3 600 kJ.

6.4 Seawater cooling system

6.4.1 General

The seawater cooling system consists of a cooling circuit where seawater is pumped continuously from the sea chest through a freshwater heat exchanger before it is discharged back to the sea.

The freshwater heat exchanger is the common component for both the seawater cooling system (see 6.4.2 to 6.4.6) and the freshwater cooling system (see 6.5).

6.4.2 Definition of input and output

The input and output of a seawater cooling system consists of the following:

— Input: Cold seawater and hot freshwater and electricity.

— Output: Hot seawater and cold freshwater.

6.4.3 Definitions of boundaries and media

The sea water cooling system and its boundaries are defined in Figure 6.4. This document describes the method for this 1:1 system (one pump:one cooler). In cases where any additional component is connected to the seawater pump, this component shall be deducted in the efficiency calculation.

© ISO 2024 – All rights reserved

Documents
Document Sharing Hub
Full document details: BS ISO 8933-2:2024

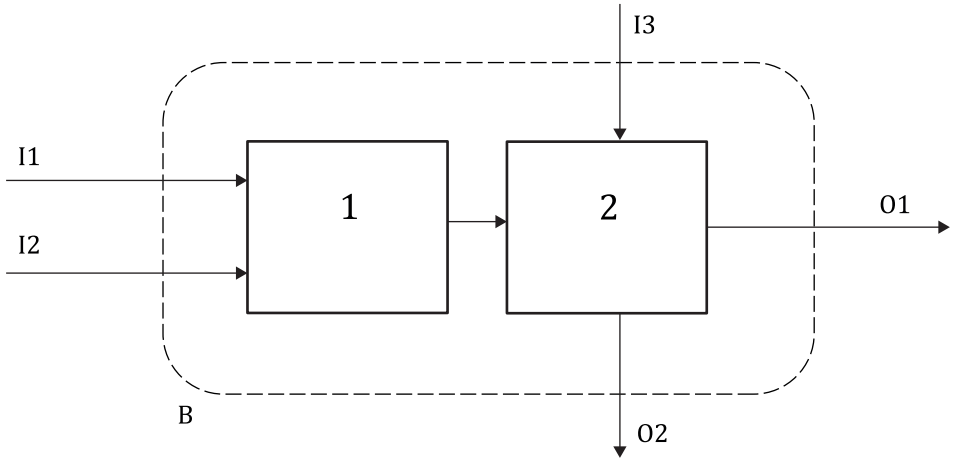

Key

B	boundary	1	seawater pump
I1	electricity	2	freshwater heat exchanger
I2	cold seawater		
I3	hot freshwater		
O1	hot seawater		
O2	cold freshwater		

Figure 6.4 — Definitions of boundaries for the seawater cooling system

6.4.4 Calculation method

The energy efficiency of the seawater cooling system is calculated as a ratio, EER_s, as shown in Formula (6.9):

$$EER_s = \frac{\dot{Q}_{s,out}}{P_{s,Actual}} \tag{6.9}$$

where

$\dot{Q}_{s,out}$ is the change in thermal energy after the cooling seawater passes through the heat exchanger, see Formula (6.10);

$P_{s,Actual}$ is the actual electrical power needed for pumping cooling seawater.

$$\dot{Q}_{s,out} = c_{p,s} \cdot q_{m\,s} \cdot \Delta T_s = c_{p,s} \cdot q_{m\,s} \cdot (T_{s,out} - T_{s,in}) \tag{6.10}$$

where

$c_{p,s}$ is the specific heat capacity (at constant pressure) of the cooling seawater, 20 °C and salinity 35 ‰, expressed in kJ/kg K;

$q_{m\,s}$ is the mass flow rate of the cooling seawater, expressed in kg/s;

$T_{s,out}$ is the temperature when the cooling seawater leaves the freshwater heat exchanger, expressed in °C;

$T_{s,in}$ is the temperature when the cooling seawater enters the freshwater heat exchanger, expressed in °C.

$q_{m\,s}$, $T_{s,out}$ and $T_{s,in}$ can be obtained by installing a flow sensor and a temperature sensor in the system.

© ISO 2024 – All rights reserved

Documents
Document Sharing Hub
Full document details: BS ISO 8933-2:2024

An alternative method to evaluate the energy performance of the system is to compare the actual power required by the seawater pump with the rated power for the seawater pump using a power ratio, η_{PR}, defined in Formula (6.11). The advantage of this method is that it requires fewer instruments to measure and is easy to calculate.

$$\eta_{PR} = \frac{P_{s,Actual}}{P_{s,Rated}} \tag{6.11}$$

where

$P_{s,Actual}$ is the actual electrical power needed for pumping cooling seawater;

$P_{s,Rated}$ is the rated power required for the seawater pump taken from the ship's "Electrical power table for EEDI" based on MEPC.364(79).[12]

The restriction of this method is that it is specific for the actual ship and can only be used to verify or evaluate the improvements of the ship itself.

6.4.5 Measuring method

The necessary measurements for this method are as follows:

— $q_{m\,s}$ is the mass flow rate of the cooling seawater, expressed in kg/s. This requires a flow meter in the seawater pipe. A temporary clamp-on flow meter may also be used.

— $T_{s,out}$ is the temperature when the cooling seawater leaves the heat exchange, expressed in °C. It is measured close to the heat exchanger outlet flange.

— $T_{s,in}$ is the temperature when the cooling seawater enters the cooler, expressed in °C. It is measured close to the heat exchanger inlet flange.

— $P_{s,Actual}$ is the actual power of the seawater pump by using a power meter mounted in the switchboard or a hand-held clamp meter for that specific power line, expressed in kW.

For the alternative method, the only measurement required is $P_{sActual}$.

6.4.6 Example of measuring and calculation

Measure and calculate $\dot{Q}_{s,out}$ by using Formula (6.10).

The specific heat capacity for seawater is found from conventional engineering tables: $c_{p,s}$ = 4,007 kJ/kgK.

The mass flow rate of seawater is measured: $q_{m\,s}$ = 103 kg/s (equal to 360 m^3/h with a density of 1 030 kg/m^3).

The seawater outlet temperature is measured: $T_{s,out}$ = 25 °C.

The seawater inlet temperature is measured: $T_{s,in}$ = 15 °C.

$$\dot{Q}_{s,out} = 4{,}007\ \text{kJ/kgK} \cdot 103\ \text{kg/s} \cdot (25\ °\text{C} - 15\ °\text{C}) = 4\ 127\ \text{kW}$$

$P_{s,Actual}$ is retrieved by reading the power from the seawater cooling pump by using a power meter: $P_{s,Actual}$ = 35 kW.

© ISO 2024 – All rights reserved

Documents
Document Sharing Hub
Full document details: BS ISO 8933-2:2024

The EER of the seawater cooling system can be calculated by using Formula (6.9):

$$EER_s = \frac{4\,127\ \text{kW}}{35\ \text{kW}} = 117{,}9$$

For the alternative method, $P_{s,Actual}$ is measured as 35 kW and $P_{s,Rated}$ is found from the "Electrical power table for EEDI" based on MEPC.364(79)[12] at 38 kW:

$$\eta_{PR} = \frac{P_{s,Actual}}{P_{s,Rated}} = \frac{35\ \text{kW}}{38\ \text{kW}} = 0{,}92$$

6.5 Freshwater cooling system

6.5.1 General

The freshwater cooling system is a cooling circuit where freshwater is continuously pumped in a closed loop to cool engine room machinery, fan coils, etc. When the freshwater is returning from the machinery, it is cooled down again by the freshwater heat exchangers.

The machinery refers to a set of different machines and equipment that require cooling.

The freshwater heat exchanger is the common component for both the freshwater cooling system, which is described in 6.5.2 to 6.5.6, and the seawater cooling system described in 6.4.

6.5.2 Definition of input and output

The input and output of a freshwater cooling system consists of the following:

— Input: Seawater and electricity.

— Output: Hot seawater.

6.5.3 Definitions of boundaries and media

The freshwater cooling system and its boundaries are defined in Figure 6.5.

© ISO 2024 – All rights reserved

Documents
Document Sharing Hub
Full document details: BS ISO 8933-2:2024

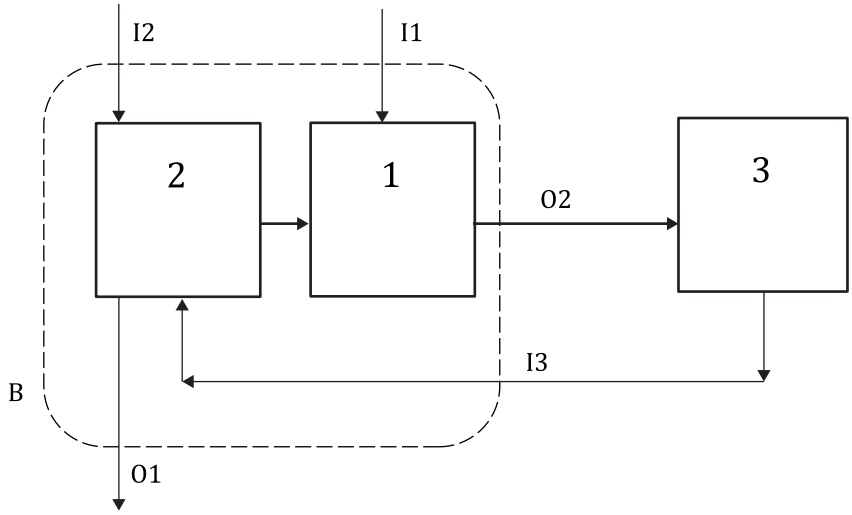

Key

B	boundary	1	seawater pump
I1	electricity	2	freshwater heat exchanger
I2	cold seawater	3	engine room machinery, fan coils, etc. (to be cooled)
I3	hot freshwater		
O1	hot seawater		
O2	cold freshwater		

Figure 6.5 — Definitions of boundaries for the freshwater cooling system

6.5.4 Calculation method

The energy efficiency of the freshwater cooling system is calculated as a ratio, EER_f, as shown in Formula (6.12):

$$EER_f = \frac{\dot{Q}_{f,out}}{P_{f,Actual}} \tag{6.12}$$

where

$\dot{Q}_{f,out}$ is the change in thermal energy after the cooling freshwater passes through the engine room machinery, see Formula (6.13);

$P_{f,Actual}$ is the actual electrical power needed for pumping cooling freshwater.

$$\dot{Q}_{f,out} = c_{p,f} \cdot q_{m\,f} \cdot \Delta T_f = c_{p,f} \cdot q_{m\,f} \cdot \left(T_{f,out} - T_{f,in}\right) \tag{6.13}$$

where

$c_{p,f}$ is the specific heat capacity (at constant pressure) of the cooling freshwater, 20 °C, expressed in kJ/kg K;

$q_{m\ f}$ is the mass flow rate of the cooling freshwater, expressed in kg/s;

$T_{f,out}$ is the temperature when the cooling freshwater leaves the engine room machinery, expressed in °C;

$T_{s,in}$ is the temperature when the cooling freshwater enters the engine room machinery, expressed in °C.

© ISO 2024 – All rights reserved

Documents
Document Sharing Hub
Full document details: BS ISO 8933-2:2024

$q_{m\,f}$, $T_{f,out}$ and $T_{f,in}$ can be obtained by installing a flow sensor and a temperature sensor in the system.

An alternative method to evaluate the energy performance of the system is to compare the actual power required by the fresh water pump with the rated power for the fresh water pump using a power ratio, η_{PR}, defined in Formula (6.14). The advantage of this method is that it requires fewer instruments to measure and is easy to calculate.

$$\eta_{PR\,f} = \frac{P_{f,Actual}}{P_{f,Rated}} \tag{6.14}$$

where

$P_{f,Actual}$ is the actual electrical power needed for pumping cooling freshwater;

$P_{f,Rated}$ is the rated power required for the freshwater cooling pump taken from the ship's "Electrical power table for EEDI" based on MEPC.364(79).[12]

The restriction of this method is that it is specific for the actual ship and can only be used to verify or evaluate the improvements of the ship itself.

6.5.5 Measuring method

The necessary measurements for this method are as follows:

— $q_{m\,f}$ is the mass flow rate of the cooling freshwater, expressed in kg/s. This requires a flow meter in the freshwater pipe. A temporary clamp-on flow meter may also be used.

— $T_{f,out}$ is the temperature when the cooling freshwater leaves the engine room machinery, expressed in °C. It is measured on the common pipe manifold upstream the freshwater pump.

— $T_{f,in}$ is the temperature when the cooling freshwater enters the engine room machinery, expressed in °C. It is measured on the common pipe manifold downstream the freshwater pump.

— $P_{f,Actual}$ is the actual power of the freshwater pump by using a power meter mounted in the switchboard or a hand-held clamp meter for that specific power line, expressed in kW.

For the alternative method, the only measurement required is $P_{fActual}$.

6.5.6 Example of measuring and calculation

Measure and calculate $\dot{Q}_{f,out}$ by using Formula (6.13).

The specific heat capacity for freshwater is found from a recognized engineering table: $c_{p,f}$ = 4,184 kJ/kgK.

The mass flow rate of freshwater is measured: $q_{m\,f}$ = 250 kg/s (equal to 900 m^3/h with a density of 1 000 kg/m^3).

The freshwater outlet temperature is measured: $T_{f,out}$ = 41 °C.

The freshwater inlet temperature is measured: $T_{f,in}$ = 36 °C.

$$Q_{f,out} = 4{,}184\ \text{kJ/kgK} \cdot 250\ \text{kg/s} \cdot (41\ °\text{C} - 36\ °\text{C}) = 5\ 230\ \text{kW}$$

$P_{f,Actual}$ is retrieved by reading the power from the freshwater cooling pump by using a power meter: $P_{f,Actual}$ = 78 kW.

© ISO 2024 – All rights reserved

Documents
Document Sharing Hub
Full document details: BS ISO 8933-2:2024