BS ISO 9096:2017

BSI Standards Publication

Stationary source emissions — Manual determination of mass concentration of particulate matter

Documents
Document Sharing Hub

Full document details: BS ISO 9096:2017

National foreword

This British Standard is the UK implementation of ISO 9096:2017. It supersedes BS ISO 9096:2003, which is withdrawn.

The UK participation in its preparation was entrusted to Technical Committee EH/2/1, Stationary source emission.

A list of organizations represented on this committee can be obtained on request to its secretary.

This publication does not purport to include all the necessary provisions of a contract. Users are responsible for its correct application.

© The British Standards Institution 2017
Published by BSI Standards Limited 2017

ISBN 978 0 580 93028 7

ICS 13.040.40

Compliance with a British Standard cannot confer immunity from legal obligations.

This British Standard was published under the authority of the Standards Policy and Strategy Committee on 30 September 2017.

Amendments/corrigenda issued since publication

Date	Text affected

Documents
Document Sharing Hub

Full document details: BS ISO 9096:2017

INTERNATIONAL STANDARD

ISO 9096

Third edition
2017-09

Stationary source emissions — Manual determination of mass concentration of particulate matter

Émissions de sources fixes — Détermination manuelle de la concentration en masse de poussières

Reference number
ISO 9096:2017(E)

Documents
Document Sharing Hub

© ISO 2017

Full document details: BS ISO 9096:2017

COPYRIGHT PROTECTED DOCUMENT

© ISO 2017, Published in Switzerland

All rights reserved. Unless otherwise specified, no part of this publication may be reproduced or utilized otherwise in any form or by any means, electronic or mechanical, including photocopying, or posting on the internet or an intranet, without prior written permission. Permission can be requested from either ISO at the address below or ISO's member body in the country of the requester.

ISO copyright office
Ch. de Blandonnet 8 • CP 401
CH-1214 Vernier, Geneva, Switzerland
Tel. +41 22 749 01 11
Fax +41 22 749 09 47
copyright@iso.org
www.iso.org

© ISO 2017 – All rights reserved

Documents
Document Sharing Hub

Full document details: BS ISO 9096:2017

Contents

Page

Foreword ... **v**
Introduction ... **vi**
1 Scope ... **1**
2 Normative references ... **1**
3 Terms and definitions ... **1**
4 Principle ... **4**
4.1 General ... 4
4.2 Interferences ... 5
5 Sampling plane and sampling points ... **5**
5.1 General ... 5
5.2 Sampling plane ... 6
5.3 Requirements for sampling points ... 6
5.4 Minimum number and location of sampling points ... 6
5.5 Access ports ... 7
5.6 Sampling time ... 7
6 Apparatus and materials ... **8**
6.1 Gas velocity, temperature, pressure, and gas composition measurement devices ... 8
6.2 Sampling apparatus ... 8
6.3 Material for particulate matter recovery ... 14
6.4 Apparatus for conditioning and weighing ... 14
7 Sampling and weighing procedures ... **15**
7.1 General aspects ... 15
7.2 Weighing procedure ... 16
7.2.1 Parts to be weighed ... 16
7.2.2 Pre-sampling treatment of weighed parts ... 16
7.2.3 Weighing ... 16
7.2.4 Post-sampling treatment of weighed parts ... 17
7.2.5 Post-sampling treatment of the rinsing solutions ... 17
7.3 Sampling ... 18
7.3.1 Preparation ... 18
7.3.2 Pre-measurements ... 18
7.3.3 Calculating the nozzle diameter ... 18
7.3.4 Overall blank ... 20
7.3.5 Sampling procedure ... 20
7.3.6 Recovery of deposits upstream of the filter ... 21
7.4 Validation of results ... 21
7.4.1 Parameters depending on the stationary source ... 21
7.4.2 Leak check ... 21
7.4.3 Isokinetic flowrate ... 22
7.4.4 Deposits of dust on non-weighed parts upstream of the filter ... 22
7.4.5 Validation of sample collection ... 22
7.4.6 Summary of the requirements of this document ... 22
8 Additional aspects ... **22**
8.1 Thermal behaviour of particulate matter ... 22
8.2 Particulate deposits upstream of the filter ... 24
8.3 Improvement of the weighing procedure ... 24
9 Calculations ... **25**
9.1 Isokinetic flowrate ... 25
9.2 Dust concentration ... 25
9.2.1 General ... 25
9.2.2 Oxygen correction factor ... 26

© ISO 2017 – All rights reserved

AVA Documents
Document Sharing Hub
Full document details: BS ISO 9096:2017

9.2.3 Carbon dioxide correction factor ... 26

10 Performance characteristics ... 26
10.1 General aspects ... 26
10.2 Experimental data for sampling ... 27

11 Test report ... 27

Annex A (normative) **Proven design of the entry nozzle ... 29**

Annex B (normative) **Determination of positions of sampling points in circular and rectangular ducts ... 30**

Annex C (informative) **Examples of weighing bias ... 34**

Annex D (informative) **Isokinetic sampling conditions ... 36**

Annex E (informative) **Summary validation information ... 38**

Annex F (informative) **Examples of suitable access ports for sampling equipment ... 41**

Bibliography ... 43

© ISO 2017 – All rights reserved

Documents
Document Sharing Hub
Full document details: BS ISO 9096:2017

Foreword

ISO (the International Organization for Standardization) is a worldwide federation of national standards bodies (ISO member bodies). The work of preparing International Standards is normally carried out through ISO technical committees. Each member body interested in a subject for which a technical committee has been established has the right to be represented on that committee. International organizations, governmental and non-governmental, in liaison with ISO, also take part in the work. ISO collaborates closely with the International Electrotechnical Commission (IEC) on all matters of electrotechnical standardization.

The procedures used to develop this document and those intended for its further maintenance are described in the ISO/IEC Directives, Part 1. In particular the different approval criteria needed for the different types of ISO documents should be noted. This document was drafted in accordance with the editorial rules of the ISO/IEC Directives, Part 2 (see www.iso.org/directives).

Attention is drawn to the possibility that some of the elements of this document may be the subject of patent rights. ISO shall not be held responsible for identifying any or all such patent rights. Details of any patent rights identified during the development of the document will be in the Introduction and/or on the ISO list of patent declarations received (see www.iso.org/patents).

Any trade name used in this document is information given for the convenience of users and does not constitute an endorsement.

For an explanation on the voluntary nature of standards, the meaning of ISO specific terms and expressions related to conformity assessment, as well as information about ISO's adherence to the World Trade Organization (WTO) principles in the Technical Barriers to Trade (TBT) see the following URL: www.iso.org/iso/foreword.html.

This document was prepared by ISO Technical Committee ISO/TC 146, *Air quality*, Subcommittee SC 1, *Stationary source emissions*.

This third edition cancels and replaces the second edition (ISO 9096:2003), of which it constitutes a minor revision. It also incorporates the Technical Corrigendum ISO 9096:2003/Cor.1:2006. The changes compared to the previous edition are as follows:

— Table 3: in the row entitled "Isokinetic criteria (average measurement uncertainty)" the value "±10 %" has been replaced by "$^{+15}_{-5}$ %" (according to ISO 9096:2003/Cor.1:2006).

— Formula (11): the percent symbol has been added twice.

— Formula (13): the percent symbol has been added twice.

— Figure A.2: < 0,2 has been corrected to > 0,2.

— Formula (B.6): the parentheses have been removed.

— Formula (B.7): the formula has been corrected.

© ISO 2017 – All rights reserved

Documents
Document Sharing Hub
Full document details: BS ISO 9096:2017

Introduction

Close liaison and cooperation between ISO/TC 146/SC 1 and CEN/TC 264 has resulted in the preparation of this document, ISO 12141 and EN 13824-1. This document is similar to EN 13284-1 with additional emphasis given on the use of high-volume sampling techniques. A representative, integrated sample is extracted from the flue gas and the particulate matter entrained in the gas sample is separated by a filter. The pre-weighed filter is subsequently dried and weighed. A relative increase in the mass is attributed to the collection of particulate matter on the filter.

To meet the specifications of this document, the particulate sample is weighed to a specified level of accuracy. This level of accuracy is achieved by:

a) exercising extreme care in weighing, in accordance with the procedures of this document;

b) extending the sampling time at conventional sampling rates;

c) sampling at higher rates for conventional sampling times (high-volume sampling);

d) recovering all dust upstream of the filter.

© ISO 2017 – All rights reserved
Documents
Document Sharing Hub
Full document details: BS ISO 9096:2017

Stationary source emissions — Manual determination of mass concentration of particulate matter

1 Scope

This document describes a reference method for the measurement of particulate matter (dust) concentration in waste gases of concentrations from 20 mg/m^3 to 1 000 mg/m^3 under standard conditions.

This document is applicable to the calibration of automated monitoring systems (AMS). If the emission gas contains unstable, reactive or semi-volatile substances, the measurement will depend on the filtration temperature. In-stack methods can be more applicable than out-stack methods for the calibration of automated monitoring systems.

2 Normative references

The following documents are referred to in the text in such a way that some or all of their content constitutes requirements of this document. For dated references, only the edition cited applies. For undated references, the latest edition of the referenced document (including any amendments) applies.

ISO 5725 (all parts), *Accuracy (trueness and precision) of measurement methods and results*

ISO 10780, *Stationary source emissions — Measurement of velocity and volume flowrate of gas streams in ducts*

3 Terms and definitions

For the purposes of this document, the following terms and definitions apply.

ISO and IEC maintain terminological databases for use in standardization at the following addresses:

— ISO Online browsing platform: available at http://www.iso.org/obp

— IEC Electropedia: available at http://www.electropedia.org/

3.1
particulate matter
dust
particles, of any shape, structure or density, dispersed in the gas phase under the sampling conditions

Note 1 to entry: In the method described, all the compounds that may be collected by filtration under specified conditions after representative sampling of the gas to be analysed, and which remain upstream of the filter and on the filter after drying under specified conditions, are considered to be dust (or particulate matter). However, for the purposes of some national standards, the definition of particulate matter can extend to condensibles or reaction products collected under specified conditions (e.g. temperatures lower than the flue gas temperature).

Note 2 to entry: This method restricts the definition of particulate matter to that material collected in the sampling system on and before a filter, under specified temperature conditions. Procedures for the measurement of secondary particulate matter (condensible materials) formed and collected after the filter are not within the scope of this document.

3.2
filtration temperature
temperature of the sampled gas immediately downstream of the filter

© ISO 2017 – All rights reserved

Documents
Document Sharing Hub
Full document details: BS ISO 9096:2017

3.3
in-stack filtration
filtration in the duct with the filter in its filter holder placed immediately downstream of the sampling nozzle

3.4
out-stack filtration
filtration outside of the duct with the filter in its heated filter holder placed downstream of the sampling nozzle and the suction tube (sampling probe)

3.5
isokinetic sampling
sampling at a flowrate such that the velocity and direction of the gas entering the sampling nozzle, v_n, are the same as that of the gas in the duct at the sampling points, v_s

Note 1 to entry: See Figure 1 and Annex D.

Note 2 to entry: The velocity ratio, v_n/v_s, expressed as a percentage characterizes the deviation from isokinetic sampling.

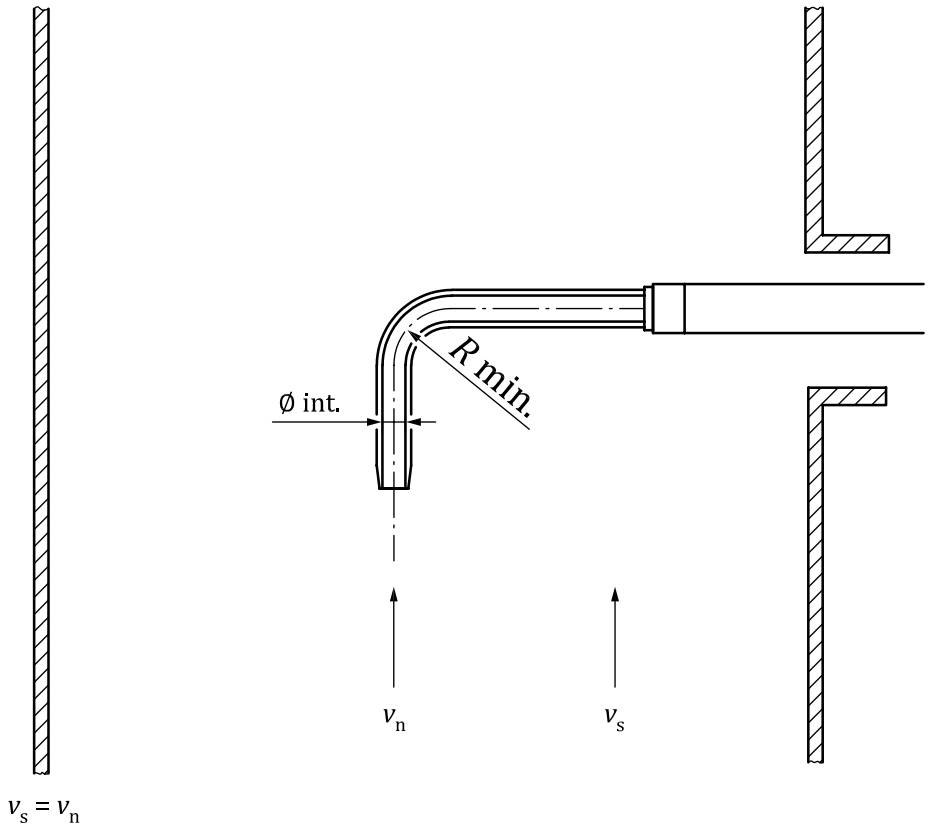

Key

v_s stack gas velocity

v_n velocity in the nozzle

Figure 1 — Isokinetic sampling

© ISO 2017 – All rights reserved
Documents
Document Sharing Hub
Full document details: BS ISO 9096:2017

3.6
hydraulic diameter
d_h
characteristic dimension of a duct cross-section

$$d_h = \frac{4 \times A_s}{l_s} \tag{1}$$

where

A_s is the cross-sectional area of the sampling plane;

l_s is the length of the perimeter of the sampling plane.

3.7
sampling plane
plane normal to the centreline of the duct at the sampling position

Note 1 to entry: See Figure 2.

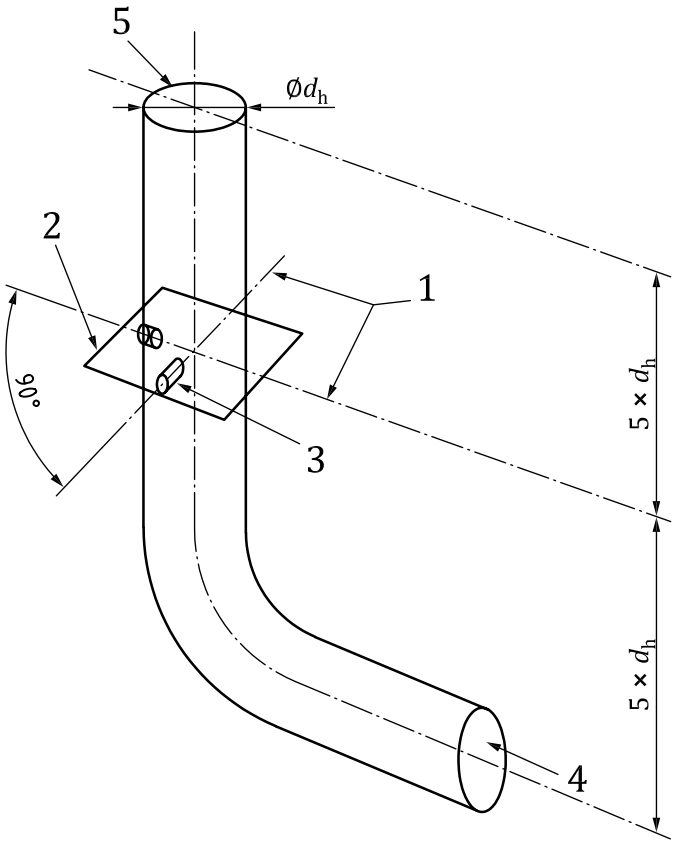

Key
1 sampling lines
2 sampling plane
3 access port
4 flow
5 top of duct

Figure 2 — Illustration of definitions in relation to a circular duct

© ISO 2017 – All rights reserved

Documents
Document Sharing Hub
Full document details: BS ISO 9096:2017

3.8
sampling line
line in the *sampling plane* (3.7) along which *sampling points* (3.9) are located, bounded by the inner duct wall

Note 1 to entry: See Figure 2.

3.9
sampling point
specific position on a *sampling line* (3.8) at which a sample is extracted

3.10
standard conditions
gas pressure and temperature constants and conditions to which volumetric calculations are referred

Note 1 to entry: For the purposes of this document, standard conditions are 101,325 kPa rounded to 101,3 kPa; 273,15 K rounded to 273 K; dry gas.

3.11
overall blank
test sample taken at the plant site in an identical manner to the normal samples in the series, except that no gas is sampled during the test duration

Note 1 to entry: The measured mass variation provides an estimation of the uncertainties. The overall blank value, divided by the average sampling volume of the measurement series, provides an estimation of the detection limit (milligrams per cubic metre) of the whole measurement process, as carried out by the operator. The overall blank includes possible deposits on the filter and on all parts upstream.

3.12
weighing control procedures
quality control procedures utilized for detecting/correcting apparent mass variations due to climatic or environmental changes between pre- and post-sampling weighing series

Note 1 to entry: In these procedures, control parts are used (see 7.2) which are identical to those to be weighed for dust measurement and are pre-treated under the same conditions of temperature and humidity. The control parts are kept free from dust contamination.

3.13
measurement series
successive measurements carried out in the same *sampling plane* (3.7), and under the same process conditions

3.14
limit value
dust concentration that is permitted by authorities for the plant process (i.e. average limit value)

Note 1 to entry: For purposes other than regulatory uses, the measurement value is compared to a stated reference value.

4 Principle

4.1 General

A sample stream of the gas is extracted from the main gas stream at specified sampling points for a measured period of time, with an isokinetic, controlled flowrate. The volume of gas collected is measured, and a pre-weighed filter, which is then dried and reweighed, separates the particulate matter (dust) entrained in the gas sample. Deposits upstream of the filter in the sampling equipment are also recovered and weighed. The increase in mass of the filter and the mass deposited upstream of the filter is attributed to particulate matter collected from the sampled gas. The ratio of the mass of the

© ISO 2017 – All rights reserved
Documents
Document Sharing Hub
Full document details: BS ISO 9096:2017

particulate matter collected to the volume of gas collected allows the flue gas particulate concentration to be calculated.

Valid measurements can be achieved only when:

a) an adequate quantity of dust is collected during the sampling, which is at least 5 times the corresponding overall blank value;

b) the gas stream in the duct at the sampling location has a sufficiently steady and identified velocity, temperature and pressure, and a sufficiently homogeneous composition;

c) the flow of gas is parallel to the axis of the nozzle;

d) sampling is carried out without disturbance of the gas stream, using a sharp-edged nozzle facing into the stream;

e) isokinetic sampling conditions are maintained throughout the test;

f) samples are taken at a preselected number of stated positions in the sampling plane to obtain a representative sample for a non-uniform distribution of particulate matter in the duct or stack;

g) the sampling train is designed and operated to avoid condensation and to be leak-free;

h) calibration criteria are met;

i) sampling blank and leak-check criteria are met;

j) dust deposits upstream of the filter are recovered and/or taken into account;

k) the sampling and weighing procedures are adapted to the expected dust quantities as specified in this document.

4.2 Interferences

a) Positive interference

Gaseous species present in stack gases that are capable of reacting to form particulate matter within the sample train can result in positive interference. Examples include the potential reaction of sulfur dioxide (SO_2) to an insoluble sulfate compound in the high-humidity portion of the system, such as with limestone in flue gas following a wet flue-gas desulfurization system (FGDS) to form calcium sulfate ($CaSO_4$), or the reaction with ammonia gas (NH_3) to form ammonium sulfate (NH_4SO_4) [see 7.1 a)].

b) Negative interference

1) Certain acid gaseous species can erode the filter material, resulting in negative interference. For example, the reaction of hydrogen fluoride (HF) with glass components in the sample train (see 6.2.5).

2) Volatile matter existing in solid or liquid form in the stack gas may vaporize after collection on the sample train filtration material, due to continued exposure to the hot sample stream during the sampling period. This would result in a negative interference (see 8.1).

5 Sampling plane and sampling points

5.1 General

Representative sampling is possible when a suitable location is available, having a sufficiently homogeneous gas velocity at the sampling plane.

© ISO 2017 – All rights reserved

Documents
Document Sharing Hub
Full document details: BS ISO 9096:2017

Sampling shall be carried out at a sufficient number of sampling points, usually located on several sampling lines. Convenient access ports and a working platform shall be available for the testing.

5.2 Sampling plane

The sampling plane shall be situated in a length of straight duct (preferably vertical) with a constant shape and cross-sectional area. The sampling plane shall be as far downstream and upstream as possible from any obstruction that can cause a disturbance and produce a change in the direction of flow (disturbances caused by, for example, bends, fans or pollution abatement equipment).

5.3 Requirements for sampling points

Preliminary measurements at all the sampling points defined in 5.4 and Annex B shall prove that the gas stream in the sampling plane meets the following requirements:

a) the angle of gas flow is less than 15° with regard to the duct axis (a recommended method for estimation is indicated in ISO 10780:1994, Annex C);

b) no local negative flow is present;

c) the minimum velocity is higher than the detection limit of the method used for the flowrate measurement (for Pitot tubes, a differential pressure larger than 5 Pa);

d) the ratio of the highest to lowest local gas velocities is less than 3:1.

If the above requirements cannot be met, the uncertainty is higher than that specified by this document and the sampling location is not in compliance with this document (see 7.4.6).

The above requirements are generally met in sections of duct with at least five hydraulic diameters of straight duct upstream of the sampling plane and at least two hydraulic diameters downstream. (If the sampling plane is to be located near the stack exit, it should be no less than five hydraulic diameters from the exit.) Therefore, it is strongly recommended that sampling locations be selected accordingly.

5.4 Minimum number and location of sampling points

The dimensions of the sampling plane dictate the minimum number of sampling points. In general, this number increases as the duct dimensions increase.

Tables 1 and 2 give the minimum number of sampling points to be used for circular and rectangular ducts respectively. The sampling points shall be located at the centres of equal areas in the sampling plane (in accordance with Annex B).

Sampling points shall not be located within 3 % of the sampling line length (if d > 1,5 m) or 5 cm (if d < 1,5 m) from the inner duct wall. Choose the inner edge of the area when calculations result in sampling point positions within this area. This may arise when selecting more than the minimum numbers of sampling points presented in Tables 1 and 2, for example in cases of unusual duct shape.

NOTE When the requirements for the sampling plane (see 5.2) cannot be met, it is sometimes possible to improve representative sampling by increasing the number of sampling points above those specified in Tables 1 and 2. See also 7.3.2 for sampling-point premeasurement procedures.

© ISO 2017 – All rights reserved
Documents
Document Sharing Hub
Full document details: BS ISO 9096:2017

Table 1 — Minimum number of sampling points for circular ducts

Range of duct diameters m	Minimum number of sampling lines (diameters)	Minimum number of sampling points per line		Minimum number of sampling points per plane	
		including centre point	excluding centre point	including centre point	excluding centre point
< 0,35	—	1[a]	—	1[a]	—
0,35 to 0,70	2	3	2	5	4
0,70 to 1,00	2	5	4	9	8
1,00 to 2,00	2	7	6	13	12
> 2,00	2	9	8	17	16

[a] Using only one sampling point can give rise to errors greater than those specified in this document.

Table 2 — Minimum number of sampling points for rectangular ducts

Range of sampling plane areas m^2	Minimum number of side divisions[a]	Minimum number of sampling points per plane
< 0,09	—	1[b]
0,09 to 0,38	2	4
0,38 to 1,50	3	9
> 1,50	4	16

[a] Other side divisions can be necessary, for example if the longest duct side length is more than twice the length of the shortest side.

[b] Using only one sampling point can give rise to errors greater than those specified in this document.

5.5 Access ports

Ports shall be provided for access to the sampling points selected in accordance with Annex B.

The port dimensions shall provide space for the insertion and removal of the sampling equipment and associated devices, and allow for sealing once the sampling equipment is in place. A minimum diameter of 125 mm or a surface area of 100 mm × 250 mm are recommended, except for small ducts (less than 0,7 m diameter) for which the port size needs to be smaller (see Annex F for examples).

5.6 Sampling time

Assuming a volumetric flowrate characteristic of the sampling train to be used, a sampling time can be calculated that will lead to the collection of a desired or required mass of particulate matter if the approximate particulate concentration is known previously.

If the expected dust concentration, c_{exp} has been previously determined or assumed, and the mass of particulate matter, m, to be collected is required or set, then the necessary volume of the flue gas to be sampled is:

$$V_n = \frac{m}{c_{exp}} \tag{2}$$

However, the volume of the sample, V_n (litres), will be equal to the total sampling time, t (min), multiplied by the nozzle volumetric flowrate under actual conditions, Q_a (l/min), i.e. $V_n = tQ_a$.

The total sampling time in the sampling plane is thus estimated to be:

$$t = \frac{V_n}{Q_a} \quad \text{or} \quad t = \frac{m}{c_{exp} \cdot Q_a} \tag{3}$$

© ISO 2017 – All rights reserved

Documents
Document Sharing Hub
Full document details: BS ISO 9096:2017

6 Apparatus and materials

6.1 Gas velocity, temperature, pressure, and gas composition measurement devices

Velocity measurements shall be carried out using standard Pitot tubes or other measurement devices, e.g. S-Type Pitot tubes, provided they are calibrated against standardized Pitot tubes in accordance with ISO 10780.

The temperature and the pressure in the duct shall be measured in order to calculate the actual density of the gas within ±0,05 kg/m^3, also taking the gas composition into account.

When expressing dust concentrations on a dry basis, and/or where the concentrations are to be expressed in relation to a reference oxygen or CO_2 concentration, humidity (moisture) and/or oxygen/CO_2 measurements shall be carried out in the vicinity of the sampling plane.

Specifications for this apparatus are given in Table 3.

6.2 Sampling apparatus

6.2.1 Sampling train.

The sampling train consists principally of

a) a suction tube (sampling probe) with entry nozzle,

b) a filter housing, including a filter support and a filter, either located in the duct (in-stack filtration), or placed outside the duct (out-stack filtration), leading to slightly different kinds of sampling trains. In the presence of water droplets, out-stack filtration shall be used,

c) a suction unit, with a gas metering system.

6.2.2 Filtration device.

a) **In-stack filtration devices** (Figure 3): the part of the tubing between the nozzle and the filter shall be very short, to minimize dust deposits upstream of the filter. The tubing after the filter (suction tube) shall be of sufficient length to traverse the duct at the required sampling points. Since the filtration temperature is generally identical to that of the gas in the duct, filter clogging can occur if the gas contains water droplets.

   To allow traversing of the duct, a leak-free, rigid tube (support tube) of sufficient length is used downstream of the filter housing for mechanical support of the nozzle and filter housing;

© ISO 2017 – All rights reserved
Documents
Document Sharing Hub
Full document details: BS ISO 9096:2017

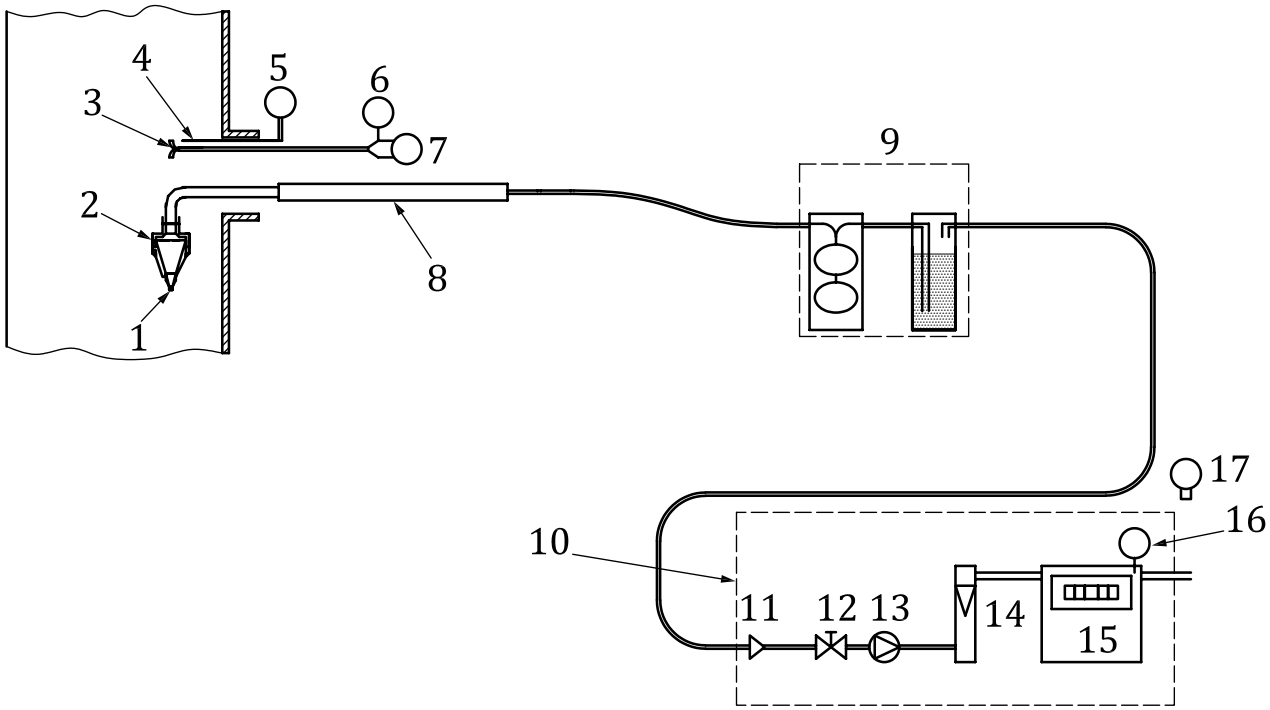

Key

1 entry nozzle
2 filter holder
3 Pitot tube
4 temperature probe
5 temperature measurement
6 static pressure measurement
7 differential pressure measurement
8 support tube (in-stack device)
9 cooling and drying system
10 suction unit and gas-metering device
11 shut-off valve
12 adjustment valve
13 pump
14 flowmeter
15 dry gas volume meter
16 temperature measurement
17 barometer

Figure 3 — Example of sampling on a dry basis with an in-stack filter

b) **Out-stack filtration devices** (Figure 4): the part of the tubing between the nozzle and the filter (suction tube) has to be of sufficient length to traverse the duct at the required sample points. The suction tube and the filter housing is temperature-controlled, to provide vaporization of possible water droplets and avoid filtration difficulties related to acid gases having high dew points.

© ISO 2017 – All rights reserved

Documents
Document Sharing Hub
Full document details: BS ISO 9096:2017