BS ISO 9221:2024

BSI Standards Publication

Furniture — Children's high chairs — Safety requirements and test methods

Documents
Document Sharing Hub

Full document details: BS ISO 9221:2024

National foreword

This British Standard is the UK implementation of ISO 9221:2024.

The UK participation in its preparation was entrusted to Technical Committee FW/0/2, Domestic and Contract Furniture.

A list of organizations represented on this committee can be obtained on request to its committee manager.

Contractual and legal considerations

This publication has been prepared in good faith, however no representation, warranty, assurance or undertaking (express or implied) is or will be made, and no responsibility or liability is or will be accepted by BSI in relation to the adequacy, accuracy, completeness or reasonableness of this publication. All and any such responsibility and liability is expressly disclaimed to the full extent permitted by the law.

This publication is provided as is, and is to be used at the recipient's own risk.

The recipient is advised to consider seeking professional guidance with respect to its use of this publication.

This publication is not intended to constitute a contract. Users are responsible for its correct application.

© The British Standards Institution 2024
Published by BSI Standards Limited 2024

ISBN 978 0 539 25504 1

ICS 97.140

Compliance with a British Standard cannot confer immunity from legal obligations.

This British Standard was published under the authority of the Standards Policy and Strategy Committee on 31 December 2024.

Amendments/corrigenda issued since publication

Date	Text affected

Documents
Document Sharing Hub

Full document details: BS ISO 9221:2024

International Standard

ISO 9221

First edition
2024-11

Furniture — Children's high chairs — Safety requirements and test methods

Ameublement — Chaises hautes pour enfants — Exigences de sécurité et méthodes d'essai

Reference number
ISO 9221:2024(en)

© ISO 2024

Documents
Document Sharing Hub

Full document details: BS ISO 9221:2024

COPYRIGHT PROTECTED DOCUMENT

© ISO 2024

All rights reserved. Unless otherwise specified, or required in the context of its implementation, no part of this publication may be reproduced or utilized otherwise in any form or by any means, electronic or mechanical, including photocopying, or posting on the internet or an intranet, without prior written permission. Permission can be requested from either ISO at the address below or ISO's member body in the country of the requester.

ISO copyright office
CP 401 • Ch. de Blandonnet 8
CH-1214 Vernier, Geneva
Phone: +41 22 749 01 11
Email: copyright@iso.org
Website: www.iso.org

Published in Switzerland

Documents
Document Sharing Hub

Full document details: BS ISO 9221:2024

Contents

Page

Foreword ... **v**
Introduction ... **vi**
1 Scope ... **1**
2 Normative references ... **1**
3 Terms and definitions ... **1**
4 General ... **2**
4.1 Test conditions ... 2
4.2 Application of forces ... 3
4.3 Tolerances ... 3
4.4 Test sequence ... 3
4.5 Determination of the junction line ... 3
5 Test equipment ... **5**
6 Chemical hazards (see Clause A.2) ... **12**
6.1 General ... 12
6.2 Requirements ... 12
6.2.1 General ... 12
6.2.2 Sampling ... 13
6.3 Migration of certain elements ... 13
6.4 Phthalates ... 13
6.5 Azo colorants ... 14
6.6 Flame retardants ... 15
7 Thermal hazards (see Clause A.3) ... **15**
8 Mechanical hazards (see Clause A.4) ... **16**
8.1 Hazards caused by foldable products ... 16
8.1.1 Requirements ... 16
8.1.2 Test methods ... 16
8.2 Hazards caused by height adjustment ... 17
8.2.1 General ... 17
8.2.2 Incomplete seat height adjustment ... 17
8.2.3 Unintentional release of the seat height adjustment mechanism ... 17
8.3 Entrapment hazards (see A.4.1) ... 17
8.3.1 Entrapment of fingers ... 17
8.3.2 Entrapment of head ... 17
8.4 Hazards caused by moving parts (see A.4.2) ... 18
8.4.1 Requirements on compression points ... 18
8.4.2 Requirements for shearing points ... 18
8.5 Entanglement hazards (see A.4.3) ... 18
8.5.1 Requirements ... 18
8.5.2 Test method ... 19
8.6 Choking and ingestion hazards (see A.4.4) ... 19
8.6.1 Requirements ... 19
8.6.2 Test methods ... 20
8.7 Hazards caused by edges, corners and protruding parts (see A.4.6) ... 21
8.8 Strength and durability hazards, and structural integrity (see A.4.7) ... 21
8.8.1 Requirements ... 21
8.8.2 Impact test ... 21
8.8.3 Seat vertical static load test ... 22
8.8.4 Footrest vertical static load test ... 22
8.8.5 Dynamic strength test ... 22
8.8.6 Tray tests ... 23
8.9 Hazards from falls out of the high chair (see A.4.8) ... 24
8.9.1 Restraint system ... 24

© ISO 2024 – All rights reserved

Documents
Document Sharing Hub
Full document details: BS ISO 9221:2024

8.9.2 Lateral protection ... 29
8.9.3 Backrest ... 31
8.10 Suffocation hazards (see A.4.5) ... 32
8.11 Castors/wheels (see A.4.9) ... 33
8.11.1 General requirements ... 33
8.11.2 Test methods ... 33
8.11.3 Requirements for parking device ... 34
8.11.4 Test methods for lockable castors/wheels ... 34
8.12 Stability (see A.4.10) ... 35
8.12.1 Requirements ... 35
8.12.2 Stability tests ... 35

9 Marking and product information ... 38
9.1 General ... 38
9.2 Marking ... 38
9.2.1 Requirements ... 38
9.2.2 Packaging warning ... 38
9.2.3 Durability of marking ... 39
9.2.4 Test method for durability of marking ... 39
9.3 Instructions for use ... 39
9.4 Purchase information ... 40

Annex A (informative) **Rationale ... 41**

Bibliography ... 45

© ISO 2024 – All rights reserved

Documents
Document Sharing Hub
Full document details: BS ISO 9221:2024

Foreword

ISO (the International Organization for Standardization) is a worldwide federation of national standards bodies (ISO member bodies). The work of preparing International Standards is normally carried out through ISO technical committees. Each member body interested in a subject for which a technical committee has been established has the right to be represented on that committee. International organizations, governmental and non-governmental, in liaison with ISO, also take part in the work. ISO collaborates closely with the International Electrotechnical Commission (IEC) on all matters of electrotechnical standardization.

The procedures used to develop this document and those intended for its further maintenance are described in the ISO/IEC Directives, Part 1. In particular, the different approval criteria needed for the different types of ISO document should be noted. This document was drafted in accordance with the editorial rules of the ISO/IEC Directives, Part 2 (see www.iso.org/directives).

ISO draws attention to the possibility that the implementation of this document may involve the use of (a) patent(s). ISO takes no position concerning the evidence, validity or applicability of any claimed patent rights in respect thereof. As of the date of publication of this document, ISO had not received notice of (a) patent(s) which may be required to implement this document. However, implementers are cautioned that this may not represent the latest information, which may be obtained from the patent database available at www.iso.org/patents. ISO shall not be held responsible for identifying any or all such patent rights.

Any trade name used in this document is information given for the convenience of users and does not constitute an endorsement.

For an explanation of the voluntary nature of standards, the meaning of ISO specific terms and expressions related to conformity assessment, as well as information about ISO's adherence to the World Trade Organization (WTO) principles in the Technical Barriers to Trade (TBT), see www.iso.org/iso/foreword.html.

This document was prepared by Technical Committee ISO/TC 136, *Furniture*.

This first edition cancels and replaces ISO 9221-1:2015 and ISO 9221-2:2015, which have been merged into one single document and technically revised.

The main changes are as follows:

— complete review of the document in a hazard base format;

— addition of chemical and thermal hazards in Clauses 6 and 7, respectively;

— addition of a dynamic strength test in 8.8.5;

— inclusion of specific requirements for high chairs with more than two castors/wheels in 8.11.1;

— improvement of restraint system requirements to require a passive crotch restraint for products with a horizontal component in front of the baby in 8.9.1.1.

Any feedback or questions on this document should be directed to the user's national standards body. A complete listing of these bodies can be found at www.iso.org/members.html.

© ISO 2024 – All rights reserved

Documents
Document Sharing Hub
Full document details: BS ISO 9221:2024

Introduction

This document has been prepared in order to specify requirements and test methods intended to minimize accidents to children resulting from normal use and reasonably foreseeable misuse of children's high chairs.

The test methods are designed to evaluate properties without regard to materials, design/construction or manufacturing processes.

© ISO 2024 – All rights reserved

Documents
Document Sharing Hub
Full document details: BS ISO 9221:2024

Furniture — Children's high chairs — Safety requirements and test methods

1 Scope

This document specifies safety requirements for free-standing children's high chairs that elevate children to dining table height, usually for the purposes of feeding or eating. Children's high chairs are for children up to three years of age who are capable of sitting unaided.

This document is applicable to children's high chairs for domestic and non-domestic use. It does not apply to special high chairs for medical purposes.

NOTE If a children's high chair is or can be converted into other functions, additional standards can apply.

2 Normative references

The following documents are referred to in the text in such a way that some or all of their content constitutes requirements of this document. For dated references, only the edition cited applies. For undated references, the latest edition of the referenced document (including any amendments) applies.

ISO 48-4, *Rubber, vulcanized or thermoplastic — Determination of hardness — Part 4: Indentation hardness by durometer method (Shore hardness)*

ISO 8124-2:2023, *Safety of toys — Part 2: Flammability*

ISO 8124-3, *Safety of toys — Part 3: Migration of certain elements*

ISO 8124-6, *Safety of toys — Part 6: Certain phthalate esters*

ISO 14362-1, *Textiles — Methods for determination of certain aromatic amines derived from azo colorants — Part 1: Detection of the use of certain azo colorants accessible with and without extracting the fibres*

ISO 14362-3, *Textiles — Methods for determination of certain aromatic amines derived from azo colorants — Part 3: Detection of the use of certain azo colorants, which may release 4-aminoazobenzene*

ISO 17234-1, *Leather — Chemical tests for the determination of certain azo colourants in dyed leathers — Part 1: Determination of certain aromatic amines derived from azo colourants*

ISO 17234-2, *Leather — Chemical tests for the determination of certain azo colorants in dyed leathers — Part 2: Determination of 4-aminoazobenzene*

3 Terms and definitions

For the purposes of this document, the following terms and definitions apply.

ISO and IEC maintain terminology databases for use in standardization at the following addresses:

— ISO Online browsing platform: available at https://www.iso.org/obp

— IEC Electropedia: available at https://www.electropedia.org/

3.1
active restraint system
system where a carer performs an action to ensure that a child is secured in the restraint system

© ISO 2024 – All rights reserved

Documents
Document Sharing Hub
Full document details: BS ISO 9221:2024

3.2
passive restraint system
system where a carer does not perform an action to ensure that a child is secured in the restraint system

3.3
crotch restraint
device passing between the legs of a child and preventing the child from slipping forwards out of the high chair

3.4
waist restraint
rigid or flexible device(s), which, when fastened, goes from one side of the high chair to the other, passing in front of a child's waist or surrounding a child's waist

3.5
shoulder restraint
device passing over the shoulders and connecting either to a *crotch restraint* (3.3) or to a *waist restraint* (3.4)

3.6
locking device
component that maintains part(s) of a product in the position of use

EXAMPLE Latch, a hook, an over centre lock.

3.7
operating device
part of the *locking mechanism(s)* (3.9) or *parking device(s)* (3.8) designed to be activated by a carer by one or several action(s)

3.8
parking device
device intended to prevent rolling of castors/wheels

3.9
locking mechanism
assembly consisting of one or more *locking device(s)* (3.6) and one or more *operating device(s)* (3.7)

3.10
junction line
intersection of a seat and a backrest

3.11
paint or similar surface-coating
fluid, semi-fluid or other material, with or without colouring matter, which changes to a solid film when a thin layer is applied to a metal, wood, leather, cloth, plastic or another surface

4 General

4.1 Test conditions

The high chair shall be tested as delivered. If the high chair is a knock-down type, it shall be assembled according to the instructions supplied with it. If the instructions allow for different adjustments or configurations of components (e.g. inclination of the backrest, height of the seat, position of the tray, position of castors/wheels), the most onerous combination shall be used for each test, unless otherwise specified in the test method.

Knock-down fittings shall be tightened before testing. Further re-tightening shall not take place.

© ISO 2024 – All rights reserved

Documents
Document Sharing Hub
Full document details: BS ISO 9221:2024

4.2 Application of forces

The forces in the static load tests shall be applied sufficiently slowly to ensure that negligible dynamic force is applied.

The tests are described in terms of the application of forces; however, masses can be used. The relationship 10 *N* = 1 kg shall be used for this purpose.

4.3 Tolerances

Unless otherwise stated, the following tolerances apply:

— forces: ±5 % of the nominal force;

— masses: ±0,5 % of the nominal mass;

— dimensions: ±1,0 mm of the nominal dimension;

— angles: ±2° of the nominal angle;

— positioning of loading pads: ±5 mm.

NOTE For the purposes of uncertainty in measurements, test results are not considered to be adversely affected when the above tolerances are met.

4.4 Test sequence

The tests in Clause 8 shall be carried out on the same high chair and in the order of the clauses of this document.

4.5 Determination of the junction line

The junction line is shown in Figure 1.

Where the backrest and the seat do not meet, the junction line is the projection of the backrest onto the seat (see Figure 1).

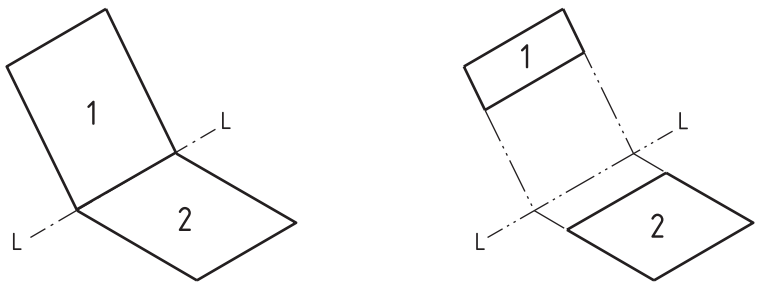

Key

1 backrest

2 seat

LL junction line

Figure 1 — Junction line

© ISO 2024 – All rights reserved

Documents
Document Sharing Hub
Full document details: BS ISO 9221:2024

When the seat unit is in the form of a hammock, a theoretical junction line, “LL”, shall be determined as shown in Figure 2. The junction line may vary when the backrest is adjusted in different positions.

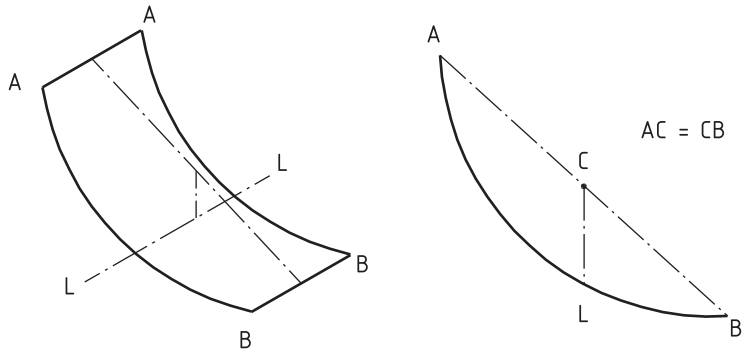

Key

AA top edge of the backrest

BB front edge of the seat

LL junction line

CL vertical projection of C on the hammock

C mid-point between A and B

Figure 2 — Junction line for seat units in the form of a hammock

© ISO 2024 – All rights reserved

Documents
Document Sharing Hub
Full document details: BS ISO 9221:2024

5 Test equipment

Unless otherwise specified, test forces may be applied by any suitable device as results are dependent only upon correctly applied forces and not upon the apparatus.

5.1 Test mass A: A rigid cylinder 200 mm in diameter and 300 mm in height, having a mass of 15 kg with its centre of gravity 150 mm above its base. The edges shall have a radius of 5 mm. Two anchorage points shall be provided. These shall be positioned 150 mm from the base and at an angle of 180° to each other around the circumference (see Figure 3).

Dimensions in millimetres

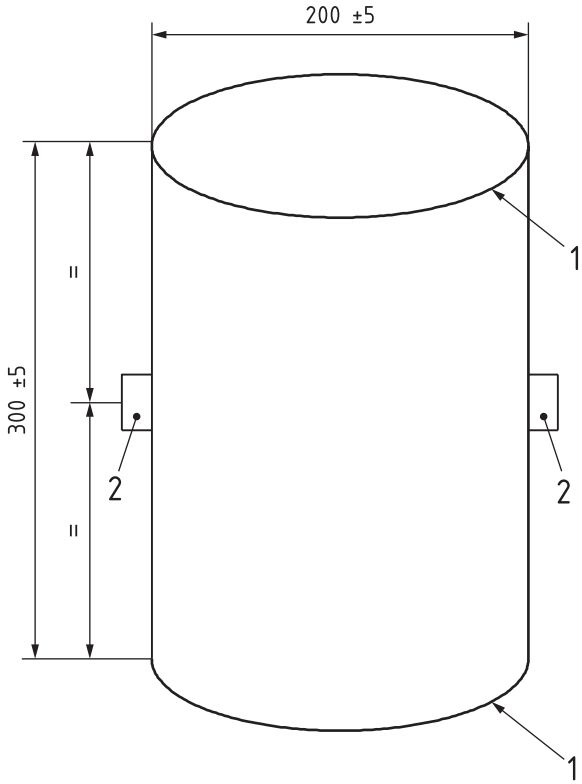

Key

1 edge radius: (5 ± 1) mm

2 anchorage points

Figure 3 — Test mass A

© ISO 2024 – All rights reserved

Documents
Document Sharing Hub
Full document details: BS ISO 9221:2024

5.2 Impact hammer: A striker in the form of a cylindrical object having a total mass of 6,5 kg supported from a pivot by a steel tube of 38 mm in diameter and with a wall thickness of 2 mm (see Figure 4). The distance between the pivot and the centre of gravity of the striker shall be 1 000 mm. The pendulum arm shall be pivoted by a low friction bearing.

Dimensions in millimetres

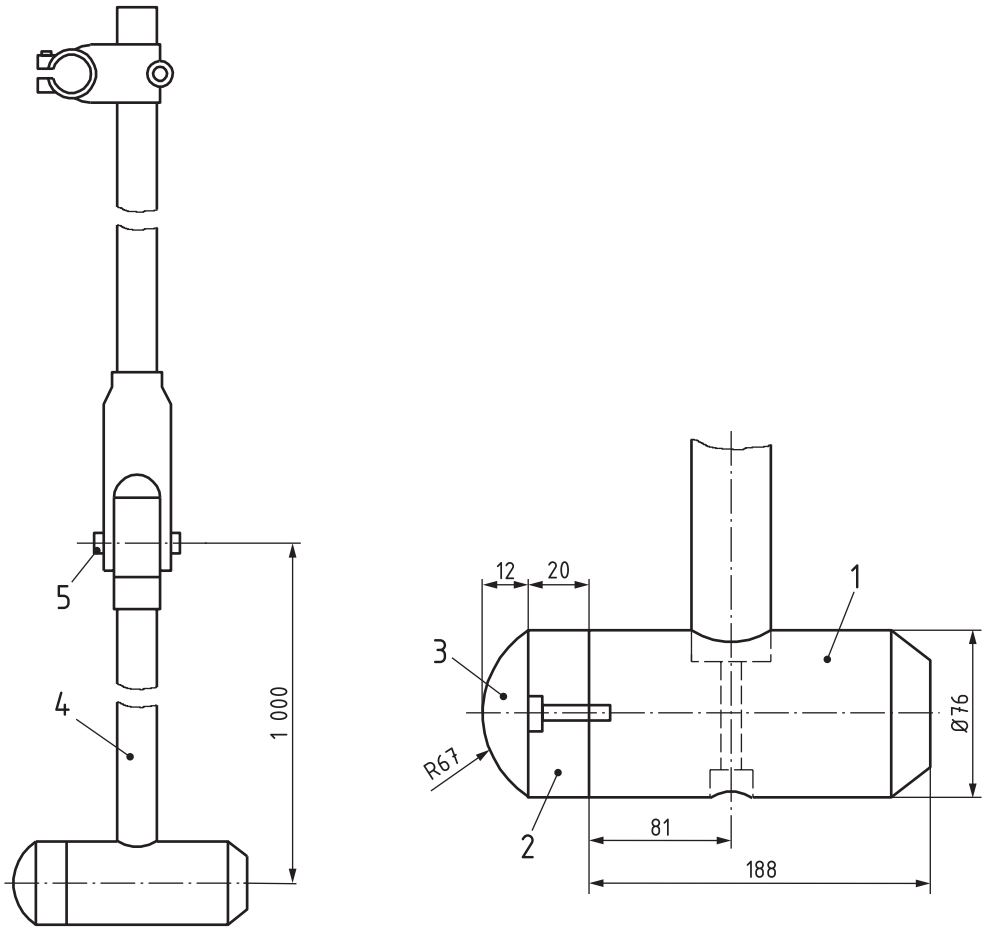

Key

1 pendulum head, steel mass 6,4 kg

2 hardwood

3 rubber (50 ± 10) Shore A (see ISO 48-4)

4 pendulum arm, length 950 mm; high tensile steel tube Ø 38 mm × 2 mm; mass (2 ± 0,2) kg

5 pivot point

Mass of assembly (key numbers 1, 2 and 3): (6,5 ± 0,07) kg.

Figure 4 — Impact hammer

5.3 Large loading pad: A rigid cylindrical object 100 mm in diameter having a smooth hard surface and edges rounded with radius of 12 mm.

5.4 Small loading pad: A rigid cylindrical object 30 mm in diameter having a smooth hard surface and edges rounded with radius of (0,8 ± 0,3) mm.

5.5 Stops, which prevent the high chair from sliding but not tilting, no higher than 12 mm. Except in cases where the design of the item necessitates the use of higher stops, in which case the lowest stops that will prevent the item from sliding shall be used.

© ISO 2024 – All rights reserved

Documents
Document Sharing Hub
Full document details: BS ISO 9221:2024

5.6 Floor surface: A horizontal, flat and rigid plane with a smooth surface.

For the tests according to 8.8.6.4, a 2 mm thick rubber mat, with hardness (75 ± 10) Shore A in accordance with ISO 48-4, shall be used on a concrete floor.

5.7 Beams for stability testing and for measuring the length of the lateral protection.

5.7.1 Beam, not less than 900 mm long, with a square section of 25 mm × 25 mm and with a mass of (0,5 ± 0,01) kg.

5.7.2 Beam for measuring the height for lateral protection test, 86 mm wide and with a mass of (0,5 ± 0,01) kg.

5.8 Probes for finger entrapment.

5.8.1 Finger probe, made of plastic or another hard, smooth material, with diameters $7^{0}_{-0,1}$ mm and $12^{+0,1}_{0}$ mm, with a hemispherical end (see Figure 5) and which can be mounted on a force-measuring device.

Dimensions in millimetres

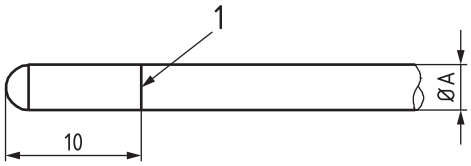

Key

1 line around the probe showing the depth of penetration

A diameter

Figure 5 — Test probes with hemispherical ends

© ISO 2024 – All rights reserved

Documents
Document Sharing Hub
Full document details: BS ISO 9221:2024

5.8.2 Shape assessment probe, made of rigid and smooth material, with the dimensions shown in Figure 6.

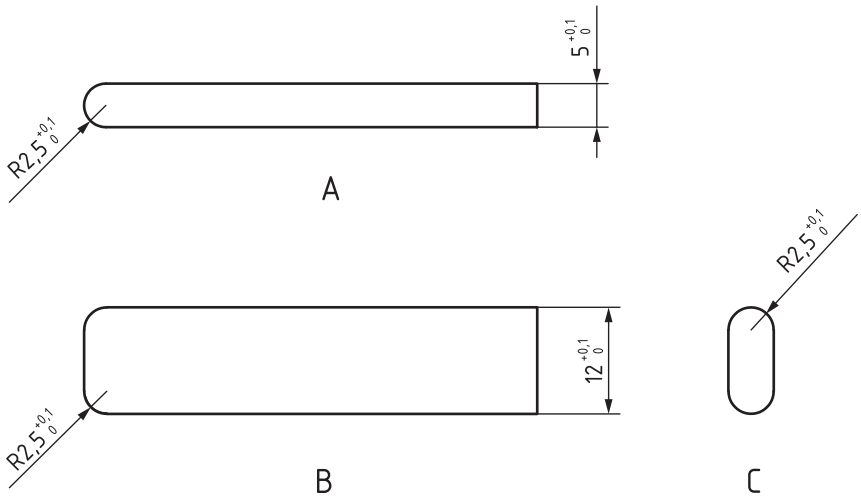

Key

A side view

B top view

C front view

Figure 6 — Shape assessment probe

5.9 Test mass B: A cylinder with a mass of 5 kg and a diameter of 100 mm.

5.10 Small parts cylinder for the assessment of small components, having dimensions in accordance with Figure 7.

Dimension in millimetres

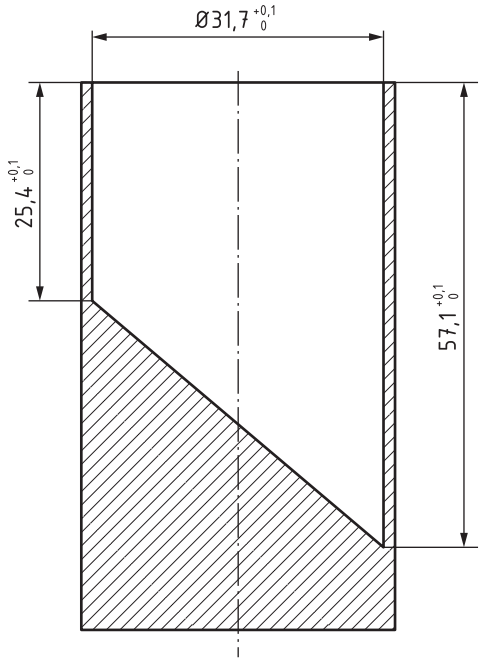

Figure 7 — Small parts cylinder

© ISO 2024 – All rights reserved

Documents
Document Sharing Hub
Full document details: BS ISO 9221:2024

5.11 Small torso probe made from plastic or another hard, smooth material, with dimensions as shown in Figure 8.

Dimensions in millimetres

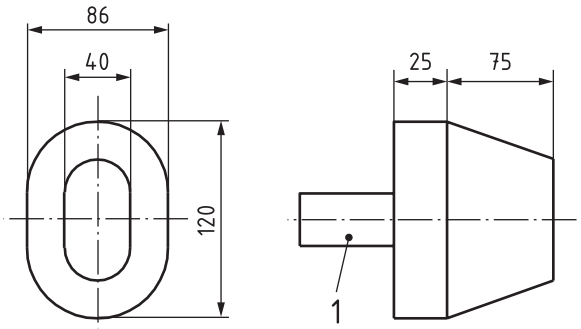

Key

1 handle

Figure 8 — Small torso probe

5.12 Test mass C: An object made of steel with a total mass of (9 ± 0,1) kg and with dimensions as specified in Figure 9.

All edges shall be rounded or chamfered.

© ISO 2024 – All rights reserved

Documents
Document Sharing Hub
Full document details: BS ISO 9221:2024