BS ISO 9374-4:2024

BSI Standards Publication

Cranes — Information to be provided

Part 4: Jib cranes

Documents
Document Sharing Hub

Full document details: BS ISO 9374-4:2024

National foreword

This British Standard is the UK implementation of ISO 9374-4:2024.

The UK participation in its preparation was entrusted to Technical Committee MHE/3/3, Bridge, gantry and slewing jib cranes.

A list of organizations represented on this committee can be obtained on request to its committee manager.

Contractual and legal considerations

This publication has been prepared in good faith, however no representation, warranty, assurance or undertaking (express or implied) is or will be made, and no responsibility or liability is or will be accepted by BSI in relation to the adequacy, accuracy, completeness or reasonableness of this publication. All and any such responsibility and liability is expressly disclaimed to the full extent permitted by the law.

This publication is provided as is, and is to be used at the recipient's own risk.

The recipient is advised to consider seeking professional guidance with respect to its use of this publication.

This publication is not intended to constitute a contract. Users are responsible for its correct application.

© The British Standards Institution 2024
Published by BSI Standards Limited 2024

ISBN 978 0 539 21731 5

ICS 53.020.20

Compliance with a British Standard cannot confer immunity from legal obligations.

This British Standard was published under the authority of the Standards Policy and Strategy Committee on 31 August 2024.

Amendments/corrigenda issued since publication

Date	Text affected

Documents
Document Sharing Hub

Full document details: BS ISO 9374-4:2024

International Standard

ISO 9374-4

Second edition
2024-08

Cranes — Information to be provided —

Part 4: Jib cranes

Appareils de levage à charge suspendue — Informations à fournir —

Partie 4: Grues à flèche

Reference number
ISO 9374-4:2024(en)

© ISO 2024

Documents
Document Sharing Hub

Full document details: BS ISO 9374-4:2024

COPYRIGHT PROTECTED DOCUMENT

© ISO 2024

All rights reserved. Unless otherwise specified, or required in the context of its implementation, no part of this publication may be reproduced or utilized otherwise in any form or by any means, electronic or mechanical, including photocopying, or posting on the internet or an intranet, without prior written permission. Permission can be requested from either ISO at the address below or ISO's member body in the country of the requester.

ISO copyright office
CP 401 • Ch. de Blandonnet 8
CH-1214 Vernier, Geneva
Phone: +41 22 749 01 11
Email: copyright@iso.org
Website: www.iso.org

Published in Switzerland

Documents
Document Sharing Hub
Full document details: BS ISO 9374-4:2024

Contents

Page

Foreword ..... **iv**

1 Scope **1**

2 Normative references **1**

3 Terms and definitions **1**

4 Information to be provided by the purchaser with the enquiry or order **1**

5 Information to be provided by the manufacturer **1**

5.1 Technical information 1

5.2 Dimensions 2

Annex A (informative) **Sample format and information to be provided by the purchaser with the enquiry or order** **5**

Bibliography **17**

© ISO 2024 – All rights reserved

Documents
Document Sharing Hub

Full document details: BS ISO 9374-4:2024

Foreword

ISO (the International Organization for Standardization) is a worldwide federation of national standards bodies (ISO member bodies). The work of preparing International Standards is normally carried out through ISO technical committees. Each member body interested in a subject for which a technical committee has been established has the right to be represented on that committee. International organizations, governmental and non-governmental, in liaison with ISO, also take part in the work. ISO collaborates closely with the International Electrotechnical Commission (IEC) on all matters of electrotechnical standardization.

The procedures used to develop this document and those intended for its further maintenance are described in the ISO/IEC Directives, Part 1. In particular, the different approval criteria needed for the different types of ISO document should be noted. This document was drafted in accordance with the editorial rules of the ISO/IEC Directives, Part 2 (see www.iso.org/directives).

ISO draws attention to the possibility that the implementation of this document may involve the use of (a) patent(s). ISO takes no position concerning the evidence, validity or applicability of any claimed patent rights in respect thereof. As of the date of publication of this document, ISO had not received notice of (a) patent(s) which may be required to implement this document. However, implementers are cautioned that this may not represent the latest information, which may be obtained from the patent database available at www.iso.org/patents. ISO shall not be held responsible for identifying any or all such patent rights.

Any trade name used in this document is information given for the convenience of users and does not constitute an endorsement.

For an explanation of the voluntary nature of standards, the meaning of ISO specific terms and expressions related to conformity assessment, as well as information about ISO's adherence to the World Trade Organization (WTO) principles in the Technical Barriers to Trade (TBT), see www.iso.org/iso/foreword.html.

This document was prepared by Technical Committee ISO/TC 96, *Cranes*, Subcommittee SC 8, *Jib cranes*.

This second edition cancels and replaces the first edition (ISO 9374-4:1989), which has been technically revised.

The main changes are as follows:

— Clause 3 has been added;

— Figures 1 to 3 have been redrawn;

— Annex A has been rearranged.

A list of all parts in the ISO 9374 series can be found on the ISO website.

Any feedback or questions on this document should be directed to the user's national standards body. A complete listing of these bodies can be found at www.iso.org/members.html.

© ISO 2024 – All rights reserved

Documents
Document Sharing Hub
Full document details: BS ISO 9374-4:2024

Cranes — Information to be provided —

Part 4: Jib cranes

1 Scope

This document specifies information to be provided by:

a) a purchaser in enquiring about or ordering a jib crane;

b) a manufacturer in tendering for or supplying a jib crane.

2 Normative references

The following documents are referred to in the text in such a way that some or all of their content constitutes requirements of this document. For dated references, only the edition cited applies. For undated references, the latest edition of the referenced document (including any amendments) applies.

ISO 4306-1, *Cranes — Vocabulary — Part 1: General*

ISO 4306-4, *Cranes — Vocabulary — Part 4: Jib cranes*

ISO 9374-1, *Cranes — Information to be provided — Part 1: General*

ISO 8686-4, *Cranes — Design principles for loads and load combinations — Part 4: Jib cranes*

3 Terms and definitions

For the purposes of this document, the terms and definitions given in ISO 4306-1 and ISO 4306-4 apply.

ISO and IEC maintain terminology databases for use in standardization at the following addresses:

— ISO Online browsing platform: available at https://www.iso.org/

— IEC Electropedia: available at https://www.electropedia.org/

4 Information to be provided by the purchaser with the enquiry or order

The purchaser should provide the information given in Annex A to enable the crane manufacturer to offer or to supply the most suitable jib crane and equipment to satisfy the duty requirements and service conditions.

5 Information to be provided by the manufacturer

5.1 Technical information

The information provided by the manufacturer shall include:

a) the information provided by the manufacturer in accordance with ISO 9374-1;

b) erection information, when requested.

© ISO 2024 – All rights reserved

Documents
Document Sharing Hub
Full document details: BS ISO 9374-4:2024

The manufacturer shall supply all loads applied by the crane in accordance with ISO 8686-4.

5.2 Dimensions

The manufacturer shall provide the necessary dimensions to install and use the crane. Figures 1 to 3 show examples of drawings with minimum dimensions.

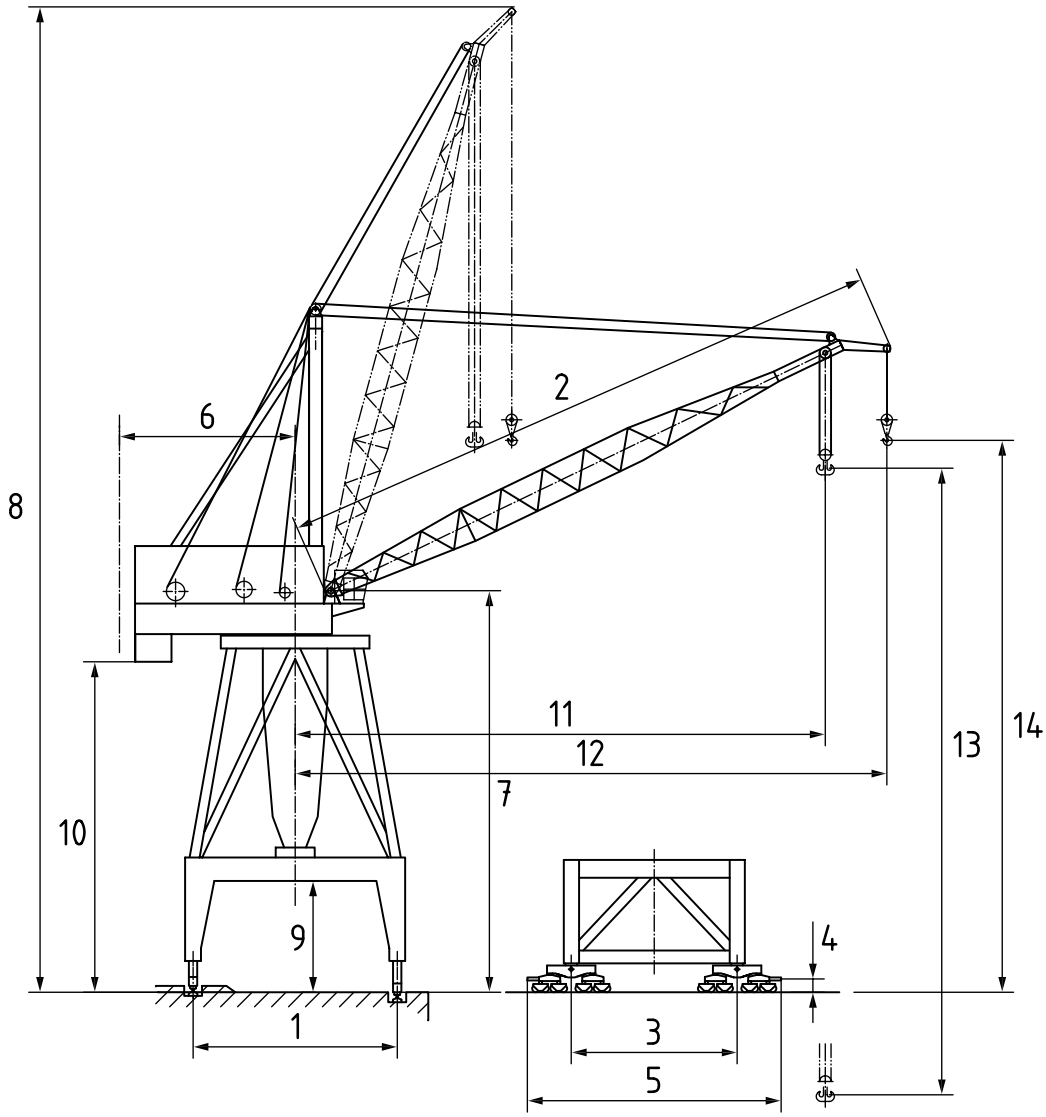

Key

1 span
2 boom length
3 crane wheel base
4 buffer height
5 buffer to buffer (buffer uncompressed)
6 tailswing radius
7 boom hinge elevation above rail
8 clearance height of boom
9 clearance under portal
10 clearance under rotating platform
11 working radius range for main hook
12 working radius range for auxiliary hook
13 hook height range for main hook
14 hook height range for auxiliary hook

Figure 1 — Examples of dimensions for portal or semi-portal slewing crane with single boom

© ISO 2024 – All rights reserved

Documents
Document Sharing Hub
Full document details: BS ISO 9374-4:2024