BS ISO 9613-2:2024

BSI Standards Publication

Acoustics — Attenuation of sound during propagation outdoors

Part 2: Engineering method for the prediction of sound pressure levels outdoors

Documents
Document Sharing Hub

Full document details: BS ISO 9613-2:2024

National foreword

This British Standard is the UK implementation of ISO 9613-2:2024.

The UK participation in its preparation was entrusted to Technical Committee EH/1/3, Residential and industrial noise.

A list of organizations represented on this committee can be obtained on request to its committee manager.

Contractual and legal considerations

This publication has been prepared in good faith, however no representation, warranty, assurance or undertaking (express or implied) is or will be made, and no responsibility or liability is or will be accepted by BSI in relation to the adequacy, accuracy, completeness or reasonableness of this publication. All and any such responsibility and liability is expressly disclaimed to the full extent permitted by the law.

This publication is provided as is, and is to be used at the recipient's own risk.

The recipient is advised to consider seeking professional guidance with respect to its use of this publication.

This publication is not intended to constitute a contract. Users are responsible for its correct application.

© The British Standards Institution 2024
Published by BSI Standards Limited 2024

ISBN 978 0 539 20903 7

ICS 17.140.01

Compliance with a British Standard cannot confer immunity from legal obligations.

This British Standard was published under the authority of the Standards Policy and Strategy Committee on 31 January 2024.

Amendments/corrigenda issued since publication

Date	Text affected

Documents
Document Sharing Hub

Full document details: BS ISO 9613-2:2024

International Standard

ISO 9613-2

Second edition
2024-01

Acoustics — Attenuation of sound during propagation outdoors —

Part 2: Engineering method for the prediction of sound pressure levels outdoors

Acoustique — Atténuation du son lors de sa propagation à l'air libre —

Partie 2: Méthode d'ingénierie pour la prédiction des niveaux de pression acoustique en extérieur

Reference number
ISO 9613-2:2024(en)

© ISO 2024

Documents
Document Sharing Hub

Full document details: BS ISO 9613-2:2024

COPYRIGHT PROTECTED DOCUMENT

© ISO 2024

All rights reserved. Unless otherwise specified, or required in the context of its implementation, no part of this publication may be reproduced or utilized otherwise in any form or by any means, electronic or mechanical, including photocopying, or posting on the internet or an intranet, without prior written permission. Permission can be requested from either ISO at the address below or ISO's member body in the country of the requester.

ISO copyright office
CP 401 • Ch. de Blandonnet 8
CH-1214 Vernier, Geneva
Phone: +41 22 749 01 11
Email: copyright@iso.org
Website: www.iso.org

Published in Switzerland

© ISO 2024 – All rights reserved

Documents
Document Sharing Hub

Full document details: BS ISO 9613-2:2024

Contents

Page

Foreword ... **iv**
Introduction ... **vi**
1 Scope ... **1**
2 Normative references ... **2**
3 Terms, definitions, symbols and units ... **2**
3.1 Terms and definitions ... 2
3.2 Symbols and units ... 3
4 Source description ... **4**
5 Meteorological conditions ... **6**
6 Basic formulae ... **7**
7 Calculation of the attenuation terms ... **8**
7.1 Geometric divergence, A_{div} ... 8
7.2 Atmospheric absorption, A_{atm} ... 9
7.3 Ground attenuation, A_{gr} ... 9
7.3.1 General method of calculation ... 9
7.3.2 Simplified method of calculation for A-weighted sound pressure levels ... 12
7.4 Screening, A_{bar} ... 13
7.4.1 General method of calculation ... 13
7.4.2 Alternative method to calculate the path length difference z with one edge or with more parallel edges ... 17
7.4.3 Lateral diffraction around vertical edges ... 19
7.4.4 Combining vertical and lateral diffractions and limitations ... 20
7.5 Reflections ... 20
7.5.1 General ... 20
7.5.2 Single reflection at a flat surface – conditions and calculation ... 20
7.5.3 Multi-reflection up to higher orders ... 21
7.5.4 Reflections at cylindrical surfaces ... 22
8 Meteorological correction, C_{met} ... **23**
9 Accuracy and limitations of the method ... **25**
Annex A (informative) **Additional types of attenuation, A_{misc}** ... **27**
Annex B (informative) **Directivity correction, D_c, for chimney stacks** ... **34**
Annex C (informative) **Meteorological correction due to the dependency of C_0 from the angular wind distribution** ... **38**
Annex D (informative) **Calculation of sound pressure levels caused by wind turbines** ... **42**
Bibliography ... **45**

© ISO 2024 – All rights reserved

Documents
Document Sharing Hub
Full document details: BS ISO 9613-2:2024

Foreword

ISO (the International Organization for Standardization) is a worldwide federation of national standards bodies (ISO member bodies). The work of preparing International Standards is normally carried out through ISO technical committees. Each member body interested in a subject for which a technical committee has been established has the right to be represented on that committee. International organizations, governmental and non-governmental, in liaison with ISO, also take part in the work. ISO collaborates closely with the International Electrotechnical Commission (IEC) on all matters of electrotechnical standardization.

The procedures used to develop this document and those intended for its further maintenance are described in the ISO/IEC Directives, Part 1. In particular, the different approval criteria needed for the different types of ISO document should be noted. This document was drafted in accordance with the editorial rules of the ISO/IEC Directives, Part 2 (see www.iso.org/directives).

ISO draws attention to the possibility that the implementation of this document may involve the use of (a) patent(s). ISO takes no position concerning the evidence, validity or applicability of any claimed patent rights in respect thereof. As of the date of publication of this document, ISO had not received notice of (a) patent(s) which may be required to implement this document. However, implementers are cautioned that this may not represent the latest information, which may be obtained from the patent database available at www.iso.org/patents. ISO shall not be held responsible for identifying any or all such patent rights.

Any trade name used in this document is information given for the convenience of users and does not constitute an endorsement.

For an explanation of the voluntary nature of standards, the meaning of ISO specific terms and expressions related to conformity assessment, as well as information about ISO's adherence to the World Trade Organization (WTO) principles in the Technical Barriers to Trade (TBT), see www.iso.org/iso/foreword.html.

This document was prepared by Technical Committee ISO/TC 43, *Acoustics*, Subcommittee SC 1, *Noise*.

This second edition cancels and replaces the first edition (ISO 9613-2:1996), which has been technically revised.

The main changes are as follows:

— subdivision of extended sources improved (more detailed to decrease uncertainty with software implementations);

— improved classification of the source-directivity;

— improved and more detail specified in the determination of the ground factor G (projection to horizontal plane);

— integration of a correction for A_{gr} to account for the decreasing ground effect for small values of distance/height – harmonizing the General method 7.3.1 and the Simplified method 7.3.2;

— modified definition of the mean height h_m for the application of the Simplified method 7.3.2;

— integration of the strategy to calculate screening as it was developed with ISO/TR 17534-3;

— modified specification of the barrier attenuation D_z and the correction for meteorological effects K_{met} to eliminate well known shortcomings with low barriers and large source-to-receiver distances;

— inclusion of clear specifications on how to combine vertical and lateral diffraction (from ISO/TR 17534-3);

— improved specification of the minimal extension (width or height) of a reflecting surface;

— multi-reflections up to higher orders (in accordance with ISO/TR 17534-3);

— reflections at vertical cylindrical surfaces;

© ISO 2024 – All rights reserved

Documents
Document Sharing Hub
Full document details: BS ISO 9613-2:2024

— additional to the simple method for the attenuation of foliage without any parameter dependencies of the old version ISO 9613-2:1996, A.2.2, a new and more detailed method including the influence of forestal parameters (see A.2.3);

— the directivity correction D_c for chimney stacks (see Annex B);

— proposal for a meteorological correction derived from the local wind-climatology (see Annex C);

— calculation of sound pressure levels caused by wind turbines (see Annex D).

A list of all parts in the ISO 9613 series can be found on the ISO website.

Any feedback or questions on this document should be directed to the user's national standards body. A complete listing of these bodies can be found at www.iso.org/members.html.

© ISO 2024 – All rights reserved

Documents
Document Sharing Hub

Full document details: BS ISO 9613-2:2024

Introduction

The ISO 1996 series[1][2][3] of standards specifies methods for the description of noise outdoors in community environments. Other standards specify methods for determining the sound power levels emitted by various noise sources, such as machinery and specified equipment (ISO 3740 series[4]), or industrial plants (ISO 8297[5]). This document is intended to bridge the gap between these two types of standards, to enable noise levels in the community to be predicted from sources of known sound emission. The method described in this document is general in the sense that it may be applied to a wide variety of noise sources and covers most of the major mechanisms of attenuation. There are, however, constraints on its use, which arise principally from the description of environmental noise in the ISO 1996 series.

This version includes the modifications developed for reasons of quality assurance if the method is implemented in software as described in ISO 17534-1[6] and ISO/TR 17534-3[7] and some improvements to make the applied strategy fit for broad software-based application.

© ISO 2024 – All rights reserved

Documents
Document Sharing Hub
Full document details: BS ISO 9613-2:2024

Acoustics — Attenuation of sound during propagation outdoors —

Part 2: Engineering method for the prediction of sound pressure levels outdoors

1 Scope

This document specifies an engineering method for calculating the attenuation of sound during propagation outdoors in order to predict the levels of environmental noise at a distance from a variety of sources. The method predicts the equivalent continuous A-weighted sound pressure level (as described in ISO 1996-series) under meteorological conditions favourable to propagation from sources of known sound emission.

These conditions are for downwind propagation or, equivalently, propagation under a well-developed moderate ground-based temperature inversion, such as commonly occurs in clear, calm nights. Inversion conditions over extended water surfaces are not covered and may result in higher sound pressure levels than predicted from this document (see e.g. References [11] and [12]).

The method also predicts a long-term average A-weighted sound pressure level as specified in ISO 1996-1 and ISO 1996-2. The long-term average A-weighted sound pressure level encompasses levels for a wide variety of meteorological conditions.

Guidance has been provided to derive a meteorological correction based on the angular wind distribution relevant for the reference or long-term time interval as specified in ISO 1996-1:2016, 3.2.1 and 3.2.2. Examples for reference time intervals are day, night, or the hour of the night with the largest value of the sound pressure level. Long-term time intervals over which the sound of a series of reference time intervals is averaged or assessed representing a significant fraction of a year (e.g. 3 months, 6 months or 1 year).

The method specified in this document consists specifically of octave band algorithms (with nominal mid-band frequencies from 63 Hz to 8 kHz) for calculating the attenuation of sound which originates from a point sound source, or an assembly of point sources. The source (or sources) may be moving or stationary. Specific terms are provided in the algorithms for the following physical effects:

— geometrical divergence;

— atmospheric absorption;

— ground effect;

— reflection from surfaces;

— screening by obstacles.

Additional information concerning propagation through foliage, industrial sites and housing is given in Annex A. The directivity of chimney-stacks to support the sound predictions for industrial sites has been included with Annex B. An example how the far-distance meteorological correction C_0 can be determined from the local wind-climatology is given in Annex C. Experiences of the last decades how to predict the sound pressure levels caused by wind turbines is summarized in Annex D.

The method is applicable in practice to a great variety of noise sources and environments. It is applicable, directly, or indirectly, to most situations concerning road or rail traffic, industrial noise sources, construction

© ISO 2024 – All rights reserved

Documents Document Sharing Hub
Full document details: BS ISO 9613-2:2024

activities, and many other ground-based noise sources. It does not apply to sound from aircraft in flight, or to blast waves from mining, military, or similar operations.

To apply the method of this document, several parameters need to be known with respect to the geometry of the source and of the environment, the ground surface characteristics, and the source strength in terms of octave band sound power levels for directions relevant to the propagation.

If only A-weighted sound power levels of the sources are known, the attenuation terms for 500 Hz may be used to estimate the resulting attenuation.

The accuracy of the method and the limitations to its use in practice are described in Clause 9.

2 Normative references

The following documents are referred to in the text in such a way that some or all of their content constitutes requirements of this document. For dated references, only the edition cited applies. For undated references, the latest edition of the referenced document (including any amendments) applies.

ISO 9613-1:1993, *Acoustics — Attenuation of sound during propagation outdoors — Part 1: Calculation of the absorption of sound by the atmosphere*

3 Terms, definitions, symbols and units

3.1 Terms and definitions

For the purposes of this document, the following terms and definitions apply.

ISO and IEC maintain terminology databases for use in standardization at the following addresses:

— ISO Online browsing platform: available at https://www.iso.org/obp

— IEC Electropedia: available at https://www.electropedia.org/

3.1.1
A-weighted equivalent continuous sound pressure level
L_{AT}
sound pressure level defined by Formula (1):

$$L_{AT} = 10 \lg \left\{ \left[\left(\frac{1}{T} \right) \int_0^T p_A^2(t) \, dt \right] / p_0^2 \right\} \text{dB} \tag{1}$$

where

$p_A(t)$ is the instantaneous A-weighted sound pressure, expressed in pascals;

p_0 is the reference sound pressure (= 20 × 10^{-6} Pa);

T is a specified time interval, expressed in seconds

Note 1 to entry: The A-frequency weighting is that specified for sound level meters in IEC 61672-1[10].

Note 2 to entry: The time interval T should be long enough to average the effects of varying meteorological parameters. Two different situations are considered in this document, namely short-term downwind and long-term overall averages.

© ISO 2024 – All rights reserved

Documents
Document Sharing Hub
Full document details: BS ISO 9613-2:2024

3.1.2
equivalent continuous downwind octave band sound pressure level
L_{fT} (DW)
sound pressure level is given as follows:

$$L_{fT}\,(\mathrm{DW}) = 10\lg\left\{\left[\left(\frac{1}{T}\right)\int_0^T p_f^2\,(t)\,\mathrm{d}t\right] / p_0^2\right\}\mathrm{dB} \tag{2}$$

where $p_f(t)$ is the instantaneous octave band sound pressure downwind, in pascals, and the subscript f represents a nominal mid-band frequency of an octave band filter

Note 1 to entry: The electrical characteristics of the octave band filters should comply at least with the class 2 requirements of IEC 61260-1[8].

3.1.3
insertion loss (of a barrier)
difference between the sound pressure levels in decibels at a receiver in a specified position under two conditions:

a) with the barrier removed; and

b) with the barrier present (inserted);

and no other significant changes that affect the propagation of sound

Note 1 to entry: The insertion loss is expressed in decibels.

3.2 Symbols and units

Table 1 provides a summary of symbols and units.

Table 1 — Symbols and units

Symbol	Definition	Unit
a	component distance parallel to the barrier edge between source and receiver	m
A	octave band attenuation	dB
A_{atm}	attenuation due to atmospheric absorption	dB
A_{bar}	attenuation due to a barrier, including possible correction	dB
A_{div}	attenuation due to geometrical divergence	dB
A_{curv}	attenuation due to reflection at a cylindrical surface	dB
A_{gr}	attenuation due to the ground effect	dB
A_{m}	middle region	—
A_{misc}	attenuation due to miscellaneous other effects	dB
C_{met}	meteorological correction	dB
C_0	factor, which depends on local meteorological statistics for wind speed and direction, and temperature gradients	dB
d_{p}	distance from point source to receiver projected onto the ground plane (see Figure 3)	m
$d_{\mathrm{S,O}}$	distance between source and point of reflection on the reflecting obstacle (see Figure 13)	m
$d_{\mathrm{O,R}}$	distance between point of reflection on the reflecting obstacle and receiver (see Figure 13)	m
D_{c}	directivity correction	dB
D_{z}	barrier attenuation	dB
D_{wd}	apparent large-distance directivity	dB
e	distance between the first and last diffraction edge	m
G	ground factor	—

© ISO 2024 – All rights reserved

Documents
Document Sharing Hub
Full document details: BS ISO 9613-2:2024

Table 1 *(continued)*

Symbol	Definition	Unit
h_S	height of point source above ground	m
h_R	height of receiver above ground	m
h_m	mean height of the propagation path above the ground	m
k	raster factor	—
K_{geo}	correction factor for geometry	—
L_p	sound pressure level	dB
L_{AT}(DW)	equivalent continuous A-weighted downwind sound pressure level	dB
L_{AT}(LT)	long-term average A-weighted sound pressure level	dB
L_{fT}(DW)	equivalent continuous downwind octave band sound pressure level at a receiver location	dB
L_W	sound power level	dB
α_{atm}	atmospheric attenuation coefficient	dB/km
α	absorption coefficient	—
β	angle of incidence	rad
β_b	angle of incidence projected to the horizontal plane	rad
β_h	angle of incidence projected to a vertical plane rectangular to the reflecting surface	rad
λ	wavelength of sound	m

4 Source description

Formulae to be used are for the attenuation of sound from point sources.

Extended noise sources, therefore, such as road and rail traffic or an industrial site (which may include several installations or plants, together with traffic moving on the site) shall be broken down into small sections that can be replaced by a central point source as starting point for the calculation of sound propagation, see Figure 1. This subdivision shall be chosen in such a way that the propagation conditions from each point of a section to the receiver can be considered representative. If no acoustically opaque objects block the direct path between any point of a section and the receiver, the propagation conditions shall be considered representative if no extent of the section is larger than the distance of its centre from the receiver multiplied by the raster factor k. A well proven value for the factor k is 0,5.

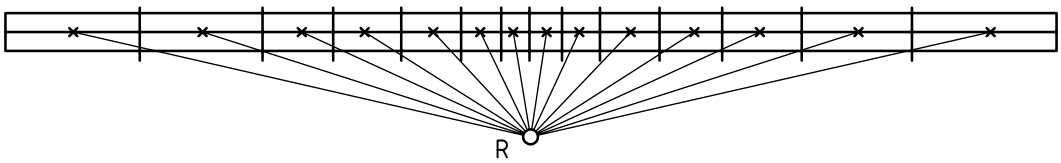

Key

R receiver

Figure 1 — Principle of subdivision for a line source

If buildings, barriers or other screening objects are located between the extended source and the receiver, the subdivision of the source is made in such a way that all points of a section are either screened or not screened. The subsections can be separated by lines connecting the receiver with the edges of all facades or with the two edges of each object forming the largest possible angle between them in 2D top view.

© ISO 2024 – All rights reserved

Documents
Document Sharing Hub
Full document details: BS ISO 9613-2:2024

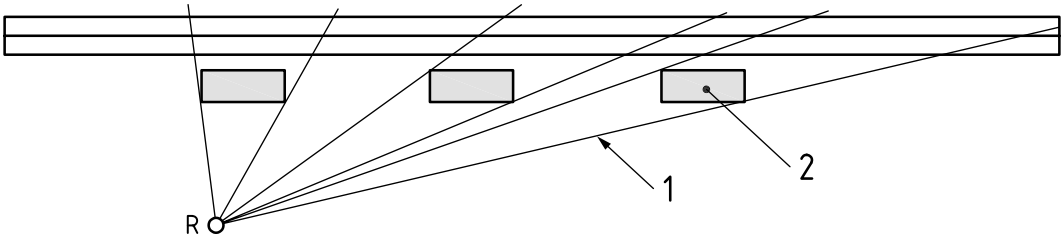

a) Line source

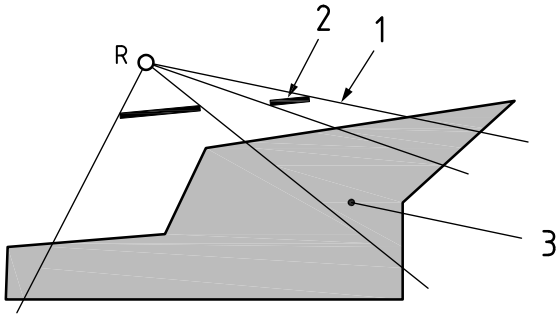

b) Area source

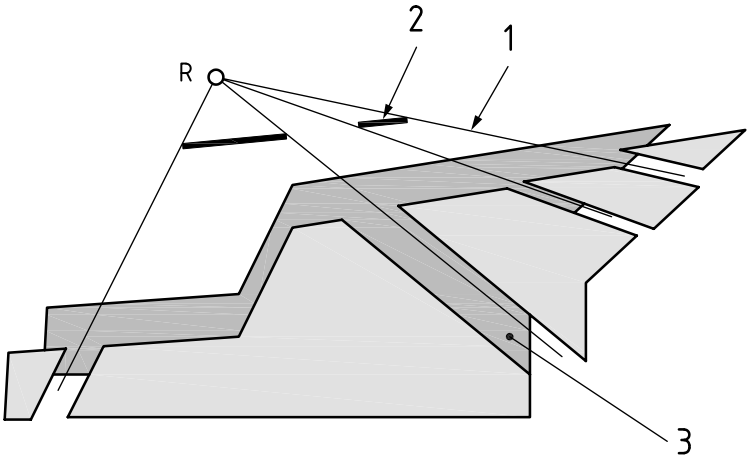

c) Area source (dark grey), partitioned in 5 sub-parts (light grey)

Key

1 projection lines

2 barriers

3 area source

Figure 2 — Projection method for line source and area source

The principle is shown with Figure 2 a) for a line source and Figures 2 b) and 2 c) for an area source. A further subdivision is made if a sloping edge of a screening object is only partially blocking the direct view. This subdivision caused by screening objects is called "projection method".

For line sources that are geometrically defined by successive polygon points the subdivision is performed in three steps:

a) each polygon point is the edge point of one or two polygon elements;

b) if the direct propagation path is blocked by a screening object, a further subdivision is carried out by applying the projection method;

© ISO 2024 – All rights reserved

Documents
Document Sharing Hub
Full document details: BS ISO 9613-2:2024

c) finally, these resulting parts are further subdivided according to the distance criterion applying the raster factor *k*.

Area sources are subdivided applying a similar strategy.

The area source is separated in convex shaped parts. These parts are subdivided further depending on the receiver position and all screening objects (walls, buildings, and other objects). This is carried out by cutting the subsections obtained in the first step by straight lines between receiver and edge-points of all screening objects (producing smaller subsections of second order). Then it is checked if the individual sources of each subsection meet the distance criterion. If not, they are subdivided further till the distance criterion is fulfilled.

Similar as with extended sources, a group of point sources may be described by an equivalent point sound source situated in the middle of the group, in particular if

a) the sources have approximately the same strength and height above the local ground, and

b) the same propagation conditions exist from the sources to the receiver, and

c) no extent of the group of point sources is larger than the distance of its centre from the receiver multiplied by the raster factor *k*. A well proven value for the factor *k* is 0,5.

If the distance *d* is smaller (as expressed in c)) or if the propagation conditions for the component point sources are different (e.g. due to screening), the total sound source shall be divided into its component point sources.

NOTE In addition to the real sources described above, image sources will be introduced to describe the reflection of sound from walls and ceilings (but not by the ground) as described in 7.5. Images of extended sources are constructed taking into account the extension of all relevant reflectors between original source and receiver.

5 Meteorological conditions

Downwind propagation conditions for the method specified in this document are namely:

— wind direction within an angle of ±45° of the direction connecting the centre of the dominant sound source and the centre of the specified receiver region, with the wind blowing from source to receiver, and

— wind speed between approximately 1 m/s and 5 m/s, measured at a height of 3 m to 11 m above the ground.

When applying this standard to wind turbines, higher wind speeds may be considered (see Annex D).

The formulae for calculating the equivalent continuous A-weighted downwind sound pressure level L_{AT}(DW) in this document, including the formulae for attenuation given in Clause 7, are the average for meteorological conditions within these limits. The term average here means the average over a short time interval.

These formulae also hold, equivalently, for average propagation under a well-developed moderate ground-based temperature inversion, such as commonly occurs on clear, calm nights.

The long-term averaged A-weighted sound pressure level L_{AT}(LT) can be determined by applying the meteorological correction described in Clause 8. It depends generally on the long-term variation of the angular distribution of the horizontal wind speed and the effective vertical sound speed gradient. Owing to this influence of the sound speed gradient the vertical gradients of the wind speed and the air temperature may be important and should generally be considered.

© ISO 2024 – All rights reserved

Documents
Document Sharing Hub
Full document details: BS ISO 9613-2:2024

6 Basic formulae

The equivalent continuous downwind octave band sound pressure level at a receiver location, L_{fT}(DW), shall be calculated for each point source, and its image sources, and for the eight octave bands with nominal mid-band frequencies from 63 Hz to 8 kHz from Formula (3):

$$L_{fT}\,(\mathrm{DW}) = L_{\mathrm{W}} + D_{\mathrm{c}} - A \tag{3}$$

where

L_{W} is the octave band sound power level produced by the point sound source relative to a reference sound power of one picowatt (1 pW), expressed in decibels;

D_{c} is the directivity correction, in decibels, that describes the extent by which the equivalent continuous sound pressure level from the point sound source deviates in a specified direction from the level of an omnidirectional point sound source producing the sound power level L_W, expressed in decibels;

A is the octave band attenuation that occurs during propagation from the point sound source to the receiver, expressed in decibels.

Sound power levels in Formula (3) can be determined from measurements, for example as described in the ISO 3740 series (for machinery) or in ISO 8297 (for industrial plants).

NOTE 1 The letter symbol A (in italic type) signifies attenuation in this document except in subscripts, where it designates the A-frequency weighting (in roman type).

The directivity correction D_{c} in connection with the sound power level L_{W} describes

— the direction-dependent emission of the real source (case 1), or

— an apparent direction-dependent emission, resulting from reflecting structures near the source that reduce the solid angle available for radiation (case 2).

In case 1 D_{c} is a necessary part of the source emission data for all directions relevant for the calculation at receiver positions.

In case 2 the directivity D_{c} with an omnidirectional point source due to nearby reflecting surfaces is given by Formula (4):

$$D_{\mathrm{c}} = 10\lg\left(\frac{4\pi}{\Omega}\right)\mathrm{dB} \tag{4}$$

where Ω is the solid angle remaining for radiation.

Table 2 gives values for the resulting directivity of an omnidirectional point source near reflecting surfaces.

Table 2 — Resulting directivity D_{c} of an omnidirectional point source near reflecting surfaces

Reflecting surface		Solid angle Ω	D_{c}
Configuration	**Number**	**rad**	**dB**
Surface	1	4π/2	3
Edge	2	4π/4	6
Corner	3	4π/8	9

NOTE 2 Formula (4) and the values of D_{c} in Table 2 are based on the premise of the superposition of sound energies. In case of distances of source-to-reflector smaller $\lambda/4$ coherent superposition will occur, the factor 10 in Formula (4) and the values of D_{c} in Table 2 will increase up to twice the values given. However, an increase over the values shown is only possible if the source can produce and radiate the additional sound power.

© ISO 2024 – All rights reserved

Documents
Document Sharing Hub
Full document details: BS ISO 9613-2:2024

NOTE 3 In software-based calculations of the increase of sound pressure levels from an omnidirectional point source caused by reflecting surfaces nearby a directivity D_c with Formula (4) or with values from Table 2 replaces the calculation of reflections at these surfaces with image sources (see 7.5).

The attenuation term A in Formula (3) is given by Formula (5):

$$A = A_{\text{div}} + A_{\text{atm}} + A_{\text{gr}} + A_{\text{bar}} + A_{\text{misc}} \tag{5}$$

where

A_{div} is the attenuation due to geometrical divergence, expressed in decibels (see 7.1);

A_{atm} is the attenuation due to atmospheric absorption, expressed in decibels (see 7.2);

A_{gr} is the attenuation due to the ground effect, expressed in decibels (see 7.3);

A_{bar} is the attenuation due to a barrier, expressed in decibels (see 7.4);

A_{misc} is the attenuation due to miscellaneous other effects, expressed in decibels (see 7.5.4 and Annex A).

General methods for calculating the first four terms in Formula (5) are specified in this document. Information on four contributions to the last term A_{misc} is given in Annex A (the attenuation due to the curvature of reflecting surfaces in 7.5.4, the attenuation due to propagation through foliage, industrial sites and through regions built up of houses).

The equivalent continuous A-weighted downwind sound pressure level shall be obtained by summing the contributing time-mean-square sound pressures calculated according to Formulae (3) and (5) for each point sound source, for each of their image sources, and for each octave band, as specified by Formula (6):

$$L_{AT}(\text{DW}) = 10\lg\left\{\sum_{i=1}^{n}\left[\sum_{j=1}^{8} 10^{0,1\left[L_{fT}(i,j)+A_f(j)\right]}\right]\right\}\text{dB} \tag{6}$$

where

n is the number of contributions i (sources and paths);

j is an index indicating the eight standard octave mid-band frequencies from 63 Hz to 8 kHz;

A_f denotes the standard A-weighting (see IEC 61672-1).

The long-term average A-weighted sound pressure level L_{AT}(LT) shall be calculated according to Formula (7).

$$L_{AT}(\text{LT}) = L_{AT}(\text{DW}) - C_{\text{met}} \tag{7}$$

where C_{met} is the meteorological correction described in Clause 8.

The calculation and significance of the various terms in Formulae (1) to (7) are explained in Clauses 7 and 8.

7 Calculation of the attenuation terms

7.1 Geometric divergence, A_{div}

The geometrical divergence accounts for spherical spreading in the free field from a point sound source, making the attenuation, in decibels, equal to Formula (8):

$$A_{\text{div}} = [20\lg(d/d_0) + 11]\,\text{dB} \tag{8}$$

© ISO 2024 – All rights reserved

Documents
Document Sharing Hub
Full document details: BS ISO 9613-2:2024

where

d is the distance from the source to receiver, expressed in metres;

d_0 is the reference distance (= 1 m).

NOTE 1 The constant in Formula (8) relates the sound power level to the sound pressure level at a reference distance d_0 which is 1 m from an omnidirectional point sound source.

7.2 Atmospheric absorption, A_{atm}

The attenuation due to atmospheric absorption A_{atm}, expressed in decibels, during propagation through a distance d, in metres, is given by Formula (9):

$$A_{atm} = \alpha_{atm} d / 1\,000 \tag{9}$$

where α_{atm} is the atmospheric attenuation coefficient for each octave band at the mid-band frequency, expressed in decibels per kilometre.

It shall be calculated with ISO 9613-1:1993, Formulae (2) to (6) in connection with ISO 9613-1:1993, B.1 to B.3. With ISO 9613-1:1993, Formula (6) the exact octave band related centre-frequencies are applied (different to all other frequency dependent calculations based on the nominal and rounded octave band centre-frequencies).

If no specific requirements are defined, default values should be defined related to representative conditions for the investigated area.

NOTE For example, a temperature of 10 °C and a relative humidity of 70 % are typical default parameters applied in some countries in Mid-Europe. The atmospheric attenuation coefficient depends strongly on the frequency of the sound, the ambient temperature and relative humidity of the air, but only weakly on the ambient pressure.

For calculation of environmental noise levels, the atmospheric attenuation coefficient should be based on average values determined by the range of ambient weather, which is relevant to the locality.

7.3 Ground attenuation, A_{gr}

7.3.1 General method of calculation

Ground attenuation, A_{gr}, is mainly the result of sound reflected by the ground surface interfering with the sound propagating directly from source to receiver.

The downward-curving propagation path (downwind) ensures that this attenuation is determined primarily by the ground surfaces near the source and near the receiver. This method of calculating the ground effect is based on a scenario with ground, which is approximately flat, either horizontally or with a constant slope. Three distinct regions for ground attenuation are specified (see Figure 3):

a) the source region, stretching over a distance from the source towards the receiver of 30 h_S, with a maximum distance of d_p (h_S is the source height, and d_p the distance from source to receiver, as projected on the ground plane);

b) the receiver region, stretching over a distance from the receiver back towards the source of 30 h_R, with a maximum distance of d_p (h_R is the receiver height);

c) a middle region, stretching over the distance between the source and receiver regions. If $d_p < (30\ h_S + 30\ h_R)$, the source and receiver regions will overlap, and there is no middle region.

According to this scheme, the ground attenuation does not increase with the size of the middle region but is mostly dependent on the properties of source and receiver regions.

The acoustical properties of each ground region are taken into account through a ground factor G.

© ISO 2024 – All rights reserved

Documents
Document Sharing Hub
Full document details: BS ISO 9613-2:2024