BS ISO/IEC 10192-3:2017

BSI Standards Publication

Information technology — Home electronic system (HES) interfaces

Part 3: Modular communications interface for energy management

Documents
Document Sharing Hub

Full document details: BS ISO/IEC 10192-3:2017

National foreword

This British Standard is the UK implementation of ISO/IEC 10192-3:2017.

The UK participation in its preparation was entrusted to Technical Committee IST/6/-/12, Home Electronic Systems.

A list of organizations represented on this committee can be obtained on request to its secretary.

This publication does not purport to include all the necessary provisions of a contract. Users are responsible for its correct application.

© The British Standards Institution 2018
Published by BSI Standards Limited 2018

ISBN 978 0 580 90963 4

ICS 35.240.99; 35.200

Compliance with a British Standard cannot confer immunity from legal obligations.

This British Standard was published under the authority of the Standards Policy and Strategy Committee on 31 January 2018.

Amendments/corrigenda issued since publication

Date	Text affected

Documents
Document Sharing Hub

Full document details: BS ISO/IEC 10192-3:2017

ISO/IEC 10192-3

Edition 1.0 2017-11

INTERNATIONAL STANDARD

colour inside

Information technology – Home electronic system (HES) interfaces – Part 3: Modular communications interface for energy management

INTERNATIONAL
ELECTROTECHNICAL
COMMISSION

ICS 35.200

ISBN 978-2-8322-5099-0

Warning! Make sure that you obtained this publication from an authorized distributor.

Documents
Document Sharing Hub

Full document details: BS ISO/IEC 10192-3:2017

CONTENTS

FOREWORD 7
INTRODUCTION 8
1 Scope 10
2 Normative references 10
3 Terms, definitions and abbreviated terms 11
3.1 Terms and definitions 11
3.2 Abbreviated terms 11
4 Conformance 12
5 Physical/electrical Interface 12
5.1 Form factors 12
5.2 Removal and exchange of a UCM 12
5.3 Block diagram 12
6 Serial protocol 13
6.1 Protocol data unit 13
6.2 Message Type field 13
6.3 Payload length field 14
6.4 Checksum field 15
6.5 Bit and byte order 15
6.5.1 Bit order within a byte 15
6.5.2 Byte order for multi-byte messages 15
6.6 Message synchronization and timing 15
6.6.1 Message sequencing 15
6.6.2 Link layer timing 15
6.6.3 Randomized link layer retries 17
6.6.4 Application layer timing 17
6.7 SGD handling of conflicting messages 18
7 Simple Protocol 18
8 Link layer 19
8.1 Use of link layer messages 19
8.2 Link layer ACK/NAK 19
8.3 Message Type “supported query” 20
9 Data-link messages 21
9.1 Message format 21
9.2 Interface power limit negotiation 23
9.3 Bit rate negotiation 24
9.4 Power-up and state reset 25
9.5 Security 25
9.6 Setting slot numbering 25
10 Basic DR application (Message Type = 0x08, 0x01) 26
10.1 Basic DR application commands 26
10.1.1 Message format 26
10.1.2 Basic message fixed length 30
10.1.3 Event Duration field 30
10.1.4 Grouped messages 31
10.2 Usage and details of basic DR application messages 31
10.2.1 Request for power level (Opcode 0x06) 31

AVA Documents
Document Sharing Hub

10.2.2 Relative price commands (Opcode 0x07 and 0x08) ... 32
10.2.3 Time remaining in present price period (Opcode 0x09) ... 33
10.2.4 Operating state monitoring (Opcodes 0x12 and 0x13) ... 33
11 Intermediate DR application (Message Type = 0x08, 0x02) ... 35
11.1 Intermediate DR message set ... 35
11.2 Usage and details of Intermediate DR application messages ... 38
11.2.1 Info request ... 38
11.2.2 Get/Set UTC time ... 41
11.2.3 Get/Set energy price ... 42
11.2.4 Get/Set tier ... 44
11.2.5 Get/Set temperature offset ... 45
11.2.6 Get/Set set point ... 46
11.2.7 Autonomous cycling ... 47
11.2.8 Demand reduction – terminate cycling ... 49
11.3 Demand response event schedules ... 49
11.3.1 Function ... 49
11.3.2 Send scheduled events request ... 50
11.4 Energy consumption ... 50
11.4.1 Function ... 50
11.4.2 Commodity read ... 50
11.4.3 Get/Set CommodityType ... 53
12 Commissioning and network messages (Message Type = 0x08, 0x04) ... 55
13 Pass-Through Mode ... 55
13.1 Pass-Through method ... 55
13.1.1 General ... 55
13.1.2 Full Encapsulation in the Message Payload ... 56
13.1.3 Message Type Field ... 56
13.1.4 Message Type Support Query ... 56
13.1.5 Maximum Message Length Negotiation ... 56
13.1.6 Pass-Through mode protocols ... 56
13.2 Pass-Through mode protocols ... 56
13.2.1 USNAP 1.0 protocol Pass-Through ... 56
13.2.2 SEP1.0 or 1.1 Pass-Through ... 57
13.2.3 ClimateTalk Pass-Through ... 57
13.2.4 General Internet Protocol Pass-Through ... 57
13.2.5 ISO/IEC 14543-4-3 Pass-Through ... 58
13.2.6 ISO/IEC 14543-3-1 Pass-Through ... 58
13.2.7 ISO/IEC 14908-1 Pass-Through ... 59
13.2.8 SunSpec Pass-Through ... 59
14 Typical communication exchanges ... 59
15 General security principles ... 60
16 Load management event randomization ... 60
Annex A (normative) Low voltage DC form factor ... 62
A.1 General ... 62
A.2 Limitations ... 62
A.3 Power for UCM ... 62
A.4 Mechanical interface ... 62
A.4.1 DC form factor board layout ... 62

AVA Documents
Document Sharing Hub
Full document details: BS ISO/IEC 10192-3:2017

A.4.2 Module configuration ... 63
A.4.3 Form factor ... 66
A.4.4 Housing materials ... 66
A.4.5 Connector type ... 66
A.4.6 Pin assignments ... 67
A.5 Electrical interface ... 67
A.5.1 Electrical Interface Levels ... 67
A.5.2 Signal timing ... 67
A.5.3 Interface circuits ... 68
A.6 Data transfer protocol ... 68
A.6.1 Control signals ... 68
A.6.2 Clock and data rate ... 69
A.6.3 Multiple slots ... 69
A.7 Link layer data flow ... 69
A.8 Messages ... 69
A.8.1 Frame structure ... 69
A.8.2 Message synchronization (frame delimiting) ... 69
A.8.3 Message filling (inter-message byte filling) ... 69
A.8.4 Command/Response encoding ... 70
A.8.5 Checksum calculation ... 70
A.8.6 Master/Slave ... 70
A.8.7 Flow control ... 70
A.8.8 Error detection and recovery ... 70
A.9 Operation ... 71
A.9.1 Transaction sequence ... 71
A.9.2 SPI data transfer state machine ... 74
A.9.3 SGD transmitter operation ... 75
A.9.4 SGD device receiver operation ... 75
A.9.5 UCM operations ... 76
Annex B (informative) Description of DC form factor applications ... 77
B.1 General ... 77
B.2 Applications of ISO/IEC 24379 ... 77
B.3 Physical Form Factor Review ... 77
B.4 Observations with regard to UCM and ATA confusion ... 78
B.4.1 General ... 78
B.4.2 ATA into Smart Grid Device ... 78
B.4.3 Universal Communication Module into ATA device bay ... 78
B.5 Conclusion ... 78
Annex C (normative) AC form factor ... 79
C.1 General ... 79
C.2 Physical form ... 79
C.2.1 AC SGD and AC UCM connector ... 79
C.2.2 AC enclosure requirements ... 84
C.3 AC power ... 87
C.4 Obtaining message sync ... 89
Annex D (normative) Fletcher checksum ... 90
D.1 Checksum method ... 90
D.2 Calculating the checksum ... 90
D.3 Decoding the checksum ... 90

AVA Documents
Document Sharing Hub
Full document details: BS ISO/IEC 10192-3:2017

Annex E (informative) Example Visual Basic code 91
Annex F (informative) Guideline for computing average price 92
F.1 Average Price versus Time Varying Charges 92
F.2 Relative price command 92
F.3 Explanation for non-regulated utilities 93
F.4 Summary 93
Annex G (informative) Product safety considerations 95
Bibliography 96

Figure 1 – Illustrations of the modular communications interface (MCI) concept 9
Figure 2 – Modular communications interface (MCI) block diagram 13
Figure 3 – Link layer timing 16
Figure 4 – Application layer timing 17
Figure 5 – Non-linear event duration scaling 31
Figure 6 – Non-linear relative price scaling 33
Figure 7 – Illustration of energy storage capacity 53
Figure 8 – Internet Protocol Pass-Through (IPv6) 58
Figure 9 – Illustration of randomization of events by communications modules 61
Figure A.1 – DC form factor PCB dimensions 63
Figure A.2 – DC form factor housing dimensions – top view 64
Figure A.3 – DC form factor housing dimensions – side view 65
Figure A.4 – DC form factor housing dimensions – end view 66
Figure A.5 – Pin assignment 67
Figure A.6 – SPI Mode 0 bit timing 67
Figure A.7 – SPI transaction sequence: SGD-initiated message to the UCM 71
Figure A.8 – SPI transaction sequence: UCM-initiated message to the SGD 72
Figure A.9 – SPI data transfer state machine 74
Figure C.1 – Panel-mount AC connector form factor (device side shown) and pin-out 80
Figure C.2 – PCB-mount AC UCM connector (housing) 80
Figure C.3 – Cable AC UCM connector (housing) 81
Figure C.4 – Panel mount AC SGD connector form factor dimensions 82
Figure C.5 – PCB mount connector dimensions 83
Figure C.6 – Cable connector dimensions 83
Figure C.7 – Contact dimensions for cable connector and PCB mount connector 84
Figure C.8 – Reserved area and dimensions on SGD (receptacle) 85
Figure C.9 – Right side and top view of maximum UCM dimensions 86
Figure C.10 – Left side and bottom view of maximum UCM dimensions 87
Figure C.11 – Typical RS-485 polarity and byte transfer 88
Figure C.12 – RS-485 connections 88

Table 1 – Protocol data unit format 13
Table 2 – Message type assignments 14
Table 3 – Message timing requirements 16
Table 4 – Basic/Intermediate DR application layer timing parameters 18

AVA Documents
Document Sharing Hub

Table 5 – Mandatory message summary 19
Table 6 – ACK/NAK Packet 19
Table 7 – Link layer NAK codes 20
Table 8 – Message type “supported query” 20
Table 9 – Data-link message format 21
Table 10 – Data-link command set 22
Table 11 – Interface power level indicator codes 23
Table 12 – Bit rate indicator 25
Table 13 – Basic application data format 26
Table 14 – Basic DR application command set 27
Table 15 – Operating state codes 34
Table 16 – Operating-state codes for usage conditions 35
Table 17 – Intermediate DR application command set (command byte description) 36
Table 18 – Intermediate DR application command set 37
Table 19 – Response code values 38
Table 20 – Commissioning and network messages 55
Table 21 – Pass-Through message 56
Table 22 – USNAP1.0 over serial 56
Table 23 – SEP1.0 or 1.1 over serial 57
Table 24 – ClimateTalk over serial 57
Table 25 – ISO/IEC 14543-4-3 over serial 58
Table 26 – ISO/IEC 14543-3-1 over serial 59
Table 27 – ISO/IEC 14908-1 over serial 59
Table 28 – SunSpec over serial 59
Table A.1 – Low voltage interface signal definitions 68
Table A.2 – SPI physical timing requirements 73

Documents
Document Sharing Hub

Full document details: BS ISO/IEC 10192-3:2017

INFORMATION TECHNOLOGY – HOME ELECTRONIC SYSTEM (HES) INTERFACES –

Part 3: Modular communications interface for energy management

FOREWORD

1) ISO (the International Organization for Standardization) and IEC (the International Electrotechnical Commission) form the specialized system for worldwide standardization. National bodies that are members of ISO or IEC participate in the development of International Standards through technical committees established by the respective organization to deal with particular fields of technical activity. ISO and IEC technical committees collaborate in fields of mutual interest. Other international organizations, governmental and non-governmental, in liaison with ISO and IEC, also take part in the work. In the field of information technology, ISO and IEC have established a joint technical committee, ISO/IEC JTC 1.

2) The formal decisions or agreements of IEC and ISO on technical matters express, as nearly as possible, an international consensus of opinion on the relevant subjects since each technical committee has representation from all interested IEC National Committees and ISO member bodies.

3) IEC, ISO and ISO/IEC publications have the form of recommendations for international use and are accepted by IEC National Committees and ISO member bodies in that sense. While all reasonable efforts are made to ensure that the technical content of IEC, ISO and ISO/IEC publications is accurate, IEC or ISO cannot be held responsible for the way in which they are used or for any misinterpretation by any end user.

4) In order to promote international uniformity, IEC National Committees and ISO member bodies undertake to apply IEC, ISO and ISO/IEC publications transparently to the maximum extent possible in their national and regional publications. Any divergence between any ISO, IEC or ISO/IEC publication and the corresponding national or regional publication should be clearly indicated in the latter.

5) ISO and IEC do not provide any attestation of conformity. Independent certification bodies provide conformity assessment services and, in some areas, access to IEC marks of conformity. ISO or IEC are not responsible for any services carried out by independent certification bodies.

6) All users should ensure that they have the latest edition of this publication.

7) No liability shall attach to IEC or ISO or its directors, employees, servants or agents including individual experts and members of their technical committees and IEC National Committees or ISO member bodies for any personal injury, property damage or other damage of any nature whatsoever, whether direct or indirect, or for costs (including legal fees) and expenses arising out of the publication of, use of, or reliance upon, this ISO/IEC publication or any other IEC, ISO or ISO/IEC publications.

8) Attention is drawn to the normative references cited in this publication. Use of the referenced publications is indispensable for the correct application of this publication.

9) Attention is drawn to the possibility that some of the elements of this ISO/IEC publication may be the subject of patent rights. ISO and IEC shall not be held responsible for identifying any or all such patent rights.

International Standard ISO/IEC 10192-3 was prepared by subcommittee 25: Interconnection of information technology equipment, of ISO/IEC joint technical committee 1: Information technology.

This International Standard has been approved by vote of the member bodies, and the voting results may be obtained from the address given on the second title page.

This publication has been drafted in accordance with the ISO/IEC Directives, Part 2.

A list of all parts in the ISO/IEC 10192 series, published under the general title *Information technology – Home electronic system (HES) interfaces*, can be found on the IEC and ISO websites.

IMPORTANT – The 'colour inside' logo on the cover page of this publication indicates that it contains colours, which are considered to be useful for the correct understanding of its contents. Users should therefore print this document using a colour printer.

Documents
Document Sharing Hub

Full document details: BS ISO/IEC 10192-3:2017

INTRODUCTION

Utilities world-wide are investing heavily in smart grid infrastructures for energy that extend to homes and businesses with the goal of improving grid reliability and efficiency through increased consumer awareness and participation. This document provides a solution for grid connections within the home through a modular communications interface (MCI) enabling any product to connect to a variety of demand-response systems. Such systems may include Advanced Metering Infrastructure (AMI), Smart Energy Profile (SEP), IEC PAS 62746-10-1:2014 (OpenADR 2.0) and/or home or building networks such as protocols specified in the ISO/IEC 14543 series. The concept is simple: encourage manufacturers to build an MCI into their products that can accept a simple communications module. Consumers and programme managers are then free to select whatever communications solution works best for their particular environment.

The MCI is based on the ISO/IEC 8482 interface (commonly referenced as RS-485) and the Serial Peripheral Interface (SPI) supported by most silicon chips. The messages conveyed through the MCI to the end-device use either an externally specified command set (called the “Pass-Through mode”) or the demand response (DR) application command set specified in this document as the Simple Protocol. The DR command set is intended for devices that cannot process one of the “pass-through” command sets. This document specifies options for the Pass-Through mode based on protocols commonly used in grid applications such as Internet Protocol (IP), IEC PAS 62746-10-1:2014 (OpenADR 2.0), SEP, and ISO/IEC 14543 series protocols. Network security is supported at the application layer in the Pass-Through mode in addition to network or application layer security.

The MCI specified in this document may use either of the following connectors:

- an AC powered form, which uses the ISO/IEC 8482 interface over a physical connector defined in this document;
- a DC powered form, which uses the Serial Peripheral Interface over a connector defined in ISO/IEC 24739-3. The use of this connector is discussed in Annex A and Annex B.

The MCI applies to devices that may include an energy management hub, an energy management controller, an energy management agent, a residential gateway, an energy services interface, a sensor, a thermostat, an appliance or other consumer products. A physical connection from a communication module to residential smart grid devices and options for a communications protocol including application messages are specified. The specific residential devices to use an MCI are not specified. For energy management the choice depends on the system and the network topology. If a hub topology is chosen, the MCI may be located on the hub. The connection between the hub and end-devices such as appliances is not specified.

Communication messages specified in this document for the DR command set support direct load control, time-of-use (TOU), critical-peak-pricing (CPP), real-time pricing (RTP), peak time rebates, various types of block rates, and a range of ancillary services. The functionality of the removable MCI modules can be tailored by utilities or other load managing entities to provide support for the unique needs in a given region or service territory without impacting the end-devices. Figure 1 illustrates the general concept of the MCI.

Documents
Document Sharing Hub

Full document details: BS ISO/IEC 10192-3:2017

a) MCI on a controlled device **b) MCI on an energy management console**

Figure 1 – Illustrations of the modular communications interface (MCI) concept

This document enables a new generation of “smart grid ready” products that limit risks and constraints of proprietary communication technologies and evolving standards. This approach simplifies home area network (HAN) device and network interoperability, fosters programme and product innovation and opens DR programmes to a broader range of consumer products, while facilitating customer choice and a competitive market landscape.

Documents
Document Sharing Hub
Full document details: BS ISO/IEC 10192-3:2017

INFORMATION TECHNOLOGY – HOME ELECTRONIC SYSTEM (HES) INTERFACES –

Part 3: Modular communications interface for energy management

1 Scope

This part of IEC 10192 specifies a UCM (Universal Communications Module) that transfers energy management data via a home network between an end-device and an energy management agent (specified in ISO/IEC 15067-3) or an energy service provider. This document specifies the mechanical, electrical and logical characteristics of the interfaces of UCM to an end-device (hereafter referred to as an SGD – Smart Grid Device) and a choice of interfaces to a home communications network.

This document specifies the physical and data-link characteristics of the interface between the UCM and the SGD, along with certain higher-layer and application layer elements as needed to assure interoperability over a broad range of device capabilities. It specifies a mechanism through which network, transport and application layer messages specified in other documents listed in this document may be passed through the interface. For those end-devices that cannot process one of the “pass-through” command sets, a Simple Protocol is specified according to the OSI (Open System Interconnect) reference model (ISO/IEC 7498-1) including application layer messaging for energy management.

The UCM specified in this document is intended to be installable by the purchaser, home occupant or professional installer. The connectors are integrated in a way that allows for easy, plug-in installation. However, the manufacturer may choose to pre-install a module during production or have installation handled by a manufacturer representative or professional installer.

The scope of this document does not include safety related construction, performance, marking or instruction requirements. UCM products should additionally comply with applicable product safety standard(s). Examples of such standards are presented in Annex G.

NOTE Some regulatory authorities require that appliances intended for participation in energy management, such as thermostats, be user installable.

2 Normative references

The following documents are referred to in the text in such a way that some or all of their content constitutes requirements of this document. For dated references, only the edition cited applies. For undated references, the latest edition of the referenced document (including any amendments) applies.

ISO/IEC 8482, *Information technology – Telecommunications and information exchange between systems – Twisted pair multipoint interconnections*

ISO/IEC 14543-3-1, *Information technology – Home electronic system (HES) architecture – Part 3-1: Communication layers – Application layer for network based control of HES Class 1*

ISO/IEC 14543-4-3, *Information technology – Home electronic system (HES) architecture – Part 4-3: Application layer interface to lower communications layers for network enhanced control devices of HES Class 1*

ISO/IEC 14908-1, *Information technology – Control network protocol – Part 1: Protocol stack*

AVA Documents
Document Sharing Hub

ISO/IEC 24739-3, *Information technology – AT attachment with packet interface-7 – Part 3: Serial transport protocols and physical interconnect (ATA/ATAPI-7 V3)*

ISO 4217, *Codes for the representation of currencies*

IEC PAS 62746-10-1:2014, *Systems interface between customer energy management system and the power management system – Part 10-1: Open Automated Demand Response (OpenADR 2.0b Profile Specification)*

3 Terms, definitions and abbreviated terms

3.1 Terms and definitions

3.1.1
average price
equivalent constant price for electricity as determined by the energy service provider

3.1.2
hot-swappable
connected and removed under load

3.1.3
Pass-Through mode
use of one of the following application layer protocols: Advanced Metering Infrastructure (AMI), Smart Energy Profile (SEP), IEC PAS 62746-10-1:2014 (OpenADR 2.0) and/or home or building networks specified in the ISO/IEC 14543 series

3.1.4
relative price
ratio of the current price to the average price, where “Average_Price” is calculated as specified in Annex F

3.1.5
smart grid device
end-device that is being informed of energy grid conditions

3.1.6
universal communications module
communications device that provides communication connectivity to a smart grid device

3.2 Abbreviated terms

AMI	Advanced Metering Infrastructure
AP	Average Price
ATA	Advanced Technology Attachment
CPP	Critical Peak Price
DR	Demand Response
HVAC	Heating, Ventilation and Air Conditioning
IP	Internet Protocol
LS	Least Significant
MS	Most Significant
OpenADR	Automated Demand Response specification from the OpenADR Alliance
PCB	Printed Circuit Board
PLC	Power Line Carrier

Documents
Document Sharing Hub
Full document details: BS ISO/IEC 10192-3:2017

PoE	Power over Ethernet
RBDS	Radio Broadcast Data System
RDS	Radio Data System
SEP	Smart Energy Profile
SGD	Smart Grid Device
SPI	Serial Peripheral Interface (data transfer standard originally specified by Motorola (Freescale))
TVC	Time Varying Charges
UCM	Universal Communications Module
UTC	Universal Coordinated Time
0x00 to 0xFF	Two digit (8 bit) hexadecimal numbers ranging from 0 to 255 decimal
b0, b1 .. b15	Bit values within a hexadecimal number. b0 is the least significant bit.

4 Conformance

In order to conform to this document a UCM shall transfer energy management data between an end-device and an energy management agent or an energy service provider via a home network, provide an interface to the device (as specified in Clause 5 with a DC interface as specified in Annex A or an AC interface as specified in Annex C) and provide an interface to a home network as specified in Clause 6.

The messaging format shall be one of the protocols referenced in Clause 13 or the Simple Protocol specified in Clauses 7, 8, 9, 10, 11 and 12.

5 Physical/electrical Interface

5.1 Form factors

Two physical form factors are specified. End-device manufacturers may choose either, and communications module providers who wish to cover all products may offer two module versions. For both form factors, the communications protocol across the socket interface is the same, as described herein. Also in both cases, the power for the UCM is provided by the SGD. One form factor provides a low voltage DC supply and an SPI serial data interface. This form factor is specified in Annex A. This option might be attractive in cases where the end-device has no AC power source or when smaller socket size is required.

The second form factor provides AC service voltage for a single phase (typically 120 V or 240 V depending on the country and the appliance) and an ISO/IEC 8482-based serial interface. This form factor is specified in Annex C. This option might be attractive in cases where the end-device does not provide a DC power supply, where compatibility with PLC communications modules is desired or where communications module access to line frequency is needed.

NOTE 1 ISO/IEC 8482 was originally developed as RS-485 and TIA-485.

5.2 Removal and exchange of a UCM

It is assumed that UCMs will be removed or exchanged without turning off the SGD. Therefore, the UCM shall be hot-swappable.

5.3 Block diagram

Figure 2 shows the block diagram of the MCI.

Documents
Document Sharing Hub

Full document details: BS ISO/IEC 10192-3:2017

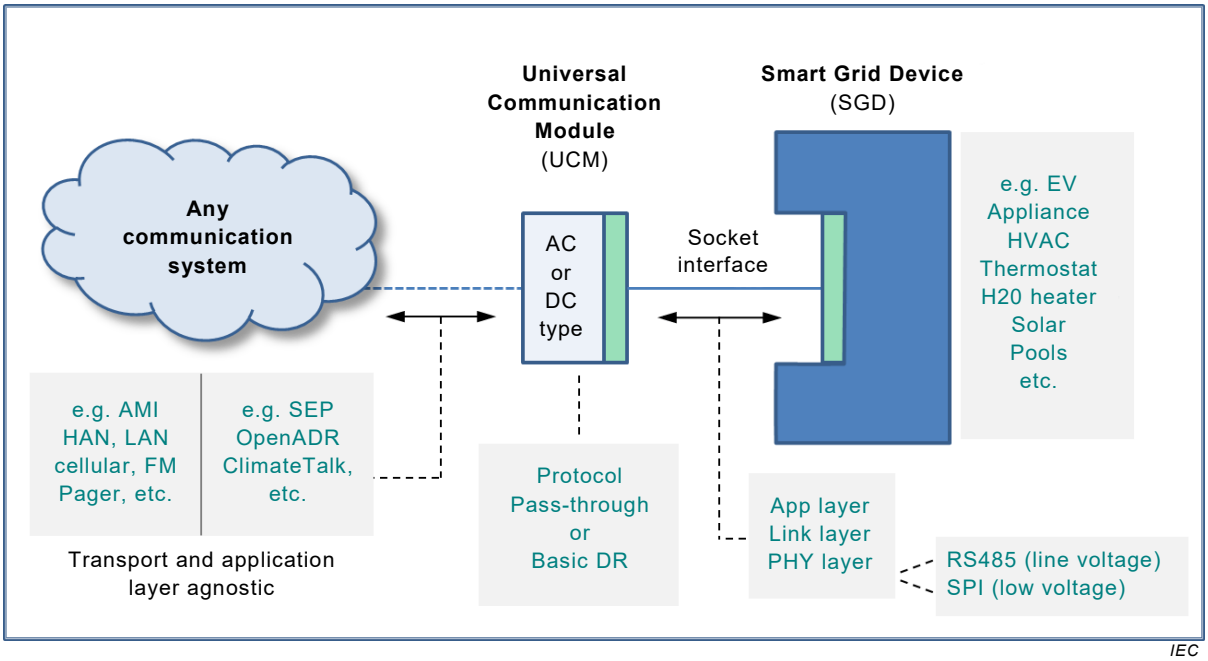

Figure 2 – Modular communications interface (MCI) block diagram

6 Serial protocol

6.1 Protocol data unit

This document defines an extensible serial protocol data unit that is manageable by the simplest of devices and also capable of being extended to accommodate more complex devices. The general message format is shown in Table 1.

Table 1 – Protocol data unit format

Message Type	Reserved shall be '0x0'	Payload length	Payload	Checksum
2 bytes	3 bits	13 bits	Variable	2 bytes

Conceptually the "payload" portion of the message can transport a range of protocols, with the "Message Type" field indicating which protocol and the checksum included ensuring link layer data integrity. There are 3 bits at the start of the third byte that are reserved for future work. These shall be held at 0 for compatibility with future revisions. This scheme provides a high level of flexibility and extensibility. A simple means is provided for SGDs and UCMs to discover which protocol each supports.

6.2 Message Type field

The "Message Type" bytes indicate the type of message, essentially indicating which communications protocol is represented in the payload. The "Message Type" values are specified in Table 2. Typical communication exchanges are presented in Clause 14.

Documents
Document Sharing Hub
Full document details: BS ISO/IEC 10192-3:2017

Table 2 – Message type assignments

Message Type MS byte	Message Type LS byte	Description
0x00 to 0x05	0x00 to 0xFF	Reserved for vendor proprietary use
0x06	0x00 to 0xFF	Reserved to avoid confusion with link layer ACK
0x07	0x00 to 0xFF	For Future Assignment
0x08	0x01	Basic DR Application (at least partially supported by all devices)
0x08	0x02	Intermediate DR Application
0x08	0x03	Data-Link Messages
0x08	0x04	Commissioning and Network Support Messages
0x08	0x05 to 0xFF	For Future Assignment
0x09	0x01	USNAP 1.0, Pass-Through
0x09	0x02	ClimateTalk, Pass-Through
0x09	0x03	Smart Energy Profile 1.0, Pass-Through
0x09	0x04	Smart Energy Profile 2.0 over IP, Pass-Through
0x09	0x05	OpenADR 1.0 over IP, Pass-Through
0x09	0x06	IEC PAS 62746-10-1, Pass-Through
0x09	0x07	Generic IP Pass-Through (IP packets self-identify version so both IPv4 and IPv6 are covered)
0x09	0x08	ISO/IEC 14543-4-3 Pass-Through
0x09	0x09	ISO/IEC 14543-3-1 Pass-Through
0x09	0x0A	ISO/IEC 14908-1 Pass-Through
0x09	0x0B	Sunspec Modbus Pass-Through
0x09	0x0C to 0xFF	For Future Assignment
0x0A to 0x14	0x00 to 0xFF	For Future Assignment
0x15	0x00 to 0xFF	Reserved to avoid confusion with link layer NAK
0x16 to 0xEF	0x00 to 0xFF	For Future Assignment
0xF0 to 0xFF	0x00 to 0xFF	Reserved for vendor proprietary use

The “Vendor Proprietary” message types allow for device makers to make use of the serial interface for any purpose they wish. This includes manufacturing processes, field diagnostics, etc. Once a message begins with an address in these vendor-proprietary ranges, the remainder of the message may be formatted and used as desired by the manufacturer. In cases where the device has multiple internal subsystems sharing the serial bus, further addressing might be handled using the second byte.

New Message Types are to be assigned by the respective interface standard or specification. Usually this would be done in co-ordination with the organization(s) responsible for the management of the domain-area or protocol that is to be passed through.

Clause 9 specifies the query used to determine if a device supports a specific message type. Support of the basic message type 0x08 0x01 is required and need not be queried.

6.3 Payload length field

The “Payload Length” is a 13-bit representation of the number of bytes in the Payload field. For the Basic DR messages, this is always a 2. Other message types may have variable payload lengths and may also include additional length bytes somewhere in the message payload as specified by the other protocols.

Documents
Document Sharing Hub

Full document details: BS ISO/IEC 10192-3:2017

A device, either UCM or SGD, shall not send a payload greater than 2 bytes unless it has first determined the Maximum Payload of the receiving device by sending a Maximum Payload Length Query (see Table 14) to the receiving device.

6.4 Checksum field

The checksum is calculated starting with the first Message Type byte through to the end of the payload. Checksum calculation and encoding is according to a Fletcher checksum as specified in Annex D.

6.5 Bit and byte order

6.5.1 Bit order within a byte

Bytes are transmitted most significant bit first for the DC form factor and least significant bit first for the AC form factor.

6.5.2 Byte order for multi-byte messages

For both the AC and DC form factor interfaces, multi-byte numbers, such as the Message Type and Length, are transmitted most significant byte first (Big Endian).

As an example, the 16-bit hexadecimal value 0x102F would be transmitted as follows.

Byte	Contents	Comments
1	0x10	First byte transmitted
2	0x2F	Last byte transmitted

6.6 Message synchronization and timing

6.6.1 Message sequencing

All communication on the MCI shall be half-duplex. This applies to both the low-voltage DC interface using SPI and the high voltage AC interface using ISO/IEC 8284. The nature of the two-wire ISO/IEC 8284 interface fundamentally allows only one side to transmit successfully at any time.

This document allows either the communications module or the end-device to initiate communication. As a result, bus contention is possible on the AC interface and shall be electrically tolerated by the devices on both sides without damage. Recognition of contention is to be achieved by the absence of an appropriate link layer response and recovery by the randomized data-link retry process specified in 6.6.3.

6.6.2 Link layer timing

Required link layer timing is illustrated in Figure 3 and specified in Table 3.

Documents
Document Sharing Hub

Full document details: BS ISO/IEC 10192-3:2017

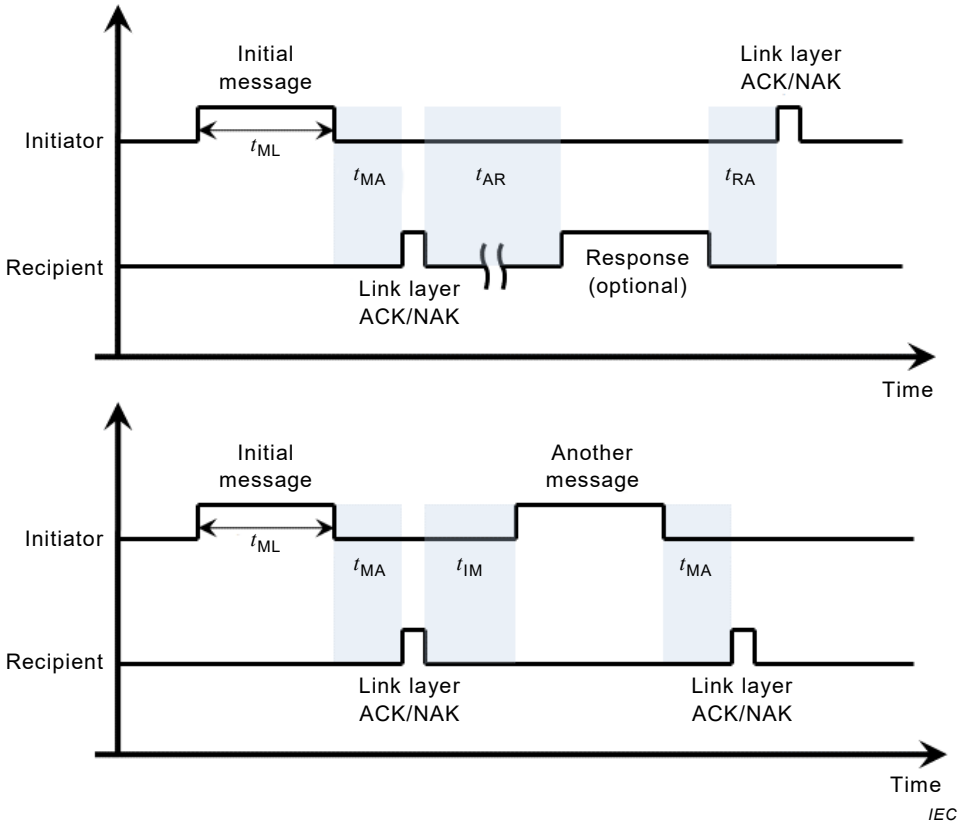

Figure 3 – Link layer timing

The existence of an application-layer response is optional. The Basic DR and Intermediate DR applications specified always result in a response, but other pass-through applications may not.

Table 3 – Message timing requirements

Parameter	Minimum	Maximum	Description
t_{MA}	40 ms	200 ms	Time from the end of a message until the beginning of an associated link layer ACK or NAK.
t_{AR}	100 ms	Maximum determined at application layer	Time from the end of a link layer ACK until the beginning of an application response (if used) from the same device.
t_{RA}	40 ms	200 ms	Time from the end of a response message until the beginning of an associated link layer ACK or NAK.
t_{IM}	100 ms	Maximum determined at application layer	Time from the end of a link layer ACK or NAK until the beginning of another message sent in the same direction. This parameter applies to applications that may send multiple messages in the same direction with no response in between. The requirement of 1 second applies only to “grouped” Basic DR messages that are intended to be processed collectively. Otherwise there is no maximum.
T_{ML}	N/A	500 ms	Maximum message duration, from beginning of first byte to end of last byte. NOTE Manufacturer needs to verify that any chosen payload/bitrate combination supports this requirement. (payload length / bitrate ≤ 500 ms)

Documents
Document Sharing Hub
Full document details: BS ISO/IEC 10192-3:2017

6.6.3 Randomized link layer retries

The link layer may determine failure from either lack of a response within the allowed time or from a link layer NAK with an error code indicating that the message was corrupted. Three retries are recommended at the link layer, with a randomized delay between each retry of 100 ms to 2 000 ms. Additional error recovery may exist at the application layer but the specific handling of such is outside the scope of this document.

6.6.4 Application layer timing

Application layer timing shall not violate any of the link layer requirements specified in Table 3. For pass-through application protocols, the application layer timing is outside the scope of this document.

For the Basic DR and Intermediate DR messages specified is this document, the timing parameters are illustrated in Figure 4 and specified in Table 4.

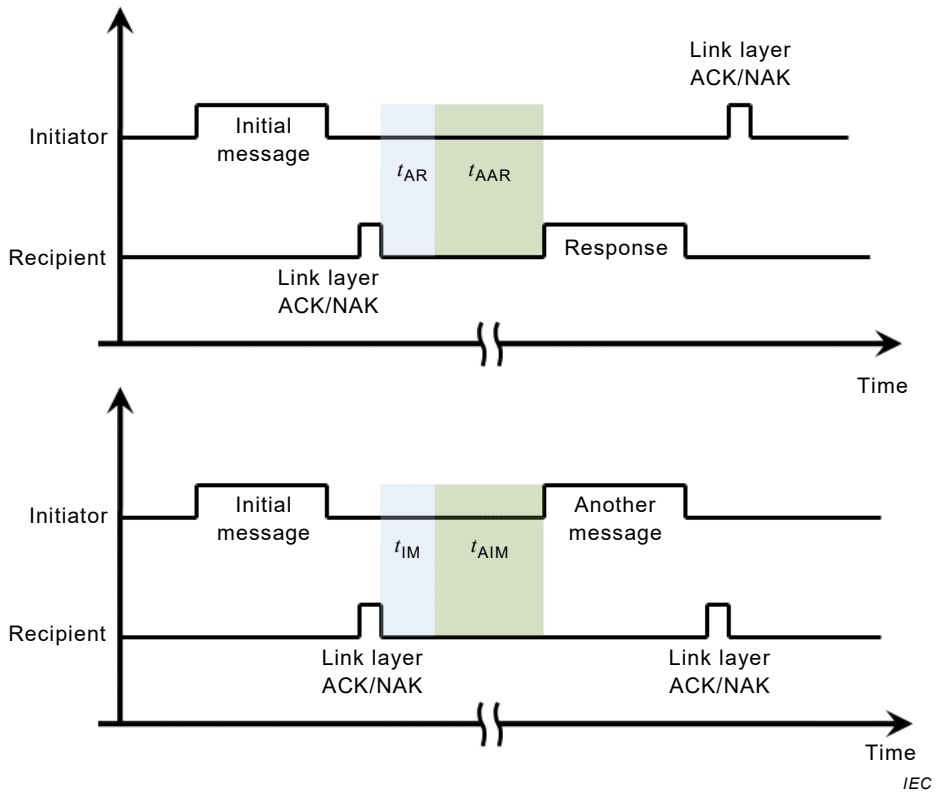

Figure 4 – Application layer timing

Documents
Document Sharing Hub
Full document details: BS ISO/IEC 10192-3:2017

Table 4 – Basic/Intermediate DR application layer timing parameters

Parameter	Minimum	Maximum	Description
t_{AAR}	0 ms	3 000 ms	For all application messages from alternating sides of the interface: Additional time, as shown in Figure 4, following a link layer ACK, and associated link layer delay, until the beginning of an application response.
t_{AIM}	0 ms	1 000 ms for grouped messages, unlimited otherwise	For all application messages from the same side of the interface: Additional time, as shown in Figure 4, following a link layer ACK or NAK, and associated link layer delay, until the beginning of another message or retry from the same sending device.

6.7 SGD handling of conflicting messages

This document supports multiple possible application layer protocols, including the Basic and Intermediate DR commands specified herein in addition to the pass-through of other industry and standard protocols. Among these varied protocols are many different commands related to demand response. It is the responsibility of the UCM, and the system in which it participates, to provide SGDs with single, clear indications of the conditions at any time.

In the event that an SGD is presented with conflicting curtailment mode actions, the curtailment mode triggered by the last command received of equal or greater priority shall take precedence. For example, a cost triggered load change should not override a shed command.

The priority of commands in the Basic DR (Clause 10) and Intermediate DR (Clause 11) applications are indicated in the “Priority:” sub-row of the “Usage” column in Table 14. If the curtailment mode triggered by a command of priority "High" is currently active, only another command of priority "High" shall be acted on by the SGD and replace the current curtailment mode. If the curtailment mode triggered by a command of priority "Low" is currently active, then the most recently received command of either priority "Low" or "High" shall be acted on by the SGD and replace the current curtailment mode. For the special case of commands with priority "Low" where the information is being used for display purposes only (such as displaying the current price) then it may be displayed by the SGD during an active priority "High" command, but not affect the curtailment mode caused by the “High” command. Commands with priority "Not Applicable" are not related to curtailment and shall be acted upon as soon as received.

7 Simple Protocol

If a pass-through protocol from Clause 13 is not implemented, the Simple Protocol shall be implemented. The Simple Protocol includes many message types and commands, but very few are mandatory. The messages are grouped into several types, including a set of data-link messages, Basic and Intermediate DR application messages, and advanced protocol pass-through messages. To assure compatibility between systems for demand response applications that are compliant with the document, UCMs and SGDs shall support the messages below, each of which is limited to 8 bytes length. Devices may optionally support additional messages as desired.

These messages are defined in Clause 10. The mandatory messages are shown in Table 5.

Documents
Document Sharing Hub

Full document details: BS ISO/IEC 10192-3:2017

Table 5 – Mandatory message summary

Mandatory message	Layer	Description
Shed	Basic DR Application	Fixed, 8 bytes
End Shed	Basic DR Application	Fixed, 8 bytes
Application ACK/NAK	Basic DR Application	Fixed, 8 bytes
Outside Communication Connection Status	Basic DR Application	Fixed, 8 bytes
Link Layer ACK/NAK	Link Layer	Fixed, 2 bytes See 8.2
Message Type Supported Query	Link Layer	Fixed, 6 bytes See 8.3

The establishment of mandatory messages is necessary in order to guarantee that any DR communications system, when connected to any end-device, may still provide basic demand responsiveness. The mandatory list has been minimized in recognition that many present demand response systems provide only on/off control information and many end-devices have only on/off response capabilities.

8 Link layer

8.1 Use of link layer messages

Link Layer ACK and NAK messages shall be supported and used in response to all messages except other link layer ACKs and NAKs (i.e. do not ACK an ACK). The Message Type "supported query", specified in 8.3, is also required.

8.2 Link layer ACK/NAK

All packets shall result in a link layer ACK or NAK as shown in Figure 3. ACKs and NAKs are both two byte packets as shown in Table 6. NAKs are used to indicate that the packet was not accepted or understood.

Table 6 – ACK/NAK Packet

Type	Byte 1	Byte 2
ACK	0x06	0x00
NAK	0x15	NAK Code

Table 7 lists the NAK codes and uses.

Documents
Document Sharing Hub
Full document details: BS ISO/IEC 10192-3:2017

Table 7 – Link layer NAK codes

Link NAK error code	Priority	Description	Usage
0x00		No Reason	Not used.
0x01	1	Invalid Byte	Indicates that a byte framing or other invalid byte error has occurred (e.g. missing stop-bit on the AC RS-485 interface).
0x02	2	Invalid Length	Used to indicate that the length indicated in the PDU length field is out of range.
0x03	3	Checksum Error	The bytes in the checksum field at the end of the message did not agree with the computed checksum.
0x04	4	Reserved	N/A
0x05	5	Message Timeout	Indicates that more than t_{ML} (specified in Table 3) elapsed between receipt of the first byte and receipt of the last byte in a message transmission. t_{ML} was selected to allow any combination of data rate and payload. As additional speeds and payloads are added some combinations may be invalid. This error code is not used by the DC form factor, as noted in Annex A.
0x06	6	Unsupported Message Type	Indicates that the “Message Type” is not supported.
0x07	7	Request Not Supported	Indicates that the requested setting is not supported (e.g. a requested Power Mode or Bit Rate is not supported). This error code is used only in regards to link layer requests, not in regards to lack of support for application layer requests.

In the event that multiple errors are detected, the Link NAK Error Code with the lowest priority number shall be returned.

8.3 Message Type “supported query”

Support of the message type “supported query” is mandatory. After power-up, communications modules and end-devices shall begin communication assuming only that the mandatory functions of the Basic DR application are supported. This requires the ability to handle only 8 byte messages, parsing of only a short list of payloads (two required commands), and allows NAK’ing of any unsupported commands.

To determine what message types are supported, the originator (can be either the UCM or the SGD) sends a packet of the message type in question (see Table 2 for the specified message type values) with a 0 length payload as shown in Table 8. If the receiver supports that message type, it shall respond with a Link Layer ACK. If the receiving device does not support the requested message type, it responds with an Unsupported Message Type NAK (see Table 7).

Table 8 – Message type “supported query”

Byte 1	Byte 2	Byte 3	Byte 4	Byte 5	Byte 6
		Reserved	Payload length		
Desired Message Type		0x00	0x00	Checksum	

Case 1 – SGD supports intermediate Message Type:

a) UCM sends 08 02 00 00 7A D0 – Intermediate DR Message Type (0x08 0x02) Supported Query

b) SGD sends 06 00 – Link Layer ACK

AVA Documents Document Sharing Hub

Full document details: BS ISO/IEC 10192-3:2017

Case 2 – UCM does not support NETWORK Message Type:

a) SGD sends 08 04 00 00 72 D6 – Network Message Type (0x08 0x04) Supported Query

b) UCM sends 15 06 – Link Layer NAK, Unsupported Message Type

9 Data-link messages

9.1 Message format

The data-link messages specified in 9.1 are employed to manage link layer optional features. Use and/or support of the data-link messages are all optional, with a lack of support indicating that only the link layer defaults are supported. The data-link commands follow the protocol-data-unit format specified in Table 9, with message type = (0x08, 0x03) and the payload field used as specified in Table 10.

Table 9 – Data-link message format

Message Type = 0x08, 0x03	Reserved, shall be ‘0’	Payload length = 0x00, 0x02	Opcode1	Opcode2	Checksum
2 bytes	3 bits	13 bits	1 byte	1 byte	2 bytes

Documents
Document Sharing Hub

Full document details: BS ISO/IEC 10192-3:2017

Table 10 – Data-link command set

Description	Format	Usage
Request Different Power Mode	(8 bytes total, see Table 9) Opcode1 =0x16 Opcode2 = Power Level Indicator	Sent from the UCM to the SGD to request permission to draw higher power than the default. See 9.2 for “Power Level Indicator” details.
Request Different Bit Rate	(8 bytes total, see Table 9) Opcode1 =0x17 Opcode2 = Bit Rate Indicator	Sent from either the UCM or the SGD to the other to request a shift to a higher Bit Rate. See 9.3 for “Bit Rate Indicator” details.
Query: Maximum payload length?	(8 bytes total, see Table 9) Opcode1 = 0x18 Opcode2 = Default: 0x00, Optional: Max Payload Length Indicator	A query sent from either the UCM or the SGD to the other to ask how long message payloads can be. “Link NAK” means that only the default of 2 payload bytes is supported. If Opcode2 is not 0x00, then it indicates the max payload length code of the sender as described in the Response below. If the Opcode2 is 0x00, then the receiver shall perform a separate query to determine it.
Response: Maximum payload length	(8 bytes total, see Table 9) Opcode1 = 0x19 Opcode2 = Max Payload Length Indicator	Response to an Opcode 0x16 query. Max Payload Length Indicator: 0x00 = 2 (default) 0x01 = 4 0x02 = 8 0x03 = 16 0x04 = 32 0x05 = 64 0x06 = 128 0x07 = 256 0x08 = 512 0x09 = 1024 0x0A = 1280 0x0B = 1500 0x0C = 2048 0x0D = 4096 0x0E to 0xFF reserved
Query: Get SGD Slot Number	(8 bytes total, see Table 9) Opcode1 = 0x1A Opcode2 = 0x00	Query sent from the UCM to the SGD to determine which slot the UCM is installed in.
Response: Slot Number	(8 bytes total, see Table 9) Opcode1 = 0x1B Opcode2 = Slot Number in upper 3 bits	Response to Opcode 0x1A. Slot Number = a value from 0x0n to 0xEn indicating the slot number in which the UCM is installed. The slot number is contained in the upper 3 bits.
Query: Get Available Slot Numbers	(8 bytes total, see Table 9) Opcode1 = 0x1C Opcode2 = 0x00	UCM asking the SGD what slot numbers exist and which are used.

Documents
Document Sharing Hub

Full document details: BS ISO/IEC 10192-3:2017

Description	Format	Usage
Response: Available Slot Numbers	(8 bytes total, see Table 9) Opcode1 = 0x1D Opcode2 = Slot Number Detail	Response to Opcode 0x1C. Slot Number Detail = Bit-field: 0 = Slot does not exist or is not occupied 1 = Slot is occupied Bit 0 (LSbit) = Slot Number 0 … Bit 7 (MSbit) = Slot Number 7
Send Next Command to Slot	(8 bytes total, see Table 9) Opcode1 = 0x1E Opcode2 = Slot Number	Instructs the SGD to forward the next message to the indicated Slot Number. Slot Number = a value from 0x00 to 0x07 indicating the slot number to which the message is to be sent.

9.2 Interface power limit negotiation

UCMs may optionally use this data-link function to request that the power consumption limits be changed to the level indicated by the request. The Opcode2 field, Power Level Indicator, is an enumeration as shown in Table 11.

Table 11 – Interface power level indicator codes

Power level indicator	DC form factor		AC form factor		
	Maximum continuous average	Maximum peak [a]	Maximum continuous average	Maximum peak [a]	Maximum instantaneous [b]
0x00 (default)	50 mA	300 mA	50 mA,rms	300 mA,rms	10 A
0x01	150 mA	2 A	N/A	N/A	N/A
0x02	250[mA	2 A	N/A	N/A	N/A
0x03	500 mA	2 A	N/A	N/A	N/A
0x04	750 mA	2 A	N/A	N/A	N/A
0x05 to 0xFF (Reserved)					

[a] The maximum peak value is allowed for a 100 ms maximum duration, with a 10 % maximum duty cycle in any given second.

[b] The maximum instantaneous value is allowed for 1 ms maximum duration, with a 10 % maximum duty cycle in any given 10-ms period and a 1 % maximum duty cycle in any given 10-s period.

For the DC Form Factor interface, power is supplied at low voltage DC and for the AC Form Factor interface, at the AC line voltage, as specified in the respective physical layer annexes.

All UCMs shall operate within the default power limits until negotiating a higher power with SGD. It is recognized that wired media UCMs may draw power from their media (PoE, PLC, telephone, etc.) if additional power is required from a separate power supply or interface dongle.

This function always results in either a “Link ACK or a “Link NAK” response. “Link ACK” means that the requested power mode is approved. However, in order to request a new power level, the following procedure should be followed to determine support for power mode changes. Any negotiation involving optional message types starts with sending a Message Type Supported Query, the details of which are covered in 8.3. After that initial negotiation, UCMs first send a request for the Power Level Indicator 0x00 (default) and:

Documents
Document Sharing Hub

Full document details: BS ISO/IEC 10192-3:2017

- If the SGD responds with “Link NAK” and error code 0x07, then the Request Different Power Mode message is not supported at all. This follows because Power Level Indicator 0x00 is the default and shall be supported if the Request Different Power Mode message is supported.
- If the SGD ACKs the Power Level Indicator 0x00 (default), then the Request Different Power Mode message is supported. Subsequently, the UCM can request higher power levels (non-default) in succession to determine the power level supported by the SGD.

Case 1 – SGD does not support “Request Different Power Mode” message at all:

a) UCM sends 08 03 00 00 76 D3 – Message Type Supported Query for Data-Link Messages (0x08 0x03)

b) SGD sends 06 00 – Link Layer ACK

c) SGD sends 08 03 00 00 76 D3 – Message Type Supported Query symmetrical response

d) UCM sends 06 00 – Link Layer ACK

e) UCM sends 08 03 00 02 16 00 C0 71 – Power Level Indicator 0x00 (default) Request message

f) SGD sends 15 07 – Link Layer NAK, Request Not Supported Error

Case 2 – SGD supports “Request Different Power Mode” up to level 0x02 (DC form factor only):

a) UCM sends 08 03 00 00 76 D3 – Message Type Supported Query for Data-Link Messages (0x08 0x03)

b) SGD sends 06 00 – Link Layer ACK

c) SGD sends 08 03 00 00 76 D3 – Message Type Supported Query symmetrical response

d) UCM sends 06 00 – Link Layer ACK

e) SGD sends 08 03 00 02 16 00 C0 71 – Power Level Indicator 0x00 (default) Request message

f) UCM sends 06 00 – Link Layer ACK, default power mode and Request message supported

g) SGD sends 08 03 00 02 16 01 BE 72 – Power Level Indicator 0x01 Request message

h) UCM sends 06 00 – Link Layer ACK, Power Level Indicator 0x01 supported

i) SGD sends 08 03 00 02 16 02 BC 73 – Power Level Indicator 0x02 Request message

j) UCM sends 06 00 – Link Layer ACK, Power Level Indicator 0x02 supported

k) SGD sends 08 03 00 02 16 03 BA 74 – Power Level Indicator 0x03 Request message

l) SGD sends 15 07 – Link Layer NAK, Request Not Supported Error, therefore highest power level support is 0x02

9.3 Bit rate negotiation

For the DC Form Factor, this link layer function establishes the maximum rate at which the SGD may clock the SPI interface. For the AC Form Factor with the asynchronous RS-485 serial interface, it establishes the Bit Rate that both the UCM and the SGD shall use in order to communicate with one another. Either UCM or SGD may optionally use this data-link function to request a different Bit Rate than the default or current rate as shown in Table 12.

Documents
Document Sharing Hub

Full document details: BS ISO/IEC 10192-3:2017

Table 12 – Bit rate indicator

Bit rate indicator	**Bit rate** [kbit/s]
0x00	19,2 (default)
0x01	38,4
0x02	57,6
0x03	115,2
0x04	256
0x05	460,8
0x06	921,6
0x07	1843,2
0x08	3686,4
0x09 to 0xFF	Reserved

If the requested Bit Rate is supported, “Link ACK” is immediately returned at the original Bit Rate. Future communication is at the new requested Bit Rate until such time as the units revert to default or a different Bit Rate is requested. “Link NAK” with Error Code 0x07 means that the requested Bit Rate is not supported.

Similar to procedure specified at the end of 9.2, the default Bit Rate Indicator 0x00 should be sent first by the UCM to determine support for the Request Different Bit Rate message. Upon success (Link Layer ACK), the UCM can request higher bit rates using the other indicators.

If no valid communication is exchanged for more than 15 minutes, both SGD and UCM shall return to the default of 19,2 kbit/s as specified in 9.4.

9.4 Power-up and state reset

Upon power cycle, all operational settings shall return to defaults. Any non-default settings (e.g. Bit Rate, Power Level) shall be renegotiated following a power cycle.

The “Outside Communication Connection Status” message specified in Clause 10 requires that a message be sent at least once every 1 minute to 5 minutes. If no valid communication is exchanged for more than 15 minutes, both SGD and UCM shall return to defaults. This includes returning to the default bit rate and UCM’s limiting power consumption to the default levels.

9.5 Security

If present, security shall be handled above the link layer (network, transport and/or application) as specified in Clause 15.

The Basic and Intermediate DR applications’ messages specified in this document do not employ any security mechanisms.

9.6 Setting slot numbering

During initialization, the UCMs in a multiple module system do not have an assigned slot. Each UCM that supports slot numbering shall send a “Get SGD Slot Number” message.

Slot number 0 is reserved for universal communications and for communications in a system that does not support slot numbering.

The mechanism of assigning slot numbers is completely within the domain of the SGD.

AVA Documents
Document Sharing Hub

Full document details: BS ISO/IEC 10192-3:2017

10 Basic DR application (Message Type = 0x08, 0x01)

10.1 Basic DR application commands

10.1.1 Message format

10.1 specifies a set of Basic DR application commands and explains how they are supported by the MCI. Understanding the Basic DR commands is important because even advanced communications modules and devices that may normally use more complex demand response protocols are required to be able to fall back to a few required Basic DR messages in the event that the device to which they are connected is not capable of the same advanced functionality.

There is no nesting of commands, and no requirement for history keeping by the SGD. As noted previously, the last received command of equal or greater priority shall be effective. Because the SGD acts upon the most recently received command, if the device is in Shed state and then receives a CPP or Grid Emergency, the SGD shall understand that the intent is to transition directly into the new event without passing through an “End Shed” state.

Each Basic DR message shall be formatted as shown in Table 13, with the message type being a “0x08, 0x01” and the payload being a 1-byte Opcode1 and a 1-byte Opcode2.

Table 13 – Basic application data format

Message Type = 0x08, 0x01	Reserved, shall be ‘0’	Payload length = 0x00, 0x02	Opcode1	Opcode2	Checksum
2 bytes	3 bits	13 bits	1 byte	1 byte	2 bytes

The Basic DR message payloads are specified in Table 14. High priority messages are noted in red-coloured blocks.

Documents
Document Sharing Hub
Full document details: BS ISO/IEC 10192-3:2017

Table 14 – Basic DR application command set

Description	Opcode1	Opcode2	Usage	Mandatory?	
				for SGDs	for UCMs
Shed	0x01	Event Duration	Sent from the UCM to the SGD when a load-shed event begins. If other load management commands are attempted but not accepted by the SGD, then the UCM shall fall back to this Opcode. See 10.1.3 for description and usage. NOTE Event Durations of 10 minutes or less relate to "spinning reserve" uses. Event Durations greater than 10 minutes relate to "shift" uses. **Priority**: "High"	✓	✓
End Shed/Run Normal	0x02	0x00 (Not Used)	This command shall be sent once from the UCM to the SGD when a load shed or other curtailment event ends, regardless of whether the Event Duration is provided for informational purposes. Curtailment event commands that are terminated by this End Shed include: Shed 0x01, Request for Power Level 0x06, Critical Peak Event 0x0A, Grid Emergency 0x0B, and Load Up 0x17. **Priority**: "High"	✓	✓
Basic Application ACK	0x03	ACK'ed Opcode1	Acknowledge successful receipt and support of previous command. Returned for all supported Opcodes except 0x03 (do not "Application ACK" an "Application ACK") and those that are queries and have a natural response, such as 0x12. **Priority:** "Not Applicable"	✓	✓
Basic Application NAK	0x04	Reason	Reject previous command. Sent from either SGD or UCM to the other when any of the following reasons occur. Reason: 0x00 = No reason given 0x01 = Opcode1 not supported 0x02 = Opcode2 invalid 0x03 = Busy 0x04 = Length Invalid 0x05 to 0xFF Reserved **Priority:** "Not Applicable"	✓	✓

Documents
Document Sharing Hub
Full document details: BS ISO/IEC 10192-3:2017

Description	Opcode1	Opcode2	Usage	Mandatory?	
				for SGDs	for UCMs
Request for Power Level	0x06	Percent Setting	Sent from the UCM to the SGD to request that its average Power Level (relative to the full rating of the device) be reduced to a level between 0 and 100 % of full value on a 7 bit precision scale. Percent Setting: MSbit = 0, Least significant 7 bits: 0x00 to 0x7F = 0 to 100% power absorbed MSbit = 1, Least significant 7 bits: 0x00 to 0x7F = 0 to 100 % power produced Details regarding the use of this command are provided in 10.2.1. **Priority**: "High"		
Present Relative Price	0x07	Relative Price Indicator	Sent from the UCM to the SGD when a change in relative price occurs to inform of the new relative price. Relative Price Indicator: See 10.2.2 for description and usage. If NAK'ed, UCM shall use Opcodes 0x01 and 0x02 to inform SGDs. **Priority:** "Low"		
Next Period Relative Price	0x08	Relative Price Indicator	Sent from the UCM to the SGD when a change in relative price occurs to inform of the relative price in the next future period. Relative Price Indicator: See 10.2.2 for description and usage. **Priority:** "Low"		
Time Remaining in Present Price Period	0x09	Event Duration	Sent from the UCM to the SGD when a change in price occurs to inform of the duration of the present price period. Event Duration: See 10.1.3 for description and usage. **Priority**: "Low"		
Critical Peak Event	0x0A	Event Duration	Critical Peak Event is in Effect (Critical Peak Events are intended to represent events that occur only a few times per year, on system peak days, for a maximum duration determined by the terms of the programme) Sent once from the UCM to the SGD when a critical peak price event goes into effect. If NAK'ed, send Opcode 0x01. Event Duration: See 10.1.3 for description and usage. **Priority:** "High"		
Grid Emergency	0x0B	Event Duration	A Grid Emergency is occurring. Sent once from the UCM to the SGD when a grid emergency event goes into effect. If NAK'ed, send Opcode 0x01. Event Duration: See 10.1.3 for description and usage. **Priority**: "High"		

AVA Documents
Document Sharing Hub
Full document details: BS ISO/IEC 10192-3:2017