BS ISO/IEC 10373-7:2019

BSI Standards Publication

Cards and security devices for personal identification — Test methods

Part 7: Contactless vicinity objects

Documents
Document Sharing Hub

Full document details: BS ISO/IEC 10373-7:2019

National foreword

This British Standard is the UK implementation of ISO/IEC 10373-7:2019. It supersedes BS ISO/IEC 10373-7:2008, which is withdrawn.

The UK participation in its preparation was entrusted to Technical Committee IST/17, Cards and security devices for personal identification.

A list of organizations represented on this committee can be obtained on request to its secretary.

This publication does not purport to include all the necessary provisions of a contract. Users are responsible for its correct application.

© The British Standards Institution 2019
Published by BSI Standards Limited 2019

ISBN 978 0 580 52197 3

ICS 35.240.15

Compliance with a British Standard cannot confer immunity from legal obligations.

This British Standard was published under the authority of the Standards Policy and Strategy Committee on 31 October 2019.

Amendments/corrigenda issued since publication

Date	Text affected

Documents
Document Sharing Hub

Full document details: BS ISO/IEC 10373-7:2019

INTERNATIONAL STANDARD

ISO/IEC 10373-7

Third edition
2019-10

Cards and security devices for personal identification — Test methods —

Part 7: Contactless vicinity objects

Cartes et dispositifs de sécurité pour l'identification personnelle — Méthodes d'essai —

Partie 7: Objets sans contact de voisinage

Reference number
ISO/IEC 10373-7:2019(E)

© ISO/IEC 2019

Full document details: BS ISO/IEC 10373-7:2019

COPYRIGHT PROTECTED DOCUMENT

© ISO/IEC 2019

All rights reserved. Unless otherwise specified, or required in the context of its implementation, no part of this publication may be reproduced or utilized otherwise in any form or by any means, electronic or mechanical, including photocopying, or posting on the internet or an intranet, without prior written permission. Permission can be requested from either ISO at the address below or ISO's member body in the country of the requester.

ISO copyright office
CP 401 • Ch. de Blandonnet 8
CH-1214 Vernier, Geneva
Phone: +41 22 749 01 11
Fax: +41 22 749 09 47
Email: copyright@iso.org
Website: www.iso.org

Published in Switzerland

© ISO/IEC 2019 – All rights reserved

Documents
Document Sharing Hub

Full document details: BS ISO/IEC 10373-7:2019

Contents

Page

Foreword ... **v**

1 Scope ... **1**

2 Normative reference(s) ... **1**

3 Terms, definitions, symbols and abbreviated terms ... **1**
3.1 Terms and definitions ... 1
3.2 Symbols and abbreviated terms ... 2

4 Default items applicable to the test methods ... **2**
4.1 Test environment ... 2
4.2 Pre-conditioning ... 2
4.3 Default tolerance ... 2
4.4 Spurious inductance ... 2
4.5 Total measurement uncertainty ... 2

5 Static electricity test ... **3**

6 Test apparatus and test circuits ... **3**
6.1 General ... 3
6.2 Calibration coil card ... 3
6.2.1 General ... 3
6.2.2 Size of the calibration coil card ... 3
6.2.3 Thickness and material of the calibration coil card ... 3
6.2.4 Coil characteristics ... 3
6.3 Test VCD assembly ... 4
6.3.1 General ... 4
6.3.2 Test VCD antenna ... 5
6.3.3 Sense coils ... 6
6.3.4 Assembly of test VCD ... 6
6.4 Reference VICCs ... 6
6.4.1 General ... 6
6.4.2 Reference VICC for VCD power ... 7
6.4.3 Reference VICC for load modulation test ... 7
6.4.4 Dimensions of the reference VICCs ... 7
6.4.5 Thickness of the reference VICC board ... 7
6.4.6 Coil characteristics ... 7
6.5 Digital sampling oscilloscope ... 8

7 Functional test — VICC ... **8**
7.1 Purpose ... 8
7.2 Test procedure ... 8
7.3 Test report ... 8

8 Functional test — VCD ... **9**
8.1 VCD field strength and power transfer ... 9
8.1.1 Purpose ... 9
8.1.2 Test procedure ... 9
8.1.3 Test report ... 9
8.2 Modulation index and waveform ... 10
8.2.1 Purpose ... 10
8.2.2 Test procedure ... 10
8.2.3 Test report ... 10
8.3 Load modulation reception ... 10

9 Additional test methods ... **10**
9.1 Additional VICC test methods ... 10
9.2 Additional VCD test methods ... 10

Annex A (normative) **Test VCD antenna** ... **14**

© ISO/IEC 2019 – All rights reserved

AVA Documents
Document Sharing Hub

Full document details: BS ISO/IEC 10373-7:2019

Annex B (informative) **Test VCD antenna tuning** **14**
Annex C (normative) **Sense coil** **17**
Annex D (normative) **Reference VICC for VCD power test** **19**
Annex E (informative) **Reference VICC for load modulation test** **21**
Annex F (informative) **Program for evaluation of the spectrum** **23**
Annex G (normative) **Additional VICC test methods** **27**
Annex H (normative) **Additional VCD test methods** **49**
Bibliography **51**

© ISO/IEC 2019 – All rights reserved
Documents
Document Sharing Hub
Full document details: BS ISO/IEC 10373-7:2019

Foreword

ISO (the International Organization for Standardization) and IEC (the International Electrotechnical Commission) form the specialized system for worldwide standardization. National bodies that are members of ISO or IEC participate in the development of International Standards through technical committees established by the respective organization to deal with particular fields of technical activity. ISO and IEC technical committees collaborate in fields of mutual interest. Other international organizations, governmental and non-governmental, in liaison with ISO and IEC, also take part in the work. In the field of information technology, ISO and IEC have established a joint technical committee, ISO/IEC JTC 1.

The procedures used to develop this document and those intended for its further maintenance are described in the ISO/IEC Directives, Part 1. In particular the different approval criteria needed for the different types of document should be noted. This document was drafted in accordance with the editorial rules of the ISO/IEC Directives, Part 2 (see www.iso.org/directives).

Attention is drawn to the possibility that some of the elements of this document may be the subject of patent rights. ISO and IEC shall not be held responsible for identifying any or all such patent rights. Details of any patent rights identified during the development of the document will be in the Introduction and/or on the ISO list of patent declarations received (see www.iso.org/patents).

Any trade name used in this document is information given for the convenience of users and does not constitute an endorsement.

For an explanation of the voluntary nature of standards, the meaning of ISO specific terms and expressions related to conformity assessment, as well as information about ISO's adherence to the World Trade Organization (WTO) principles in the Technical Barriers to Trade (TBT) see www.iso.org/iso/foreword.html.

This document was prepared by Technical Committee ISO/IEC JTC 1, *Information technology*, Subcommittee SC 17, *Cards and security devices for personal identification*.

This third edition cancels and replaces the second edition (ISO/IEC 10373-7:2008), which has been technically revised.

The main changes compared to the previous edition are as follows:

— Annex G and Annex H have been added.

A list of all parts in the ISO/IEC 10373 series can be found on the ISO website.

Any feedback or questions on this document should be directed to the user's national standards body. A complete listing of these bodies can be found at https://www.iso.org/members.html.

© ISO/IEC 2019 – All rights reserved

Documents
Document Sharing Hub
Full document details: BS ISO/IEC 10373-7:2019

Documents
Document Sharing Hub

Cards and security devices for personal identification — Test methods —

Part 7: Contactless vicinity objects

1 Scope

The ISO/IEC 10373 series defines test methods for characteristics of identification cards according to the definition given in ISO/IEC 7810. Each test method is cross-referenced to one or more base standards, which can be ISO/IEC 7810 or one or more of the supplementary standards that define the information storage technologies employed in identification card applications.

NOTE 1 Criteria for acceptability do not form part of the ISO/IEC 10373 series, but can be found in the International Standards mentioned above.

NOTE 2 Test methods defined in the ISO/IEC 10373 series are intended to be performed separately. A given card is not required to pass through all the tests sequentially.

This document deals with test methods, which are specific to contactless integrated circuit card (vicinity card) technology. ISO/IEC 10373-1 deals with test methods which are common to one or more ICC technologies and other parts in the ISO/IEC 10373 series deal with other technology-specific tests.

Unless otherwise specified, the tests in this document apply exclusively to vicinity cards defined in ISO/IEC 15693-1, ISO/IEC 15693-2 and ISO/IEC 15693-3.

2 Normative reference(s)

The following documents are referred to in the text in such a way that some or all of their content constitutes requirements of this document. For dated references, only the edition cited applies. For undated references, the latest edition of the referenced document (including any amendments) applies.

ISO/IEC 7810, *Identification cards — Physical characteristics*

ISO/IEC 15693-1:2018, *Cards and security devices for personal identification — Contactless vicinity objects — Part 1: Physical characteristics*

ISO/IEC 15693-2:2019, *Cards and security devices for personal identification — Contactless vicinity objects — Part 2: Air interface and initialization*

ISO/IEC 15693-3:2019, *Cards and security devices for personal identification — Contactless vicinity objects — Part 3: Anticollision and transmission protocol*

3 Terms, definitions, symbols and abbreviated terms

3.1 Terms and definitions

For the purposes of this document, the following terms and definitions apply.

ISO and IEC maintain terminological databases for use in standardization at the following addresses:

— ISO Online browsing platform: available at https://www.iso.org/obp

© ISO/IEC 2019 – All rights reserved

Documents Document Sharing Hub
Full document details: BS ISO/IEC 10373-7:2019

— IEC Electropedia: available at http://www.electropedia.org/

3.1.1
base standard
standard which the *test method* (3.1.2) is used to verify conformance to

3.1.2
test method
method for testing characteristics of identification cards for the purpose of confirming their compliance with International Standards

3.2 Symbols and abbreviated terms

DUT	device under test
ESD	electrostatic discharge
f_c	frequency of the operating field
f_{s1}, f_{s2}	frequencies of the subcarriers
H_{max}	maximum field strength of the VCD antenna field
H_{min}	minimum field strength of the VCD antenna field
VCD	vicinity coupling device
VICC	vicinity card

4 Default items applicable to the test methods

4.1 Test environment

Unless otherwise specified, testing shall take place in an environment of temperature 23 °C ± 3 °C (73 °F ± 5 °F) and of relative humidity 40 % to 60 %.

4.2 Pre-conditioning

Where pre-conditioning is required by the test method, the identification cards to be tested shall be conditioned to the test environment for a period of 24 h before testing.

4.3 Default tolerance

Unless otherwise specified, a default tolerance of ±5 % shall be applied to the quantity values given to specify the characteristics of the test equipment (e.g. linear dimensions) and the test method procedures (e.g. test equipment adjustments).

4.4 Spurious inductance

Resistors and capacitors should have negligible inductance.

4.5 Total measurement uncertainty

The total measurement uncertainty for each quantity determined by these test methods shall be stated in the test report.

Basic information is given in ISO/IEC Guide 98-3.

© ISO/IEC 2019 – All rights reserved
Documents
Document Sharing Hub
Full document details: BS ISO/IEC 10373-7:2019

5 Static electricity test

ISO/IEC 10373-1 defines test methods which are common to one or more integrated circuit card technologies and other parts in the ISO/IEC 10373 series deal with other technology specific tests.

6 Test apparatus and test circuits

6.1 General

This clause defines the test apparatus and test circuits for verifying the operation of a VICC or a VCD according to ISO/IEC 15693-2 and ISO/IEC 15693-3. The test apparatus includes:

— calibration coil (see 6.2),

— test VCD assembly (see 6.3),

— reference VICC (see 6.4),

— digital sampling oscilloscope (see 6.5).

6.2 Calibration coil card

6.2.1 General

This subclause defines the size, thickness and characteristics of the calibration coil.

6.2.2 Size of the calibration coil card

The calibration coil card consists of an area, which shall have the height and width defined in ISO/IEC 7810 for ID-1 type containing a single turn coil concentric with the card outline (see Figure 1).

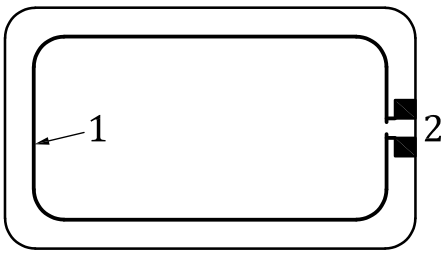

Key

1 coil 72 × 42 mm (1 turn)

2 connections

Figure 1 — Calibration coil for ISO/IEC 7810 ID-1 outline

6.2.3 Thickness and material of the calibration coil card

The thickness of the calibration coil card shall be 0,76 mm with a tolerance of ±10 %. It shall be constructed of a suitable insulating material.

6.2.4 Coil characteristics

The coil on the calibration coil card shall have one turn. The relative dimensional tolerance shall be ±2 %. The outer size of the coil shall be 72 mm × 42 mm with corner radius 5 mm.

NOTE 1 The area over which the field is integrated is approximately 3 000 mm^2.

© ISO/IEC 2019 – All rights reserved

Documents
Document Sharing Hub
Full document details: BS ISO/IEC 10373-7:2019

The coil is made as a printed coil on PCB plated with 35 µm copper. Track width shall be 500 µm with a relative tolerance of ±20 %. The size of the connection pads shall be 1,5 mm × 1,5 mm.

NOTE 2 At 13,56 MHz the approximate inductance is 200 nH and the approximate resistance is 0,25 Ω.

A high impedance oscilloscope probe (e.g. >1 MΩ, <14 pF) shall be used to measure the (open circuit) voltage in the coil. The resonance frequency of the whole set (calibration coil, connecting leads and probe) shall be above 60 MHz.

NOTE 3 A parasitic capacitance of the probe assembly of less than 35 pF normally ensures a resonant frequency for the whole set of greater than 60 MHz.

The open circuit calibration factor for this coil is 0,32 V (rms) per A/m (rms) [equivalent to 900 mV (peak-to-peak) per A/m (rms)].

6.3 Test VCD assembly

6.3.1 General

The test VCD assembly for load modulation consists of a 150 mm diameter VCD antenna and two parallel sense coils: sense coil a; and sense coil b. The test set-up is shown in Figure 2. The sense coils are connected such that the signal from one coil is in an opposite phase to the other. The 10 Ω potentiometer P1 serves to fine adjust the balance point when the sense coils are not loaded by a VICC or any magnetically coupled circuit. The capacitive load of the probe including its parasitic capacitance shall be less than 14 pF.

© ISO/IEC 2019 – All rights reserved
Documents
Document Sharing Hub
Full document details: BS ISO/IEC 10373-7:2019

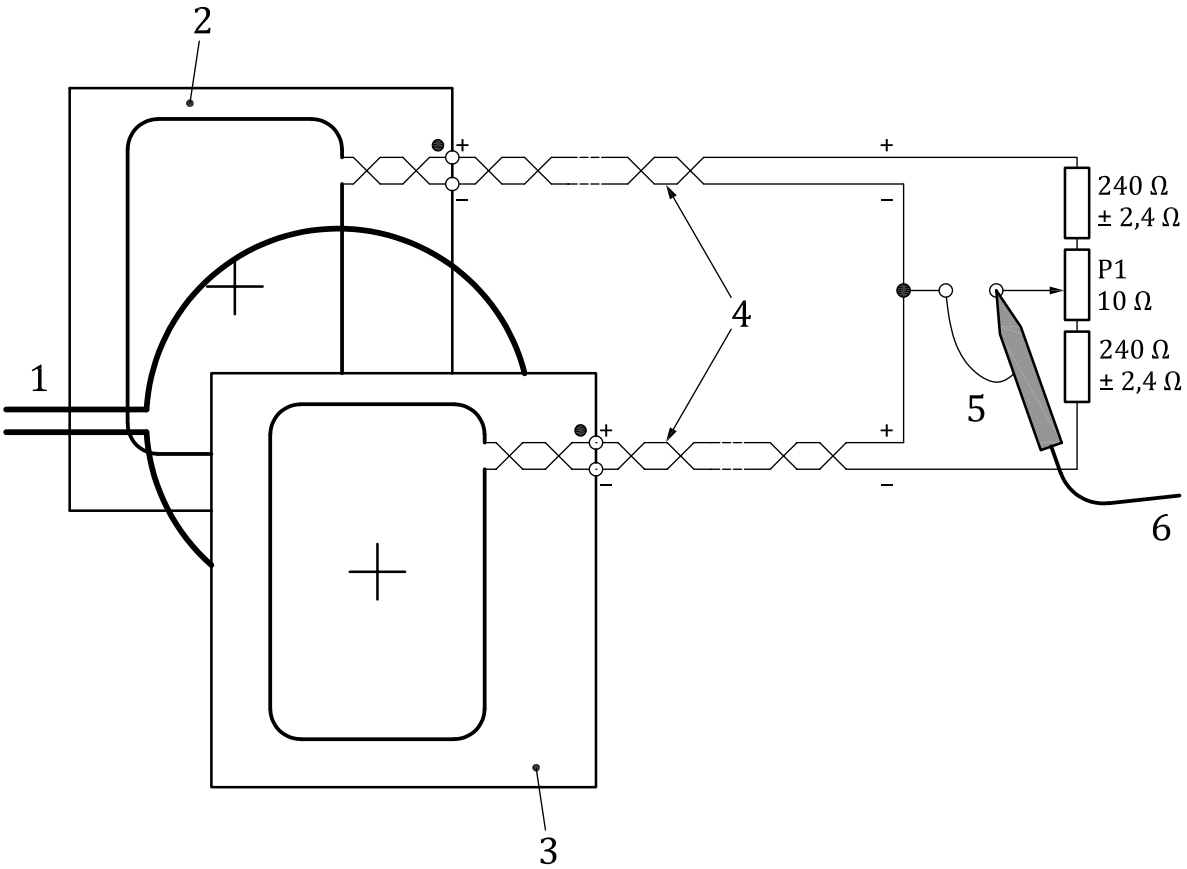

Key

1 VCD antenna
2 sense coil b
3 sense coil a
4 identical length of twisted pairs with less than 150 mm.
5 probe
6 to oscilloscope
P1 potentiometer

Figure 2 — Load modulation test circuit

The maximum length of 150 mm of the twisted pairs takes the wider spacing of the sense coils in comparison to the set-up in ISO/IEC 10373-6 into account.

In order to avoid any unintended misalignment in case of an unsymmetrical set-up the tuning range of the potentiometer P1 is only 10 Ω. If the set-up cannot be compensated by the 10 Ω potentiometer P1 the overall symmetry of the set-up should be checked.

The capacitance of the connections and oscilloscope probe should be kept to a minimum for reproducibility.

The high impedance oscilloscope probe ground connection should be as short as possible, less than 20 mm or coaxial connection.

6.3.2 Test VCD antenna

The test VCD antenna shall have a diameter of 150 mm and its construction shall conform to the drawings in Annex A. The tuning of the antenna may be accomplished with the procedure given in Annex B.

© ISO/IEC 2019 – All rights reserved

Documents
Document Sharing Hub
Full document details: BS ISO/IEC 10373-7:2019

6.3.3 Sense coils

The size of the sense coils is 100 mm × 70 mm. The sense coil construction shall conform to the drawings in Annex C.

6.3.4 Assembly of test VCD

The sense coils and test VCD antenna are assembled in parallel, with the sense and antenna coils coaxial and such that the distance between the active conductors is 100 mm as in Figure 3. The distance between the coil in the DUT and the calibration coil shall be equal with respect to the coil of the test VCD antenna.

Dimensions in millimetres

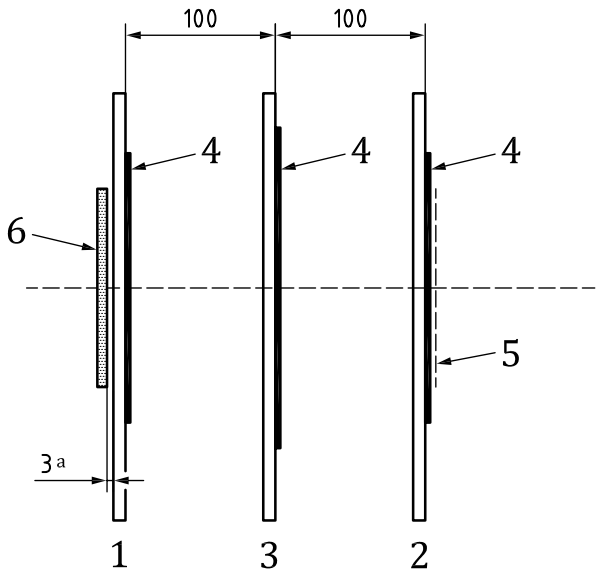

Key

1 sense coil a
2 sense coil b
3 VCD antenna
4 active conductors
5 calibration coil
6 DUT
a 3 mm air spacing.

NOTE 1 The distance of 100 mm reflects a larger read distance and the 3mm air spacing avoids parasitic effects such as detuning by closer spacing or ambiguous results due to noise and other environmental effects.

NOTE 2 Drawings are not to scale.

Figure 3 — Test VCD assembly

6.4 Reference VICCs

6.4.1 General

Reference VICCs are defined

— to test H_{min} and H_{max} produced by a VCD (under conditions of loading by a VICC);

— to test the ability of a VCD to power a VICC;

© ISO/IEC 2019 – All rights reserved
Documents
Document Sharing Hub
Full document details: BS ISO/IEC 10373-7:2019

— to detect the minimum load modulation signal from the VICC.

6.4.2 Reference VICC for VCD power

Annex D shows the schematic the power test shall use. Power dissipation can be set by the resistor R1 or R2 respectively in order to measure H_{max} and H_{min} as defined in 8.1.2. The resonant frequency can be adjusted with C2.

6.4.3 Reference VICC for load modulation test

A suggested schematic for the load modulation test is shown in Annex E. The load modulation can be chosen to be resistive or reactive.

This reference VICC is calibrated by using the test VCD assembly as follows:

The reference VICC is placed in the position of the DUT. The load modulation signal amplitude is measured as described in 7.2. This amplitude should correspond to the minimum amplitude at all values of field strength required by the base standard.

6.4.4 Dimensions of the reference VICCs

The reference VICCs consist of an area containing the coils which has the height and width defined in ISO/IEC 7810 for ID-1 type. An area external to this, containing the circuitry which emulates the required VICC functions, is appended in a way as to allow insertion into the test set-ups described below and so as to cause no interference to the tests. The dimensions shall be as in Figure 4.

Dimensions in millimetres

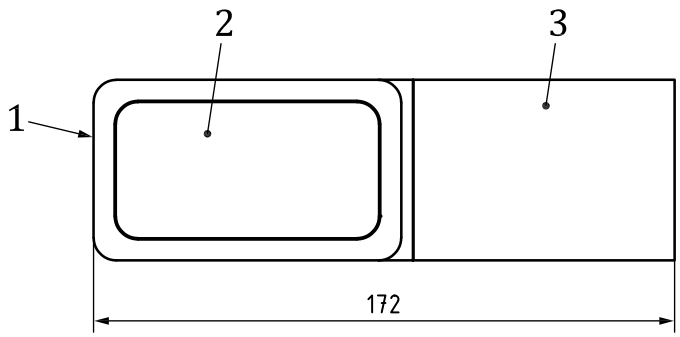

Key

1 outline ISO/IEC 7810 ID-1 type

2 coil

3 circuitry

NOTE Drawings are not to scale.

Figure 4 — Reference VICC dimensions

6.4.5 Thickness of the reference VICC board

The thickness of the reference VICC active area shall be 0,76 mm, with a tolerance of ±10 %.

6.4.6 Coil characteristics

The coil in the active area of the reference VICC shall have 4 turns and shall be concentric with the area outline.

The outer size of the coils shall be 72 mm × 42 mm with relative tolerance of ±2 %.

© ISO/IEC 2019 – All rights reserved

Documents
Document Sharing Hub
Full document details: BS ISO/IEC 10373-7:2019

The coil is printed on PCB plated with 35 µm copper.

Track width and spacing shall be 500 µm with a relative tolerance of ±20 %.

6.5 Digital sampling oscilloscope

The digital sampling oscilloscope shall be capable of sampling at a rate of at least 100 million samples per second with a resolution of at least 8 bits at optimum scaling. The oscilloscope should have the capability to output the sampled data as a text file to facilitate mathematical and other operations such as windowing on the sampled data using external software programmes (Annex F).

7 Functional test — VICC

7.1 Purpose

The purpose of this test is to determine the amplitude of the VICC load modulation signal within the operating field range [H_{min}, H_{max}] as specified in ISO/IEC 15693-2:2019, 6.3 and the functionality of the VICC with the modulation under emitted fields as defined in ISO/IEC 15693-2:2019, Figure 1 and Figure 2.

7.2 Test procedure

Step 1: The load modulation test circuit of Figure 2 and the test VCD assembly of Figure 3 are used.

The RF power delivered by the signal generator to the test VCD antenna shall be adjusted to the required field strength and modulation waveforms as measured by the calibration coil without any VICC. The output of the load modulation test circuit of Figure 2 is connected to a digital sampling oscilloscope. The 10 Ω potentiometer P1 shall be trimmed to minimise the residual carrier. This signal shall be at least 40 dB lower than the signal obtained by shorting one sense coil.

Step 2: The VICC under test shall be placed in the DUT position, concentric and aligned with sense coil a. The RF drive into the test VCD antenna shall be re-adjusted to the required field strength.

Care should be taken to apply a proper synchronization method for low amplitude load modulation.

Exactly two subcarrier cycles of the sampled modulation waveform shall be Fourier transformed. A discrete Fourier transformation with a scaling such that a pure sinusoidal signal results in its peak magnitude shall be used. To minimize transient effects, a subcarrier cycle immediately following a non-modulating period shall be avoided. In case of two subcarrier frequencies this procedure shall be repeated for the second subcarrier frequency.

The resulting amplitudes of the two upper sidebands at f_c+f_{s1} and f_c+f_{s2} and the two lower sidebands at f_c-f_{s1} and f_c-f_{s2}, respectively, shall be above the value defined in 8.2 of the base standard.

An appropriate command sequence as defined in ISO/IEC 15693-3 shall be sent by the reference VCD to obtain a signal or load modulation response from the VICC.

7.3 Test report

The test report shall give the measured amplitudes of the upper sidebands at f_c+f_{s1} and f_c+f_{s2} and the lower sidebands at f_c-f_{s1} and f_c-f_{s2} and the applied fields and modulations.

© ISO/IEC 2019 – All rights reserved
Documents
Document Sharing Hub
Full document details: BS ISO/IEC 10373-7:2019

8 Functional test — VCD

8.1 VCD field strength and power transfer

8.1.1 Purpose

This test measures the field strength produced by a VCD with its specified antenna in its operating volume as defined in accordance with the base standard. The test procedure of 8.1.2 is also used to determine that the VCD with its specified antenna shall generate a field not higher than the value specified in ISO/IEC 15693-1:2018, 4.3.

This test uses a reference VICC as defined in Annex D to determine that a specific VCD to be tested is able to supply a certain power to a VICC placed anywhere within the defined operating volume.

8.1.2 Test procedure

Procedure for H_{max} test:

1) Set Jumper J1 to position 'a' to activate R1.

2) Tune the reference VICC to 13,56 MHz.

   NOTE The resonance frequency of the reference VICC is measured by using an impedance analyser or a LCR-meter connected to a calibration coil. The coil of the reference VICC is placed on the calibration coil with (3 ± 0.3) mm spacing, with the axes of the two coils being congruent. The resonance frequency is that frequency at which the reactive part of the measured complex impedance is at maximum.

3) Set Jumper J1 to position “b” to activate R2.

4) Calibrate the reference VICC in the test VCD assembly set to produce H_{max} operating condition for an output voltage of V_{DC} = 3 V by adjusting R2.

5) Position the reference VICC within the defined operating volume of VCD under test.

6) The DC voltage (V_{DC}) across resistor R3 (Annex D) is measured with a high impedance voltmeter and shall not exceed 3 V.

Procedure for H_{min} test:

1) Set Jumper J1 to position “a” to activate R1.

2) Tune the reference VICC to 13,56 MHz.

3) Calibrate the reference VICC in the test VCD assembly set to produce H_{min} operating condition for an output voltage of V_{DC} = 3 V by adjusting R1.

4) Position the reference VICC within the defined operating volume of the VCD under test.

5) The DC voltage (V_{DC}) across resistor R3 is measured with a high impedance voltmeter and shall exceed 3 V.

8.1.3 Test report

The test report shall give the measured values for V_{DC} at H_{min} and H_{max} under the defined conditions.

© ISO/IEC 2019 – All rights reserved

Documents
Document Sharing Hub
Full document details: BS ISO/IEC 10373-7:2019

8.2 Modulation index and waveform

8.2.1 Purpose

This test is used to determine the index of modulation of the VCD field as well as the rise and fall times and the overshoot values as defined in ISO/IEC 15693-2:2019, Figure 1 and Figure 2 within the defined operating volume.

8.2.2 Test procedure

The calibration coil is positioned anywhere within the defined operating volume, and the modulation index and waveform characteristics are determined from the induced voltage on the coil displayed on a suitable oscilloscope.

8.2.3 Test report

The test report shall give the measured modulation index of the VCD field, the rise and fall times and the overshoot values as defined in ISO/IEC 15693-2:2019, Figure 1 and Figure 2 within the defined volume.

8.3 Load modulation reception

This test may be used to verify that a VCD correctly detects the load modulation of a VICC which conforms to the base standard. It is supposed that the VCD has means to indicate correct reception of the subcarrier(s) produced by a test VICC.

Annex E shows a circuit which can be used in conjunction with the test apparatus to determine the sensitivity of a VCD to load modulation within the defined operating volume.

9 Additional test methods

9.1 Additional VICC test methods

The test methods shall be carried out as specified in Annex G.

9.2 Additional VCD test methods

The test methods shall be carried out as specified in Annex H.

© ISO/IEC 2019 – All rights reserved
Documents
Document Sharing Hub
Full document details: BS ISO/IEC 10373-7:2019