BS ISO/IEC 10373-8:2011

BSI Standards Publication

Identification cards — Test methods

Part 8: USB-ICC

bsi.

...making excellence a habit.™

Document Sharing Hub

Full document details: BS ISO/IEC 10373-8:2011

National foreword

This British Standard is the UK implementation of ISO/IEC 10373-8:2011.

The UK participation in its preparation was entrusted to Technical Committee IST/17, Cards and personal identification.

A list of organizations represented on this committee can be obtained on request to its secretary.

This publication does not purport to include all the necessary provisions of a contract. Users are responsible for its correct application.

© BSI 2011

ISBN 978 0 580 63678 3

ICS 35.240.15

Compliance with a British Standard cannot confer immunity from legal obligations.

This British Standard was published under the authority of the Standards Policy and Strategy Committee on 30 April 2011.

Amendments issued since publication

Date	Text affected

Documents
Document Sharing Hub

Full document details: BS ISO/IEC 10373-8:2011

INTERNATIONAL STANDARD

ISO/IEC 10373-8

First edition
2011-03-15

Identification cards — Test methods —

Part 8: USB-ICC

Cartes d'identification — Méthodes d'essai —

Partie 8: USB-ICC

Reference number
ISO/IEC 10373-8:2011(E)

Documents
Document Sharing Hub
© ISO/IEC 2011

Full document details: BS ISO/IEC 10373-8:2011

PDF disclaimer

This PDF file may contain embedded typefaces. In accordance with Adobe's licensing policy, this file may be printed or viewed but shall not be edited unless the typefaces which are embedded are licensed to and installed on the computer performing the editing. In downloading this file, parties accept therein the responsibility of not infringing Adobe's licensing policy. The ISO Central Secretariat accepts no liability in this area.

Adobe is a trademark of Adobe Systems Incorporated.

Details of the software products used to create this PDF file can be found in the General Info relative to the file; the PDF-creation parameters were optimized for printing. Every care has been taken to ensure that the file is suitable for use by ISO member bodies. In the unlikely event that a problem relating to it is found, please inform the Central Secretariat at the address given below.

COPYRIGHT PROTECTED DOCUMENT

© ISO/IEC 2011

All rights reserved. Unless otherwise specified, no part of this publication may be reproduced or utilized in any form or by any means, electronic or mechanical, including photocopying and microfilm, without permission in writing from either ISO at the address below or ISO's member body in the country of the requester.

ISO copyright office
Case postale 56 • CH-1211 Geneva 20
Tel. + 41 22 749 01 11
Fax + 41 22 749 09 47
E-mail copyright@iso.org
Web www.iso.org

Published in Switzerland

© ISO/IEC 2011 – All rights reserved

Documents
Document Sharing Hub

Full document details: BS ISO/IEC 10373-8:2011

Contents

Page

Foreword v

Introduction vi

1 Scope 1

2 Normative references 1

3 Terms and definitions 1

4 Symbols and abbreviated terms 3

5 Testing USB Physical and Electrical Characteristics 3
5.1 Introduction 3

6 Test Set-Up 4
6.1 Basic Configuration 4
6.2 USB Protocol Analyzer features 5
6.3 Devices under Test 5

7 Test Classification and Validation Criteria 6
7.1 Test Classification 6
7.2 Test types 6
7.3 Test Targets 7
7.4 Test criticality 7
7.5 Test Acceptance and refusal criteria 7

8 USB Protocol Compliance Test Procedure 8
8.1 USB Protocol Tests Groups 8
8.2 Test Description Framework 8
8.2.1 USB signals management Testing 9
8.2.2 Timing management Test 14
8.2.3 Low level protocol and error recovery Testing 15
8.2.4 Cancel and Abandon Tests 19
8.2.5 USB State Machine 20
8.3 Standard Request management Tests 20
8.3.1 Objectives 20
8.3.2 Requirements 20
8.3.3 Initial condition 20
8.3.4 Nominal cases 20
8.3.5 Test List 21
8.3.6 Error cases 22
8.3.7 Common Test Conditions 22
8.3.8 Test List 23

9 Tests for compliance with CCID Class 24
9.1 Objectives 24
9.2 Control A Transfer Individual Request Test 24
9.2.1 Test Description 24
9.2.2 Objectives 24
9.2.3 Requirements 24
9.2.4 Initial USB-ICC condition: 25
9.2.5 Testing Set-Up 25
9.2.6 Test List: Individual Requests in Nominal and with Error Cases 25
9.3 Control A Transfer State Diagram Test 27
9.3.1 Objectives 27
9.3.2 Requirements 27

Documents
Document Sharing Hub

© ISO/IEC 2011 – All rights reserved

Full document details: BS ISO/IEC 10373-8:2011

9.3.3 Initial condition 27
9.3.4 Type of Test 27
9.3.5 Test Description 27
9.3.6 Control transfer version A: Test list 28

Bibliography 33

© ISO/IEC 2011 – All rights reserved

Documents
Document Sharing Hub

Full document details: BS ISO/IEC 10373-8:2011

Foreword

ISO (the International Organization for Standardization) and IEC (the International Electrotechnical Commission) form the specialized system for worldwide standardization. National bodies that are members of ISO or IEC participate in the development of International Standards through technical committees established by the respective organization to deal with particular fields of technical activity. ISO and IEC technical committees collaborate in fields of mutual interest. Other international organizations, governmental and non-governmental, in liaison with ISO and IEC, also take part in the work. In the field of information technology, ISO and IEC have established a joint technical committee, ISO/IEC JTC 1.

International Standards are drafted in accordance with the rules given in the ISO/IEC Directives, Part 2.

The main task of the joint technical committee is to prepare International Standards. Draft International Standards adopted by the joint technical committee are circulated to national bodies for voting. Publication as an International Standard requires approval by at least 75 % of the national bodies casting a vote.

Attention is drawn to the possibility that some of the elements of this document may be the subject of patent rights. ISO and IEC shall not be held responsible for identifying any or all such patent rights.

ISO/IEC 10373-8 was prepared by Joint Technical Committee ISO/IEC JTC 1, *Information technology*, Subcommittee SC 17, *Cards and personal identification*.

ISO/IEC 10373 consists of the following parts, under the general title *Identification cards — Test methods*:

— *Part 1: General characteristics*

— *Part 2: Cards with magnetic stripes*

— *Part 3: Integrated circuit cards with contacts and related interface devices*

— *Part 5: Optical memory cards*

— *Part 6: Proximity cards*

— *Part 7: Vicinity cards*

— *Part 8: USB-ICC*

— *Part 9: Optical memory cards: Holographic recording method*

© ISO/IEC 2011 – All rights reserved

Documents
Document Sharing Hub
Full document details: BS ISO/IEC 10373-8:2011

Introduction

The USB-ICC is a complex device supporting the USB protocol. The layered structure of the USB protocol involves setting the USB-ICC in different testing configurations when a card manufacturer needs to set forth a Validation Plan. In addition, any USB device belongs to a USB Class. Therefore, the comprehensive testing of any USB device involves carefully developing a Test Plan that includes three different groups of Tests:

1) evaluation of the Electrical, Physical features;

2) effective execution of the USB protocol;

3) execution of Tests designed to prove the compliance of the USB device with its specific Class.

These High-Level Groups of Test are made up of a series of individual Test Scenarios. These scenarios challenge the device, and are designed so that any non-compliance of the card could be disclosed. The final objective is to guarantee the compatibility of the USB-ICC with other USB-compliant devices.

Figure 1 summarizes the Validation Test Framework for the USB-ICC that this part of ISO/IEC 10373 suggests for the USB-ICC.

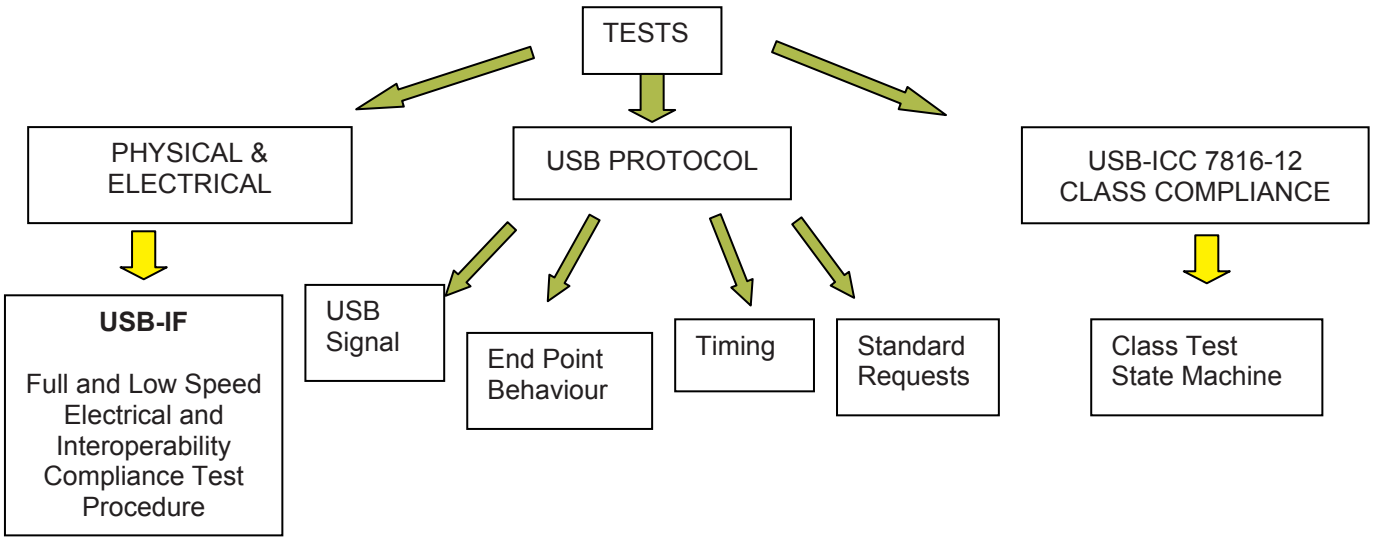

Figure 1 — Compliance test overview

According to ISO/IEC 7816-12, the USB-ICC is required to comply with the USB Specification 2.0 at physical and electrical levels This specification is common to all USB devices; it is published by the USB Implementers Forum, which has also published some Compliance Test Procedures that can be used to test some of the functionalities of the card. Note that ISO/IEC 7816-12 actually describes the USB-ICC Device Class, and testing procedures specific to the USB-ICC Class are not available.

© ISO/IEC 2011 – All rights reserved
Documents
Document Sharing Hub
Full document details: BS ISO/IEC 10373-8:2011

Identification cards — Test methods —

Part 8:
USB-ICC

1 Scope

This part of ISO/IEC 10373 describes a Test Methodology and a list of Test Scenarios to evaluate the compliance of a card with ISO/IEC 7816-12.

Specifically, this part of ISO/IEC 10373:

— addresses USB 2.0 physical layer measurements and electrical compliance testing;

— discusses issues relative to the Test Tools to analyse USB bus traffic and provides guidance for the Test Scenarios given in this part of ISO/IEC 10373;

— proposes a classification of Test Scenarios given in this part of ISO/IEC 10373, along with validation criteria;

— discusses Test Cases for compliance with the USB CCID Class Device.

NOTE Compliance means cards that are called USB-ICC products are designed to match the description in ISO/IEC 7816-12.

2 Normative references

The following referenced documents are indispensable for the application of this document. For dated references, only the edition cited applies. For undated references, the latest edition of the referenced document (including any amendments) applies.

ISO/IEC 7816-12:2005, *Identification cards — Integrated circuit cards — Part 12: Cards with contacts — USB electrical interface and operating procedures* [RE1 in Test Tags in this part of ISO/IEC 10373]

Universal Serial Bus specification – Revision 2.0, 27 April 2000 [RE2 in this part of ISO/IEC 10373]

3 Terms and definitions

3.1
USB Request
Control Transfer Request
transmission unit for the Control Transfer mode, composed of a **Setup Stage** (3.5), an optional **Data Stage** (3.2) and a **Status Stage** (3.6)

NOTE 1 Used in particular for the **enumeration** (3.4) phase.

NOTE 2 The sum of these stages establishes an applicative protocol layer.

NOTE 3 A Request can be either Standard, Class Specific or Vendor Specific.

© ISO/IEC 2011 – All rights reserved

Documents
Document Sharing Hub

Full document details: BS ISO/IEC 10373-8:2011

3.2
Data Stage
part of the Control Transfer that conveys the data associated with a given Request in one or more Data Bus Transactions

3.3
endpoint
communication channel established between a host and a device

NOTE An endpoint is generally mono-directional, except for the Control Transfer mode, where the endpoint is upstream and downstream at the same time.

3.4
enumeration
Standard Procedure for recognition by the host of the USB-ICC for setting up a communication pipe, during which the host attributes a unique address to the device, and the device driver(s) configure(s) the USB-ICC properly

NOTE 1 It starts when a device is plugged onto a USB port.

NOTE 2 It allows one or more suitable device drivers to be attributed to the device.

3.5
Setup Stage
part of a request (see *Request*) containing the request definition

NOTE The Setup Stage contains the target identification of the request, its direction and the length of the next Data Stage.

3.6
Status Stage
part of a request (see *Request*) standing for global acknowledge of the request

NOTE Any request (except the SetAddress request) is supposed to be terminated before the Status Stage is completed.

3.7
transfer
USB transfer
one or more USB transactions

NOTE A transfer is generally mono-directional (downstream – from host to device, or upstream – from device to host), except for the Control Transfer transfers that are always bi-directional.

3.8
USB mode
mode of transfer used by the USB protocol

NOTE The USB protocol uses four different modes of transfer: The Control Transfer (used for enumeration, and certain interfaces), the Interrupt Transfer (simulating a hardware interrupt behaviour using a polling mechanism), the Bulk Transfer (generally used for non-real-time data transfers) and the Isochronous Transfer (used for real-time data transfers).

3.9
USB transaction
sequence of one, two or three phases: Token, Data, Handshake

© ISO/IEC 2011 – All rights reserved
Documents
Document Sharing Hub
Full document details: BS ISO/IEC 10373-8:2011

4 Symbols and abbreviated terms

NA	Not applicable
ACK	Acknowledged
CCID	Integrated Circuit(s) Cards Interface Device conforming to RE5
NAK	Not acknowledged
STALL	Indicates that a transfer is out of context or wrongly formatted. May require a host intervention.

5 Testing USB Physical and Electrical Characteristics

5.1 Introduction

Electrical tests are common to any USB device compliant device. This specification has been published by the USB Implementers Forum. ISO/IEC 10373-3 should refer to this baseline document [RE4].

USB Specification 2.0 defines the following data rates and rise times:

Table 1 — Data rates and rise times

	DATA RATES	RISE TIMES
Low Speed (LS)	1.5 Mbit/s	75ns-300ns
Full Speed (FS)	12 Mbit/s	4ns-20ns
High Speed (HS)	480 Mbit/s	500 ps

USB-ICC manufacturers should build a Validation Test Program based on the USB-IF applicable documentation.

USB 2.0 electrical testing includes:

— Differential signal quality (eye diagram testing, signal rates, EOP width, cross-over voltage range, paired J-K and K-J as well as consecutive jitter and of course rise and fall times);

— In-Rush current check (current drawn by the CUT) when plugged-in;

— Loaded Vbus power line Drop and droop measurements.

For the tests whose compliance guarantees interoperability at electrical level, either the USB-ICC is directly attached to a Host or it is sharing the USB bus with other USB devices.

USB 2.0 specification introduced a 40 times increase in data rates, and therefore a high level of complexity to the chip (Hi-Speed). Specific testing for High-Speed compliant devices include receiver sensitivity, chirp (special signaling during the High-Speed devices speed detection protocol), monotonicity (smooth increase or decrease of Hi-speed signal amplitude without reverse response) and impedance measurements (CUT and cable). The measurement of very short rise times requires use of real-time oscilloscopes with tight requirements for bandwidth, data sample rates and rising and falling times.

The USB connection device shall establish an electrical connection to C1, C5, C4 and C8 only, following the electrical characteristics and protocol given in the USB 2.0 specification.

© ISO/IEC 2011 – All rights reserved

Documents
Document Sharing Hub
Full document details: BS ISO/IEC 10373-8:2011

NOTE 1 Since the publication of ISO/IEC 7816-12, a new relevant USB Specification [RE3] for smart card technology has been released as a supplement to the USB 2.0 Specification. RE3 or Inter-Chip USB specifies the communication between devices operating at different voltage classes (3.0V, 1.8V, 1.5V, 1.2V and 1.0V) using USB Data Transfers. ISO/IEC 7816-12 refers to the USB specification 2.0, requiring the power supply V_{BUS} at 5.0V nominal. However, the configurations and data transfers defined in ISO/IEC 7816-12 may be supported by cards compliant with the Inter-Chip USB. Compliance rules regarding Inter-chip USB products have not been established yet.

NOTE 2 According to ISO/IEC 7816-12, the USB connection device shall establish an electrical connection to C1, C5, C4 and C8 only, following the electrical characteristics and protocol given in the USB 2.0 specification. This document does not address the electrical characteristics of these contacts.

6 Test Set-Up

6.1 Basic Configuration

The Basic test set-up enabling the execution of the Test procedures defined in this section typically is made up of three different devices:

1. **The USB Test Platform**, a Host PC, embedding all the necessary software to drive the USB protocol analyzer.

2. **The USB Protocol Analyzer** configured to capture data transfers between the Host PC and the device under test (e.g., the USB-ICC) and display information about the recorded packets. It executes USB software to generate USB traffic.

3. **The USB-ICC** under test or an USB-ICC chip emulator. The tests detailed can be performed either using a chip emulator, or a USB-ICC, or another development system (bond-out for instance). Refer to Clause 6.3 for additional information.

Figure 2 describes the basic Test Configuration:

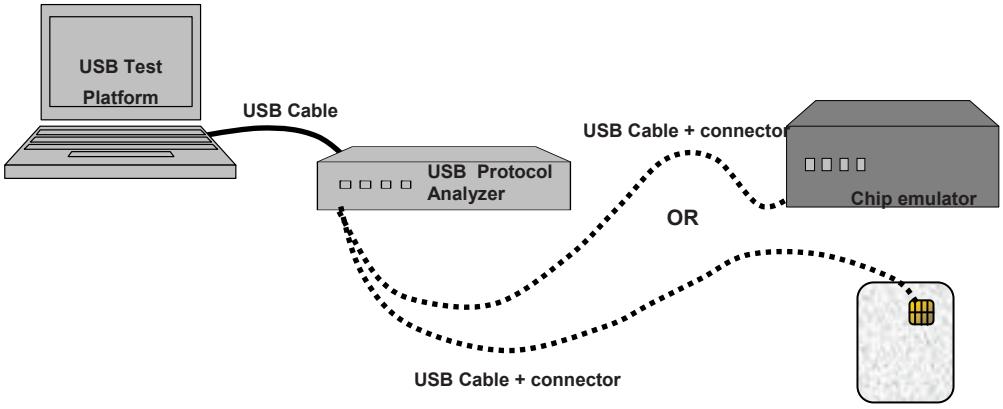

NOTE Other testing configurations are possible.

Figure 2 — Basic test configuration

© ISO/IEC 2011 – All rights reserved
Documents
Document Sharing Hub
Full document details: BS ISO/IEC 10373-8:2011

6.2 USB Protocol Analyzer features

The USB Protocol Analyzer is configured and controlled by the USB Test Platform to which it is connected through a USB port.

The USB Test Platform configures the USB Protocol Analyzer Unit in traffic generation mode.

Commercial USB Protocol Analyzers usually support enhancements like a *USB Data Transfer.* Within USB, at the lowest level analysis view (packet level) individual packets are representative of the mode of communication taking place. The second higher-level view (Bus Transaction level) combines packets into USB-ICC Bus transactions (Control, Bulk, Interrupt IN), where the actual functional interaction between the Host and the USB-ICC takes place. The highest level view (transfer level) is defined by the device class definitions (CCID class for the USB-ICC).

USB Data Transfer level decoding allows to displays bus interactions between USB devices being tested/analyzed at a level that is more illustrative of the functions being performed

The USB Protocol Analyzer usually includes provisions for on-the-fly detection of, and triggering on, numerous events. Such events include specific user-defined bus conditions, packets matching any Packet Identifier (PID), packets matching a Token or Setup transaction, data patterns, and many abnormal (error) bus conditions locate specific data, errors and other desired conditions.

Such pre-selected triggered events may then be recorded and displayed on the USB Test Platform. Real-time detection of events can also be individually enabled or disabled to allow triggering on events as they happen. This includes predefined exception or error conditions, and a user-defined set of search conditions.

6.3 Devices under Test

It is recommended that tests defined in Clauses 8 and 9 be completed using at least two different test platforms:

a) The first one is composed of an emulator of the chip under test; and a card reader interface board configured for USB communication. A PC using the serial port may be used to drive this emulator. The card reader interface board (USB type) can be plugged into the USB Protocol Analyzer record port with a USB connector as shown in Figure 3.

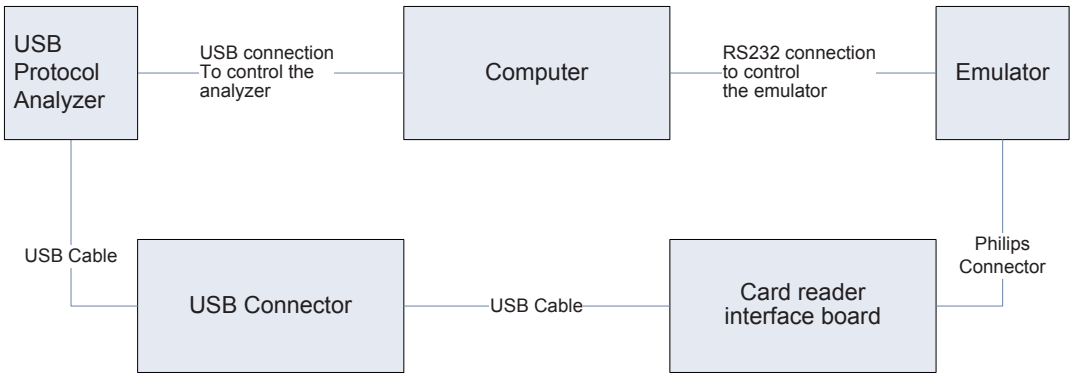

Figure 3 — Test platform 1

© ISO/IEC 2011 – All rights reserved

Documents
Document Sharing Hub
Full document details: BS ISO/IEC 10373-8:2011

b) The second test configuration is made up of a sample smartcard (built with the final component) with a USB connector, plugged into the USB Protocol Analyzer record port with a USB connector as shown in Figure 4.

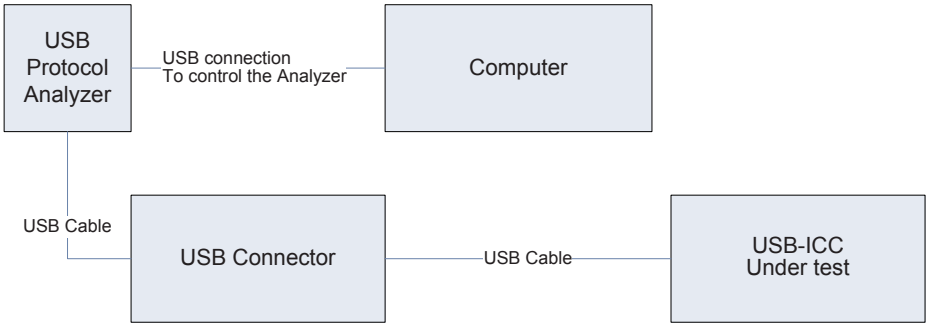

Figure 4 — Test platform 2

7 Test Classification and Validation Criteria

This chapter proposes a classification of the Test Scenarios detailed in Clause 8.

7.1 Test Classification

Each Test Scenario described in Clause 8 is characterized by Type, Target and Criticality as follows:

— **Test Type**: Negative (N) or Nominal (P) , according to the criteria defined in 7.2;

— **Test Target**: Core Feature (C), Prototype (P), Contextual Dependency (D), Security (S) and Side Effect (E) according to the criteria defined in 7.3;

— **Test Criticality**: Critical (C), Major (M) or Minor (m) according to the criteria defined in 7.4.

7.2 Test types

The Test Type refers to the context in which the test is performed compared to the real life conditions. Three types of tests are set out in this section:

— **Negative tests (N):** These tests challenge the ability of the USB-ICC not to run out of control, or to reach an undesired state when accidentally facing a non-standard case. Examples include peer defects, non-compliant USB Hosts devices or drivers. Negative Tests in Clause 8 are tagged with label *N*;

— **Nominal positive tests (P):** They ensure that the card performs properly according to ISO/IEC 7816-12. Positive tests in Clause 8 are tagged with label *P.*

Again, in relation with the Nominal Positive Case tests, two types of tests can be differentiated:

— **Nominal Case Testing:** The Host executes nominal USB Transfers according to USB 2.0 and expects the USB-ICC to respond in an appropriate way;

— **Error Case Testing:** The Host introduces deliberately a given USB Protocol Error in the USB transaction, and expects error detection by the USB-ICC. For instance, a Data Packet error for an OUT Transaction is expected to result in an irresponsive card and the corresponding Host Time-Out (the card doesn't handshake) resulting in a RETRY initiated by the Host.

© ISO/IEC 2011 – All rights reserved
Documents
Document Sharing Hub
Full document details: BS ISO/IEC 10373-8:2011