BS ISO/IEC 11801-5:2017
Incorporating corrigendum April 2018

BSI Standards Publication

Information technology – Generic cabling for customer premises

Part 5: Data centres

Documents
Document Sharing Hub

Full document details: BS ISO/IEC 11801-5:2017

National foreword

This British Standard is the UK implementation of ISO/IEC 11801-5:2017, incorporating corrigendum April 2018.

The start and finish of text introduced or altered by corrigendum is indicated in the text by tags. Text altered by ISO/IEC corrigendum April 2018 is indicated in the text by ▌AC1⟩ ⟨AC1▐.

The UK participation in its preparation was entrusted to Technical Committee TCT/7, Telecommunications - Installation requirements.

A list of organizations represented on this committee can be obtained on request to its secretary.

This publication does not purport to include all the necessary provisions of a contract. Users are responsible for its correct application.

© The British Standards Institution 2018
Published by BSI Standards Limited 2018

ISBN 978 0 539 00689 6

ICS 35.200

Compliance with a British Standard cannot confer immunity from legal obligations.

This British Standard was published under the authority of the Standards Policy and Strategy Committee on 31 December 2017.

Amendments/corrigenda issued since publication

Date	Text affected
31 May 2018	Implementation of ISO/IEC corrigendum April 2018

Documents
Document Sharing Hub

Full document details: BS ISO/IEC 11801-5:2017

ISO/IEC 11801-5

Edition 1.0 2017-11

INTERNATIONAL STANDARD

Information technology – Generic cabling for customer premises – Part 5: Data centres

INTERNATIONAL
ELECTROTECHNICAL
COMMISSION

ICS 35.200

ISBN 978-2-8322-5043-3

Warning! Make sure that you obtained this publication from an authorized distributor.

Documents
Document Sharing Hub

Full document details: BS ISO/IEC 11801-5:2017

CONTENTS

FOREWORD 6
INTRODUCTION 8
1 Scope 10
2 Normative references 10
3 Terms, definitions and abbreviated terms 11
3.1 Terms and definitions 11
3.2 Abbreviated terms 13
4 Conformance 13
5 Structure of the generic cabling system 14
5.1 General 14
5.2 Functional elements 14
5.3 General structure and hierarchy 14
5.4 Cabling subsystems 15
5.4.1 General 15
5.4.2 Network access cabling subsystem 16
5.4.3 Main distribution cabling subsystem 16
5.4.4 Intermediate distribution cabling subsystem 16
5.4.5 Zone distribution cabling subsystem 16
5.4.6 Design objectives 17
5.5 Accommodation of functional elements 17
5.6 Interfaces 17
5.6.1 Equipment interfaces and test interfaces 17
5.6.2 Channels and links 18
5.7 Dimensioning and configuring 19
5.7.1 Distributors 19
5.7.2 Redundancy 20
5.7.3 External network interface 21
5.7.4 Cables 22
5.7.5 Equipment cords 22
5.7.6 Patch cords and jumpers 22
5.7.7 Equipment outlets 22
5.7.8 LDP 23
5.7.9 Building entrance facilities 23
5.8 Earthing and equipotential bonding 23
6 Channel performance requirements 23
6.1 General 23
6.2 Environmental performance 25
6.3 Transmission performance 25
6.3.1 General 25
6.3.2 Balanced cabling 25
6.3.3 Optical fibre cabling 25
7 Link performance requirements 26
7.1 General 26
7.2 Balanced cabling 26
7.3 Optical fibre cabling 26

AVA Documents
Document Sharing Hub

Full document details: BS ISO/IEC 11801-5:2017

8 Reference implementations 26
8.1 General 26
8.2 Balanced cabling 26
8.2.1 Assumptions 26
8.2.2 Zone distribution cabling 27
8.2.3 Cabling between distributors 30
8.2.4 Network access cabling 33
8.3 Optical fibre cabling 35
8.3.1 General 35
8.3.2 Component choice 35
8.3.3 Dimensions 36
9 Cable requirements 36
9.1 General 36
9.2 Balanced cables 36
9.3 Optical fibre cables 36
10 Connecting hardware requirements 36
10.1 General requirements 36
10.1.1 Overview 36
10.1.2 Location 36
10.1.3 Design 37
10.1.4 Operating environment 37
10.1.5 Mounting 37
10.1.6 Installation practices 37
10.1.7 Marking and colour coding 37
10.2 Connecting hardware for balanced cabling 37
10.2.1 General requirements 37
10.2.2 Performance marking 37
10.2.3 Mechanical characteristics 37
10.3 Connecting hardware for optical fibre cabling 38
10.3.1 General requirements 38
10.3.2 ENI requirements 38
10.3.3 EO requirements 38
10.3.4 Optical fibre assignments at the EO 39
10.3.5 Connecting hardware at other locations 39
11 Requirements for cords and jumpers 39
11.1 Jumpers 39
11.2 Balanced cords 39
11.3 Optical fibre cords 39
Annex A (normative) Combination of balanced cabling links 40
A.1 General 40
A.2 Requirements 40
Annex B (informative) Usage of high density connecting hardware within optical fibre cabling 41
B.1 General 41
B.2 Use cases for high density connecting hardware 41
Annex C (informative) Examples of structures in accordance with ISO/IEC 11801-5 45
C.1 General 45
C.2 Data centre minimum configuration 46

AVA Documents
Document Sharing Hub

Full document details: BS ISO/IEC 11801-5:2017

C.3 End of Row concept 47
C.4 Middle of Row concept 48
C.5 Top of Rack concept 49
C.6 End of Row and Middle of Row concept with redundancy 50
C.7 Top of Rack concept with redundancy 51
C.8 End of Row concept with full redundancy 52
C.9 Top of Rack concept with redundancy 53
Annex D (informative) Examples of networking architectures 54
D.1 General 54
D.2 Data centre fabric fat-tree 54
D.3 Data centre fabric full-mesh 55
D.4 Data centre fabric interconnected meshes 55
D.5 Data centre fabric centralized switch 56
D.6 Data centre fabric virtual switch 57
Bibliography 58

Figure 1 – Relationships between the generic cabling documents produced by ISO/IEC JTC 1/SC 25 8
Figure 2 – Structure of generic cabling within a data centre 15
Figure 3 – Hierarchical structure of generic cabling within a data centre 15
Figure 4 – Example of accommodation of functional elements 17
Figure 5 – Test and equipment interfaces 19
Figure 6 – Connection of functional elements providing redundancy 21
Figure 7 – Examples of external service cabling connections to the ENI 22
Figure 8 – Example of a channel with four connections 24
Figure 9 – Example of a system showing the location of cabling interfaces 25
Figure 10 – Zone distribution cabling models 28
Figure 11 – Cabling model between distributors using Class E_A to F_A 31
Figure 12 – Cabling model between distributors using Class I and II 31
Figure 13 – Network access cabling models 34
Figure A.1 – Examples of combination of different links 40
Figure B.1 – Examples of high density connecting hardware within main distribution cabling and intermediate distribution cabling 42
Figure B.2 – Examples of high density connecting hardware at the LDP and EO within zone distribution cabling 44
Figure C.1 – Key for Figures C.2 through C.9 45
Figure C.2 – Example of a minimum configuration 46
Figure C.3 – Example of End of Row configuration 47
Figure C.4 – Example of Middle of Row configuration 48
Figure C.5 – Example of Top of Rack configuration 49
Figure C.6 – Example of End of Row configuration with redundancy 50
Figure C.7 – Example of Top of Rack configuration with redundancy 51
Figure C.8 – Example of End of Row configuration with full redundancy 52
Figure C.9 – Example of Top of Rack configuration with full redundancy 53
Figure D.1 – Fat-tree example 54
Figure D.2 – Full-mesh example 55

AVA Documents
Document Sharing Hub

Full document details: BS ISO/IEC 11801-5:2017

Figure D.3 – Interconnected mesh example 56
Figure D.4 – Centralized switch example 56
Figure D.5 – Virtual switch example 57

Table 1 – Zone distribution cabling – length assumptions for balanced cabling using Classes E_A to F_A 29
Table 2 – Zone distribution cabling – length assumptions for balanced cabling using Classes I and II 30
Table 3 – Zone distribution channel length equations for Classes 30
Table 4 – Cabling between distributors – length assumptions for balanced cabling using Classes E_A to F_A 31
Table 5 – Cabling between distributors – length assumptions for balanced cabling using Classes I and II 32
Table 6 – Length equations for cabling between distributors 32
Table 7 – Network access cabling channel equations 35
Table 8 – Connecting hardware of the type used at the EO 37

Documents
Document Sharing Hub

Full document details: BS ISO/IEC 11801-5:2017

INFORMATION TECHNOLOGY – GENERIC CABLING FOR CUSTOMER PREMISES –

Part 5: Data centres

FOREWORD

1) ISO (the International Organization for Standardization) and IEC (the International Electrotechnical Commission) form the specialized system for worldwide standardization. National bodies that are members of ISO or IEC participate in the development of International Standards through technical committees established by the respective organization to deal with particular fields of technical activity. ISO and IEC technical committees collaborate in fields of mutual interest. Other international organizations, governmental and non-governmental, in liaison with ISO and IEC, also take part in the work. In the field of information technology, ISO and IEC have established a joint technical committee, ISO/IEC JTC 1.

2) The formal decisions or agreements of IEC and ISO on technical matters express, as nearly as possible, an international consensus of opinion on the relevant subjects since each technical committee has representation from all interested IEC National Committees and ISO member bodies.

3) IEC, ISO and ISO/IEC publications have the form of recommendations for international use and are accepted by IEC National Committees and ISO member bodies in that sense. While all reasonable efforts are made to ensure that the technical content of IEC, ISO and ISO/IEC publications is accurate, IEC or ISO cannot be held responsible for the way in which they are used or for any misinterpretation by any end user.

4) In order to promote international uniformity, IEC National Committees and ISO member bodies undertake to apply IEC, ISO and ISO/IEC publications transparently to the maximum extent possible in their national and regional publications. Any divergence between any ISO, IEC or ISO/IEC publication and the corresponding national or regional publication should be clearly indicated in the latter.

5) ISO and IEC do not provide any attestation of conformity. Independent certification bodies provide conformity assessment services and, in some areas, access to IEC marks of conformity. ISO or IEC are not responsible for any services carried out by independent certification bodies.

6) All users should ensure that they have the latest edition of this publication.

7) No liability shall attach to IEC or ISO or its directors, employees, servants or agents including individual experts and members of their technical committees and IEC National Committees or ISO member bodies for any personal injury, property damage or other damage of any nature whatsoever, whether direct or indirect, or for costs (including legal fees) and expenses arising out of the publication of, use of, or reliance upon, this ISO/IEC publication or any other IEC, ISO or ISO/IEC publications.

8) Attention is drawn to the normative references cited in this publication. Use of the referenced publications is indispensable for the correct application of this publication.

9) Attention is drawn to the possibility that some of the elements of this ISO/IEC publication may be the subject of patent rights. ISO and IEC shall not be held responsible for identifying any or all such patent rights.

International Standard ISO/IEC 11801-5 was prepared by subcommittee 25: Interconnection of information technology equipment, of ISO/IEC joint technical committee 1: Information technology.

This first edition cancels and replaces ISO/IEC 24764:2010 and Amendment 1:2014. This edition constitutes a technical revision.

This edition includes the following significant technical changes with respect to the previous edition:

a) standard re-structured to contain only those requirements that are specific for generic cabling systems installed in data centres;

b) addition of balanced cabling channels Class I and Class II;

c) addition of examples of structures in accordance with ISO/IEC 11801-5 in Annex C;

d) addition of examples of networking architectures in Annex D.

ISO/IEC 11801-5 is to be read in conjunction with ISO/IEC 11801-1.

Documents
Document Sharing Hub

Full document details: BS ISO/IEC 11801-5:2017

This International Standard has been approved by vote of the member bodies, and the voting results can be obtained from the address given on the second title page.

This document has been drafted in accordance with the ISO/IEC Directives, Part 2.

A list of all parts in the ISO/IEC 11801 series, published under the general title *Information technology – Generic cabling for customer premises*, can be found on the IEC website.

The contents of the corrigendum of April 2018 have been included in this copy.

Documents
Document Sharing Hub

Full document details: BS ISO/IEC 11801-5:2017

INTRODUCTION

The importance of cabling infrastructure is similar to that of other fundamental utilities such as water and energy supply and interruptions to the services provided over that infrastructure can have a serious impact. A lack of design foresight, the use of inappropriate components, incorrect installation, poor administration or inadequate support can threaten quality of service and have commercial consequence for all types of users.

This document specifies generic cabling within and to the computer room spaces of data centre premises, or computer room spaces within other types of building.

Additionally those premises can include

- office spaces for which generic cabling is specified in ISO/IEC 11801-2,
- industrial spaces for which generic cabling is specified in ISO/IEC 11801-3.

Generic cabling for distributed building services in data centre spaces is specified in ISO/IEC 11801-6, which addresses all of the above premises and spaces within them.

Figure 1 shows the schematic and contextual relationships between the standards relating to information technology cabling produced by ISO/IEC JTC 1/SC 25, namely the ISO/IEC 11801 series of standards for generic cabling design, standards for the installation, operation and administration of generic cabling and for testing of installed generic cabling.

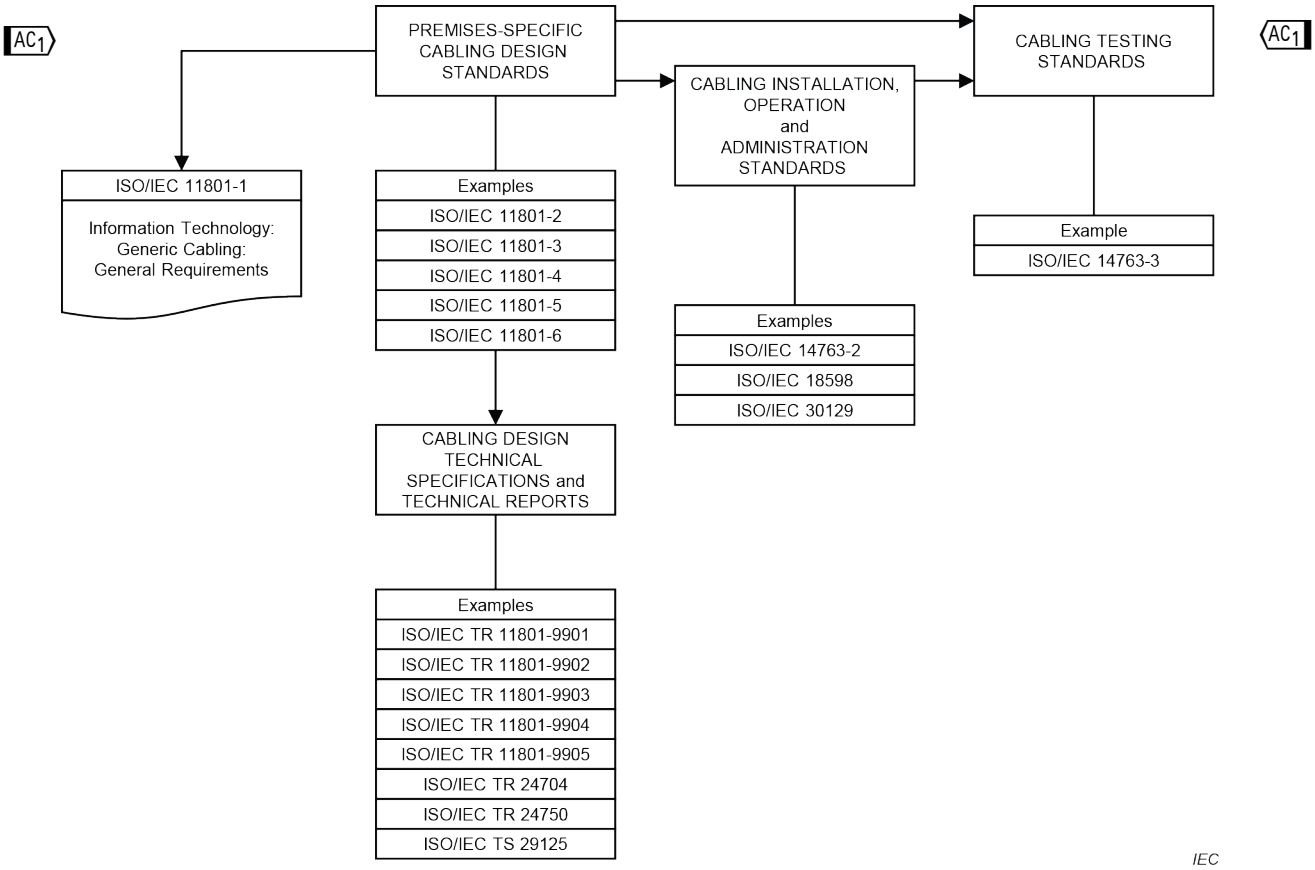

Figure 1 – Relationships between the generic cabling documents produced by ISO/IEC JTC 1/SC 25

Documents
Document Sharing Hub
Full document details: BS ISO/IEC 11801-5:2017

The generic cabling specified by this document provides users with

a) an application independent system capable of supporting a wide range of applications in a range of installation and operating environments,

b) a flexible scheme such that modifications are both easy and economical,

c) a multi-vendor supply chain within an open market for cabling components.

In addition, this document provides

d) relevant industry professionals with guidance allowing the accommodation of cabling before specific requirements are known, i.e. in the initial planning either for construction or refurbishment and for further deployment as the requirements of areas are defined,

e) industry and standardization bodies with a cabling system which supports current products and provides a basis for future product development and applications standardization.

Applications addressed in this document include those developed by the technical committees of IEC (including the subcommittees of ISO/IEC JTC 1) and study groups of ITU-T as used to support high data rate, mission-critical services within the densely connected environment of data centre spaces.

This document has taken into account requirements specified in application standards listed in Annex E of ISO/IEC 11801-1:2017.

This document should be read in conjunction with ISO/IEC 11801-1, which was created to consolidate general requirements for generic cabling into a single standard which allows the other standards in the ISO/IEC 11801 series to have a common reference.

Physical layer requirements for the applications listed in Annex E of ISO/IEC 11801-1:2017 have been analysed to determine their compatibility with the cabling performance specified in this document and, together with statistics concerning premises geography from different countries and the models described in Clause 6, have been used to develop the requirements for cabling components and to stipulate their arrangement into cabling systems.

As a result, this International Standard specifies a structure for generic cabling supporting a wide variety of applications, which

1) adopts balanced cabling channel and link Classes E_A, F, F_A, I and II specified in ISO/IEC 11801-1,

2) adopts component requirements, specified in ISO/IEC 11801-1, and specifies cabling implementations that ensure performance of permanent links and of channels that meet or exceed the requirements of a specified group (e.g. Class) of applications,

3) adopts optical fibre cabling channel and link requirements specified in ISO/IEC 11801-1.

Life expectancy of generic cabling systems can vary depending on environmental conditions, supported applications, aging of materials used in cables, and other factors such as access to pathways (campus pathways are more difficult to access than building pathways). With appropriate choice of components, generic cabling systems meeting the requirements of this document are expected to have a life expectancy of at least ten years

This document has taken into account requirements specified in application standards listed in ISO/IEC 11801-1:2017, Annex E. It refers to International Standards for components and test methods whenever appropriate International Standards are available.

Documents
Document Sharing Hub

Full document details: BS ISO/IEC 11801-5:2017

INFORMATION TECHNOLOGY – GENERIC CABLING FOR CUSTOMER PREMISES –

Part 5: Data centres

1 Scope

This part of ISO/IEC 11801 specifies generic cabling within and to the computer room spaces of data centre premises, or data centre spaces within other types of buildings. It covers balanced cabling and optical fibre cabling.

This document is optimized for premises in which the maximum distance over which telecommunications services can be distributed is 2 000 m. The principles of this document can also be applied to larger installations.

Cabling specified by this document supports a wide range of services including voice, data and video that can also incorporate the supply of power.

This document specifies directly or via reference to ISO/IEC 11801-1

a) the structure and minimum configurations for generic cabling within data centres,

b) the interfaces at the equipment outlet (EO) and the external network interface (ENI),

c) the performance requirements for cabling links and channels,

d) the implementation requirements and options,

e) the performance requirements for cabling components,

f) the conformance requirements and verification procedures.

Safety (e.g. electrical safety and protection, fire) and electromagnetic compatibility (EMC) requirements are outside the scope of this document, and are covered by other standards and by regulations. However, information given by this document can be of assistance.

2 Normative references

The following documents are referred to in the text in such a way that some or all of their content constitutes requirements of this document. For dated references, only the edition cited applies. For undated references, the latest edition of the referenced document (including any amendments) applies.

IEC 60603-7-7, *Connectors for electronic equipment – Part 7-7: Detail specification for 8-way, shielded, free and fixed connectors for data transmissions with frequencies up to 600 MHz*

IEC 60603-7-41, *Connectors for electronic equipment – Part 7-41: Detail specification for 8-way, unshielded, free and fixed connectors, for data transmissions with frequencies up to 500 MHz*

IEC 60603-7-51, *Connectors for electronic equipment – Part 7-51: Detail specification for 8-way, shielded, free and fixed connectors, for data transmissions with frequencies up to 500 MHz*

IEC 60603-7-71, *Connectors for electronic equipment – Part 7-71: Detail specification for 8-way, shielded, free and fixed connectors, for data transmission with frequencies up to 1 000 MHz*

AVA Documents
Document Sharing Hub

Full document details: BS ISO/IEC 11801-5:2017

IEC 60603-7-81, *Connectors for electronic equipment – Part 7-81: Detail specification for 8-way, shielded, free and fixed connectors, for data transmissions with frequencies up to 2 000 MHz*

IEC 60603-7-82, *Connectors for electronic equipment – Part 7-82: Detail specification for 8-way, 12 contacts, shielded, free and fixed connectors, for data transmissions with frequencies up to 2 000 MHz*

AC1 *Text deleted* AC1

IEC 61754-7-1, *Fibre optic interconnecting devices and passive components – Fibre optic connector interfaces – Part 7-1: Type MPO connector family – One fibre row*

IEC 61754-7-2, *Fibre optic interconnecting devices and passive components – Fibre optic connector interfaces – Part 7-2: Type MPO connector family – Two fibre rows*

IEC 61754-20, *Fibre optic connector interfaces – Part 20: Type LC connector family*

IEC 61755-3-2, *Fibre optic connector optical interfaces – Part 3-2: Optical interface, 2,5 mm and 1,25 mm diameter cylindrical full zirconia ferrules for 8 degrees angled-PC single mode fibres*

ISO/IEC 11801-1:2017, *Information technology – Generic cabling for customer premises – Part 1: General requirements*

ISO/IEC 14763-2, *Information technology – Implementation and operation of customer premises cabling – Part 2: Planning and installation*

ISO/IEC 30129, *Information technology – Telecommunications bonding networks for buildings and other structures*

3 Terms, definitions and abbreviated terms

3.1 Terms and definitions

For the purposes of this document, the terms and definitions given in ISO/IEC 11801-1 and the following apply.

ISO and IEC maintain terminological databases for use in standardization at the following addresses:

- IEC Electropedia: available at http://www.electropedia.org/
- ISO Online browsing platform: available at http://www.iso.org/obp

3.1.1
computer room
one or more spaces primarily dedicated to housing cabling and equipment used for electronics data storage, processing and networking

3.1.2
computer room space
area within the data centre that accommodates the data processing, data storage and telecommunications equipment that provides the primary function of the data centre

3.1.3
equipment outlet
fixed connecting device for terminating the zone distribution cabling and providing the interface to the equipment cord

AVA Documents Document Sharing Hub

Full document details: BS ISO/IEC 11801-5:2017

3.1.4
fixed zone distribution cable
cable connecting the zone distributor to either the equipment outlet or, if present, the local distribution point

3.1.5
intermediate distribution cable
cable connecting the intermediate distributor to the zone distributor

3.1.6
intermediate distributor
distributor used to make connections between the main distribution cabling subsystem, intermediate distribution cabling subsystem, network access cabling subsystem and cabling subsystems specified in ISO/IEC 11801-1 and active equipment

3.1.7
local distribution point
connection point in the zone distribution cabling subsystem between a zone distributor and an equipment outlet

3.1.8
local distribution point cable
cable connecting a local distribution point to an equipment outlet

3.1.9
local distribution point link
transmission path between a local distribution point and the interface at the other end of the fixed zone distribution cable including the connecting hardware at each end

3.1.10
main distribution cable
cable connecting the main distributor to the intermediate distributor or the zone distributor

3.1.11
main distributor
distributor used to make connections between the main distribution cabling subsystem, network access cabling subsystem and cabling subsystems as specified in ISO/IEC 11801-1 and active equipment

3.1.12
network access cable
cable connecting the external network interface (or other distributors of the ISO/IEC 11801 series) to the main distributor, intermediate distributor or zone distributor

3.1.13
transition assembly
assembly of cabled optical fibres and connectors, with an MPO connector on one end and simplex or duplex connectors on the other end

3.1.14
zone distribution cable
cable connecting the zone distributor to the equipment outlet(s) or local distribution point(s), where present

3.1.15
zone distributor
distributor used to make connections between the main distribution cabling subsystem, intermediate distribution cabling subsystem, zone distribution cabling subsystem, network

AVA Documents
Document Sharing Hub

Full document details: BS ISO/IEC 11801-5:2017

access cabling subsystem, cabling subsystems specified in ISO/IEC 11801-1 and active equipment

3.2 Abbreviated terms

For the purposes of this document, the abbreviated terms given in ISO/IEC 11801-1 and the following apply.

CuC copper cabling

ENI external network interface

AC1 *Text deleted* AC1

ID intermediate distributor

LDP local distribution point

MD main distributor

OFC optical fibre cabling

SAN storage area network

ZD zone distributor

4 Conformance

For a cabling installation to conform to this document the following applies.

a) The configuration and structure shall conform to the requirements outlined in Clause 5.

b) Channels shall meet the requirements specified in Clause 6 when subjected to environment conditions, local to the channels (see NOTE below), as defined by the applicable environmental Class(es) of Clause 6.
This shall be achieved by one of the following:
   1) a channel design and implementation ensuring that the prescribed channel performance of Clause 6 is met;
   2) attachment of appropriate components to a permanent link or CP link design meeting the prescribed performance class of Clause 7. Channel performance shall be ensured where a channel is created by adding more than one cord to either end of a link meeting the requirements of Clause 7;
   3) for E1 environments, using the reference implementations of Clause 8 and compatible cabling components conforming to the requirements of Clauses 9, 10, and 11, that is based upon a statistical approach of performance modelling.

c) The interfaces to the cabling at the EO shall conform to the requirements of Clause 10 with respect to mating interfaces and performance when subjected to environment conditions, local to the connecting hardware (see NOTE below), as defined by the applicable environmental Class(es) of Clause 6.

d) Connecting hardware at other places in the cabling structure shall meet the performance requirements specified in Clause 10 when subjected to environment conditions, local to the connecting hardware (see NOTE below), as defined by the applicable environmental Class(es) of Clause 6.

e) The requirements of ISO/IEC 14763-2 and ISO/IEC 30129 shall be met.

This document does not specify which tests and sampling levels should be adopted. Test methods to assess conformance with the channel and link requirements of Clause 6 and Clause 7, respectively, are specified in ISO/IEC 11801-1. The test parameters to be measured, the sampling levels and the treatment of measured results to be applied for particular installation shall be defined in the installation specification and quality plan for that installation prepared in accordance with ISO/IEC 14763-2.

In the absence of the channel, the conformance of the link shall be used to verify conformance with ISO/IEC 11801-5.

AVA Documents
Document Sharing Hub

Full document details: BS ISO/IEC 11801-5:2017

Specifications marked "ffs" are preliminary specifications, and are not required for conformance to this document.

NOTE The applicable environmental classification of ISO/IEC 11801-1:2017, 6.2.2, local to the cabling or cabling component(s), is that of the environment immediately adjacent to the cabling or cabling component(s).

5 Structure of the generic cabling system

5.1 General

Clause 5 identifies the functional elements of generic cabling for data centres, describes how they are connected together to form subsystems and identifies the interfaces at which application-specific components are connected to the generic cabling. Examples of structures in accordance with Clause 5 can be found in Annex C.

Applications listed in ISO/IEC 11801-1:2017, Annex E are supported by connecting active equipment at the external network interfaces, equipment outlets and the distributors.

Examples of network architectures in accordance with Clause 5 can be found in Annex D.

5.2 Functional elements

The functional elements of generic cabling are as follows:

a) external network interface (ENI) – not defined in ISO/IEC 11801-1;

b) network access cable – not defined in ISO/IEC 11801-1;

c) main distributor (MD) – equivalent to distributor 3 in ISO/IEC 11801-1;

d) main distribution cable – equivalent to subsystem cable 3 in ISO/IEC 11801-1;

e) intermediate distributor (ID) – equivalent to distributor 2 in ISO/IEC 11801-1;

f) intermediate distribution cable – equivalent to subsystem cable 2 in ISO/IEC 11801-1;

g) zone distributor (ZD) – equivalent to distributor 1 in ISO/IEC 11801-1;

h) zone distribution cable – equivalent to subsystem cable 1 in ISO/IEC 11801-1;

i) local distribution point (LDP) – equivalent to consolidation point in ISO/IEC 11801-1;

j) local distribution point cable (LDP cable) – equivalent to cable Y in ISO/IEC 11801-1;

k) equipment outlet (EO) – equivalent to TE outlet in ISO/IEC 11801-1.

Groups of these functional elements are connected together to form cabling subsystems to provide the required applications to the telecommunications equipment and terminal equipment.

5.3 General structure and hierarchy

Generic cabling systems in data centres contain up to four cabling subsystems: network access cabling, main distribution cabling, intermediate distribution cabling and zone distribution cabling. Where present within the premises, distributors of other parts of the ISO/IEC 11801 series are connected to the generic cabling within the data centre using the network access cabling.

The cabling subsystems are connected together to create a generic cabling system with a structure as shown in Figure 2. The composition of the cabling subsystems is described in 5.4.2, 5.4.3, 5.4.4 and 5.4.5. The functional elements of the cabling subsystems are interconnected to form a hierarchical star topology as shown in Figure 3.

The functions of multiple distributors can be combined, see 5.7.1.

Documents
Document Sharing Hub

Full document details: BS ISO/IEC 11801-5:2017

Connections between cabling subsystems are either indirect, requiring application-specific equipment, or direct. Connection to application-specific equipment at an MD, ID or a ZD adopts either an interconnect or a cross-connect approach (see ISO/IEC 11801-1). Connection to application-specific equipment at an ENI and EO adopts an interconnect approach (see ISO/IEC 11801-1). Direct connections between cabling subsystems adopt either a cross-connect approach, by way of either patch cords or jumpers, or an interconnect approach.

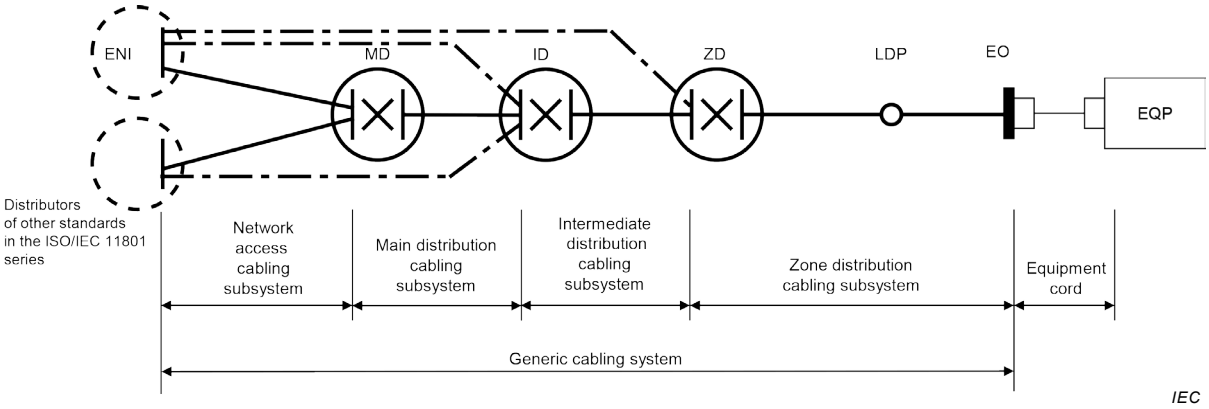

Figure 2 – Structure of generic cabling within a data centre

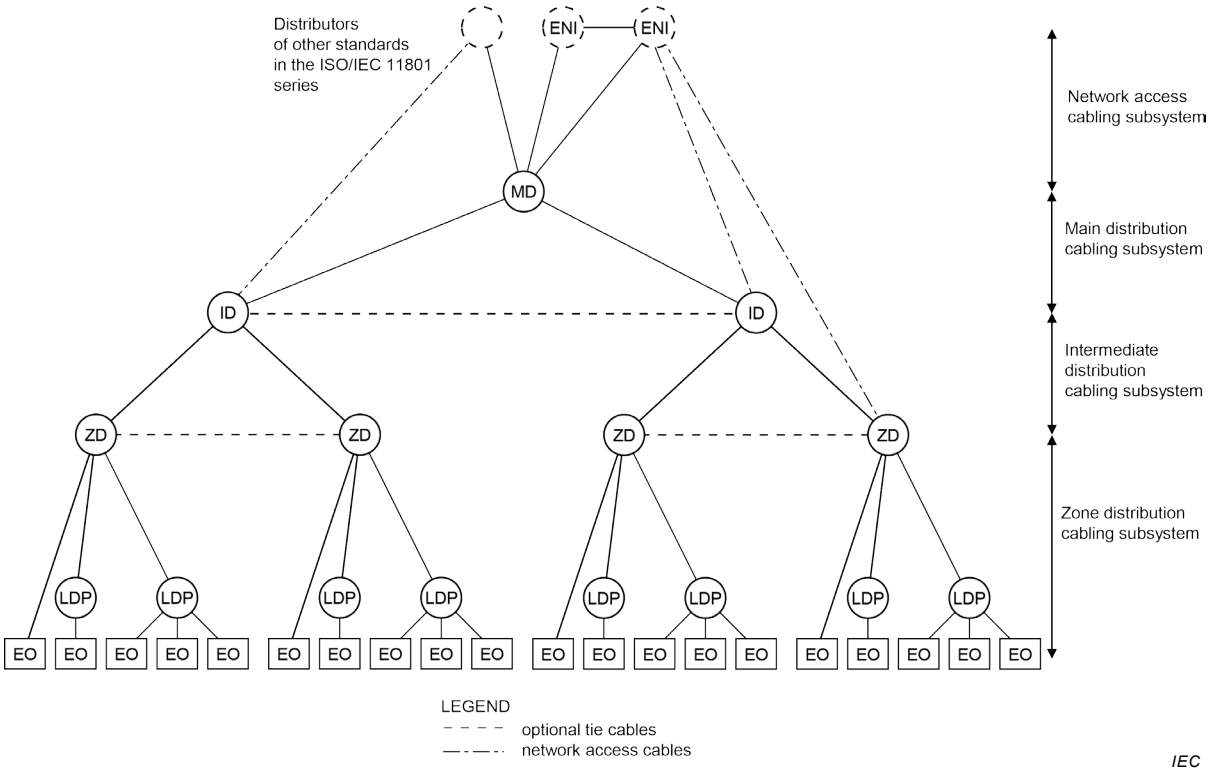

NOTE Network access cabling is also used to connect ENI to ID or ZD.

Figure 3 – Hierarchical structure of generic cabling within a data centre

5.4 Cabling subsystems

5.4.1 General

Although work area cords (equivalent to the TE cords of ISO/IEC 11801-1) and equipment cords are used to connect terminal and transmission equipment, respectively, to the cabling

AVA Documents Document Sharing Hub

subsystem, they are not considered part of the cabling subsystem because they can be application specific.

The optional redundancy between distributors as shown in Figure 3 shall be provided by the use of tie cabling.

Tie cabling is not considered as a part of the hierarchical structure within this document. If provided, it shall include

a) the tie cable,

b) the mechanical termination of the tie cable at the peer distributors.

5.4.2 Network access cabling subsystem

The network access cabling subsystem extends from an MD (or ID, or ZD) to the ENIs or to the ISO/IEC 11801 series distributors (see Figure 2).

The subsystem includes

a) the network access cables,

b) the mechanical termination of the network access cables at the ENI(s),

c) the mechanical termination of the network access cables at the MD, ID(s), ZD(s) or other distributors in accordance with ISO/IEC 11801-1.

5.4.3 Main distribution cabling subsystem

The main distribution cabling subsystem extends from an MD to the ID(s) (or ZD(s)) connected to it. The subsystem includes

a) the main distribution cables,

b) the mechanical termination of the main distribution cables at the MD together with associated patch cords and/or jumpers at the MD,

c) the mechanical termination of the main distribution cables at the ID(s) or ZD(s).

5.4.4 Intermediate distribution cabling subsystem

The intermediate distribution cabling subsystem extends from an ID to the ZD(s) connected to it.

The subsystem includes

a) the intermediate distribution cables,

b) the mechanical termination of the intermediate distribution cables at the ID together with associated patch cords and/or jumpers at the ID,

c) the mechanical termination of the intermediate distribution cables at the ZD(s).

5.4.5 Zone distribution cabling subsystem

The zone distribution cabling subsystem extends from a ZD to the EO(s) connected to it. The subsystem includes

Documents
Document Sharing Hub

Full document details: BS ISO/IEC 11801-5:2017

a) the zone distribution cables,

b) the mechanical termination of the zone distribution cables at the EO(s) and the ZD together with associated patch cords and/or jumpers at the ZD,

c) LDP(s) (optional),

d) LDP cable(s) (optional),

e) the EO(s).

A zone distribution cable shall be continuous from the ZD to the EO(s) unless an LDP is installed (see 5.7.8).

5.4.6 Design objectives

In order to provide the longest operational life while minimizing the disruption and cost associated with re-cabling, the fixed installed cabling should be designed to

a) support the broadest set of existing and emerging applications,

b) accommodate the anticipated growth in volume of supported applications throughout the predicted lifetime of the installation.

In addition, the provision of redundancy within a cabling design should be considered (see also 5.7.2).

5.5 Accommodation of functional elements

Figure 4 shows an example of how the functional elements are accommodated in a building (only a single floor of the building is shown for simplicity).

The MD, ID, ZD and LDP shall be housed in permanent and accessible locations within the data centre.

The ENI shall be housed in permanent and accessible location either internal or external to the data centre.

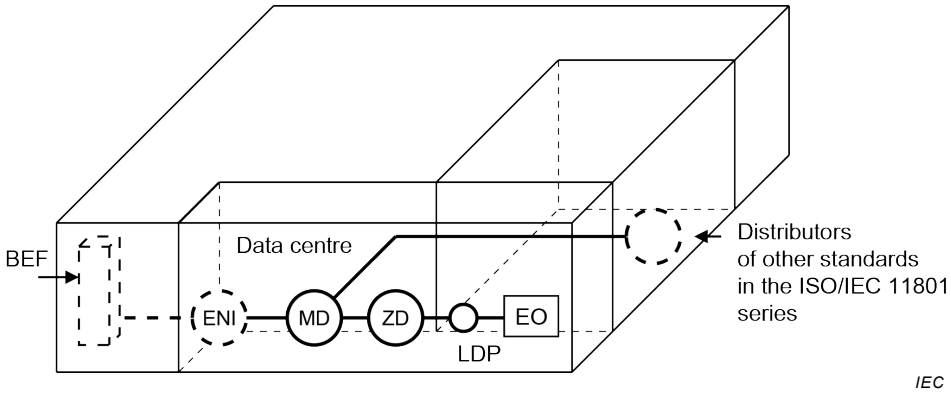

Figure 4 – Example of accommodation of functional elements

5.6 Interfaces

5.6.1 Equipment interfaces and test interfaces

Potential equipment interfaces for data centres are located at the ends of the cabling subsystems (as shown in Figure 5). An LDP does not provide an equipment interface to the generic cabling system.

Documents
Document Sharing Hub
Full document details: BS ISO/IEC 11801-5:2017