BS ISO/IEC 14776-253:2023

BSI Standards Publication

Information technology — Small Computer System Interface (SCSI)

Part 253: USB attached SCSI - 3 (UAS-3)

Documents
Document Sharing Hub

Full document details: BS ISO/IEC 14776-253:2023

National foreword

This British Standard is the UK implementation of ISO/IEC 14776-253:2023.

The UK participation in its preparation was entrusted to Technical Committee ICT/1, Information systems co-ordination.

A list of organizations represented on this committee can be obtained on request to its committee manager.

Contractual and legal considerations

This publication has been prepared in good faith, however no representation, warranty, assurance or undertaking (express or implied) is or will be made, and no responsibility or liability is or will be accepted by BSI in relation to the adequacy, accuracy, completeness or reasonableness of this publication. All and any such responsibility and liability is expressly disclaimed to the full extent permitted by the law.

This publication is provided as is, and is to be used at the recipient's own risk.

The recipient is advised to consider seeking professional guidance with respect to its use of this publication.

This publication is not intended to constitute a contract. Users are responsible for its correct application.

© The British Standards Institution 2023
Published by BSI Standards Limited 2023

ISBN 978 0 539 24513 4

ICS 35.200

Compliance with a British Standard cannot confer immunity from legal obligations.

This British Standard was published under the authority of the Standards Policy and Strategy Committee on 31 August 2023.

Amendments/corrigenda issued since publication

Date	Text affected

Documents
Document Sharing Hub

Full document details: BS ISO/IEC 14776-253:2023

INTERNATIONAL STANDARD

ISO/IEC 14776-253

First edition
2023-04

Information technology — Small Computer System Interface (SCSI) —

Part 253:
USB attached SCSI - 3 (UAS-3)

Reference number
ISO/IEC 14776-253:2023(E)

Documents
Document Sharing Hub

© ISO/IEC 2023

Full document details: BS ISO/IEC 14776-253:2023

COPYRIGHT PROTECTED DOCUMENT

© ISO/IEC 2023

All rights reserved. Unless otherwise specified, or required in the context of its implementation, no part of this publication may be reproduced or utilized otherwise in any form or by any means, electronic or mechanical, including photocopying, or posting on the internet or an intranet, without prior written permission. Permission can be requested from either ISO at the address below or ISO's member body in the country of the requester.

ISO copyright office
CP 401 • Ch. de Blandonnet 8
CH-1214 Vernier, Geneva
Phone: +41 22 749 01 11
Email: copyright@iso.org
Website: www.iso.org

Published in Switzerland

© ISO/IEC 2023 – All rights reserved

Documents
Document Sharing Hub

Full document details: BS ISO/IEC 14776-253:2023

Foreword

ISO (the International Organization for Standardization) and IEC (the International Electrotechnical Commission) form the specialized system for worldwide standardization. National bodies that are members of ISO or IEC participate in the development of International Standards through technical committees established by the respective organization to deal with particular fields of technical activity. ISO and IEC technical committees collaborate in fields of mutual interest. Other international organizations, governmental and non-governmental, in liaison with ISO and IEC, also take part in the work.

The procedures used to develop this document and those intended for its further maintenance are described in the ISO/IEC Directives, Part 1. In particular, the different approval criteria needed for the different types of document should be noted (see www.iso.org/directives or www.iec.ch/members_experts/refdocs).

Attention is drawn to the possibility that some of the elements of this document may be the subject of patent rights. ISO and IEC shall not be held responsible for identifying any or all such patent rights. Details of any patent rights identified during the development of the document will be in the Introduction and/or on the ISO list of patent declarations received (see www.iso.org/patents) or the IEC list of patent declarations received (see https://patents.iec.ch).

Any trade name used in this document is information given for the convenience of users and does not constitute an endorsement.

For an explanation of the voluntary nature of standards, the meaning of ISO specific terms and expressions related to conformity assessment, as well as information about ISO's adherence to the World Trade Organization (WTO) principles in the Technical Barriers to Trade (TBT), see www.iso.org/iso/foreword.html. In the IEC, see www.iec.ch/understanding-standards.

This document was prepared by INCITS (as INCITS 572-2021) and drafted in accordance with its editorial rules. It was assigned to Joint Technical Committee ISO/IEC JTC 1, *Information technology*, and adopted under the “fast-track procedure”.

A list of all parts in the ISO/IEC 14776 series can be found on the ISO and IEC websites.

Any feedback or questions on this document should be directed to the user’s national standards body. A complete listing of these bodies can be found at www.iso.org/members.html and www.iec.ch/national-committees.

© ISO/IEC 2023 – All rights reserved

Documents
Document Sharing Hub
Full document details: BS ISO/IEC 14776-253:2023

Documents
Document Sharing Hub

Contents

Page

Foreword v

Introduction x

SCSI standards family xi

1 Scope 1

2 Normative references 1

3 Definitions, symbols, abbreviations, and conventions 2
3.1 Definitions 2
3.2 Symbols and abbreviations 4
3.2.1 Abbreviations 4
3.2.2 Units 4
3.2.3 Mathematical operators 4
3.3 Keywords 5
3.4 Editorial conventions 5
3.5 Numeric and character conventions 6
3.5.1 Numeric conventions 6
3.5.2 Byte encoded character strings conventions 7
3.6 Sequence figure notation 8
3.7 Notation for procedures and functions 8

4 Model 9
4.1 Model overview 9
4.2 Tag handling and command identifiers 10
4.2.1 Tag handling and command identifiers overview 10
4.2.2 LUN determination without a LOGICAL UNIT NUMBER field 10
4.2.3 Tag checking 11
4.3 Data transfers 11
4.4 USB-3 ERDY transaction packet considerations 12
4.5 UAS domain 13
4.6 Names and identifiers 15
4.7 Resets 15
4.8 I_T Nexus loss 15
4.9 Target power loss expected 15
4.10 USB error handling 15

5 USB 16
5.1 USB overview 16
5.2 USB resource requirements 16
5.2.1 Overview 16
5.2.2 USB class specific requests 16
5.2.3 USB descriptors 16

6 Transport 21
6.1 Transport overview 21
6.2 IUs 21
6.2.1 IUs Overview 21
6.2.2 COMMAND IU 22
6.2.3 READ READY IU 23
6.2.4 WRITE READY IU 23
6.2.5 SENSE IU 24

© ISO/IEC 2023 – All rights reserved

AVA Documents
Document Sharing Hub

Full document details: BS ISO/IEC 14776-253:2023

6.2.6 RESPONSE IU 24
6.2.7 TASK MANAGEMENT IU 26
6.3 Information unit sequences 28
6.3.1 Overview 28
6.3.2 Non-data command/sense sequence 29
6.3.3 Non-data command/response sequence 29
6.3.4 Data-out command sequence 30
6.3.5 Data-in command sequence 31
6.3.6 Task management function sequence 32
6.3.7 Bi-directional command sequence 33
6.3.8 Multiple command example 34

7 SCSI Application Layer 36
7.1 Device Identification VPD page 36
7.2 Transport Protocol Services 36
7.2.1 SCSI transport protocol services overview 36
7.2.2 Send SCSI Command transport protocol service 38
7.2.3 SCSI Command Received transport protocol service 39
7.2.4 Send Command Complete transport protocol service 40
7.2.5 Command Complete Received transport protocol service 41
7.2.6 Send Data-In transport protocol service 42
7.2.7 Data-In Delivered transport protocol service 43
7.2.8 Receive Data-Out transport protocol service 44
7.2.9 Data-Out Received transport protocol service 45
7.2.10 Terminate Data Transfer transport protocol service 45
7.2.11 Data Transfer Terminated transport protocol service 46
7.2.12 Send Task Management Request transport protocol service 46
7.2.13 Task Management Request Received transport protocol service 47
7.2.14 Task Management Function Executed transport protocol service 47
7.2.15 Received Task Management Function Executed transport protocol service 48
7.2.16 USB Acknowledgement 49

Annex A (Informative) Bibliography 50

© ISO/IEC 2023 – All rights reserved
AVA Documents
Document Sharing Hub

Full document details: BS ISO/IEC 14776-253:2023

Tables

Page

1 Numbering conventions 6
2 SCSI architecture model object name attributes and identifier attributes 15
3 Device descriptor 16
4 Configuration descriptor 17
5 Interface Descriptor 18
6 Bulk-in endpoint descriptor 18
7 Bulk-out endpoint descriptor 19
8 Pipe Usage descriptor 19
9 Pipe ID 20
10 IU ID field summary 21
11 IU Header 21
12 COMMAND IU 22
13 TASK ATTRIBUTE field 22
14 READ READY IU 23
15 WRITE READY IU 23
16 SENSE IU 24
17 RESPONSE IU 25
18 RESPONSE CODE field 25
19 TASK MANAGEMENT IU 26
20 task management function field 27
21 Device Identification VPD page designation descriptors for the UAS target port 36
22 Execute Command procedure call transport protocol services 37
23 Task management function procedure call transport protocol services 38
24 Send SCSI Command transport protocol service arguments 38
25 SCSI Command Received transport protocol service arguments 39
26 Send Command Complete transport protocol service arguments 40
27 Command Complete Received transport protocol service arguments 41
28 Send Data-In transport protocol service arguments 42
29 Data-In Delivered transport protocol service arguments 43
30 Receive Data-Out transport protocol service arguments 44
31 Data-Out Received transport protocol service arguments 45
32 DELIVERY FAILURE to additional sense code mapping 45
33 Terminate Data Transfer transport protocol service arguments 45
34 Data Transfer Terminated transport protocol service arguments 46
35 Send Task Management Request transport protocol service arguments 46
36 UAS Task Management Functions Nexus Usage 46
37 Task Management Request Received transport protocol service arguments 47
38 Task Management Function Executed transport protocol service arguments 47
39 Service Response argument associations with the RESPONSE CODE field 48
40 Received Task Management Function Executed transport protocol service arguments 48
41 USB Acknowledgement 49

© ISO/IEC 2023 – All rights reserved

AVA Documents
Document Sharing Hub

Full document details: BS ISO/IEC 14776-253:2023

Figures

Page
0 SCSI document relationships xi
1 Example Sequence figure 8
2 USB Model 9
3 Example Simple UAS domain 13
4 Example Complex UAS Domain 14
5 UAS sequence figure notation 28
6 Non-data transfer with Sense 29
7 Non-data Transfer with Response 29
8 Write Data Transfer 30
9 Read Data Transfer 31
10 Task Management 32
11 Bi-directional Data Transfer 33
12 Multiple Command Example 35

© ISO/IEC 2023 – All rights reserved
AVA Documents
Document Sharing Hub

Full document details: BS ISO/IEC 14776-253:2023

Foreword (This foreword is not part of American National Standard INCITS 572-2021.)

The purpose of this standard is to define requirements for the transmission of SCSI commands, in a manner compliant with SAM-6, across a USB physical interface.

Requests for interpretation, suggestions for improvement and addenda, or defect reports are welcome. They should be sent to the INCITS Secretariat, National Committee for Information Technology Standards, Information Technology Institute, 700 K Street, NW, Suite 600, Washington, DC 20001.

This standard was processed and approved for submittal to ANSI by the InterNational Committee for Information Technology Standards (INCITS). Committee approval of the standard does not necessarily imply that all committee members voted for approval. At the time of it approved this standard, INCITS had the following members:

Laura Lindsay, Chair
Donald Deutsch, Vice-Chair
Jennifer Garner, Secretary

Organization Represented	*Name of Representative*
Adobe Systems, Inc.	Scott Foshee
AIM Global, Inc.	Steve Halliday
	Mary Lou Bosco (Alt.)
	Chuck Evanhoe (Alt.)
Amazon Web Services, Inc.	Tyler Messa
	Oliver Bell (Alt)
	Sean Estrada (Alt.)
Apple	Helene Workman
	David Singer (Alt.)
	Anna Weinberg (Alt.)
CA Technologies	Ron Doyle
Department of Commerce - NIST	Michael Hogan
	Lisa Carnahan (Alt.)
	Wo Chang (Alt.)
	Sal Francomacaro (Alt.)
	Suzanne Radell (Alt.)
Farance, Inc.	Frank Farance
	Timothy Schoechle (Alt.)
Futurewei Technologies, Inc.	Wael Diab
	Wilbert Adams (Alt.)
	Timothy Jeffries (Alt.)
Google	Catherine Nelson
	John Britton (Alt.)
	Inayat Kaur (Alt.)
	Ryan Wagner (Alt.)
	Lenora Zimmerman (Alt.)
GS1GO	Steven Keddie
	Edward Merrill (Alt.)
	Dan Mullen (Alt.)
HP, Inc.	Muhammad Ali
	Paul Jeran (Alt.)
IBM Corporation	Arnaud Le Hors
	Alexander Tarpinian (Alt.)
Intel Corporation	Philip Wennblom
	Grace Wei (Alt.)
Microsoft Corporation	Laura Lindsay
	John Calhoon (Alt.)
	Gary Sullivan (Alt.)
Oracle	Donald Deutsch
	Anish Karmarkar (Alt.)
	Michael Kavanaugh (Alt.)
	Jan-Eike Michels (Alt.)
	Elaine Newton (Alt.)

© ISO/IEC 2023 – All rights reserved

AVA Documents Document Sharing Hub

Full document details: BS ISO/IEC 14776-253:2023

Organization Represented	*Name of Representative*
Sandflow Consulting LLC	Pierre-Anthony Lemieux
Telecommunications Industry Association (TIA)	Florence Otieno
United States Dept. of Defense - Joint Artificial Intelligence Center	Sunmin Kim
	Alka Patel (Alt.)
VMware, Inc.	Eric Betts
	Mary Brett (Alt.)
	Minchene Tang (Alt.)

Technical Committee T10 on SCSI Storage Interfaces, which reviewed this standard, had the following members:

William Martin, Chair
Curtis Ballard, Vice-Chair
Curtis Stevens, Secretary
Frederick Knight, International Representative

Organization Represented	*Name of Representative*
Advantest	Danielle Romano
Amphenol Corporation	Paul Coddington
	Brad Brubaker (Alt.)
	Zhineng Fan (Alt.)
	Adrian Green (Alt.)
	Donald Harper (Alt.)
	Yifan Huang (Alt.)
	Michael Klempa (Alt.)
	Sam Kocsis (Alt.)
	Martin Li (Alt.)
	Chris Lyon (Alt.)
	Raghav Nallan (Alt.)
	Alex Persaud (Alt.)
	Michael Scholeno (Alt.)
	Hu Silver (Alt.)
	Michael Wingard (Alt.)
	CN Wong (Alt.)
	Matt Wright (Alt.)
Anritsu Corporation	Tadanori Nishikobara
	Yuji Sekine (Alt.)
BizLink Technology, Inc.	Tristan Hsiao
Broadcom, Inc.	Brad Besmer
	Jim Borowiak (Alt.)
	Srikiran Dravida (Alt.)
	John Gardner (Alt.)
	Jeffrey Gauvin (Alt.)
	Rick Kutcipal (Alt.)
	Bernhard Laschinsky (Alt.)
	David Peterson (Alt.)
	Robert Sheffield (Alt.)
	James Smart (Alt.)
	Jason Stuhlsatz (Alt.)
	Steven Wilson (Alt.)
Cadence Design Systems, Inc.	Lana Chan
	Vinod Lakshman (Alt.)
	Deep Mehta (Alt.)
	Gurudatta Mewundi (Alt.)
Dell, Inc.	Kevin Marks
	David Black (Alt.)
	George Ericson (Alt.)
	Christopher Goonan (Alt.)
	Bill Lynn (Alt.)
	Marlon Ramroopsingh (Alt.)
Facebook	Ross Stenfort
Flextronics International (Taiwan), Ltd.	Roger Wan
	Istvan BakroNagy (Alt.)

© ISO/IEC 2023 – All rights reserved
AVA Documents Document Sharing Hub
Full document details: BS ISO/IEC 14776-253:2023

Organization Represented	*Name of Representative*
Foxconn Interconnect Technology, Ltd. (FIT)	Fred Fons
	Gary Hsieh (Alt.)
	Glenn Moore (Alt.)
	Miller Zhao (Alt.)
Futurewei Technologies, Inc.	Victor Cao
	Chaohong (Henry) Hu (Alt.)
	Timothy Jeffries (Alt.)
Google	Radha Ramachandran
	Thieu Le (Alt.)
Hewlett Packard Enterprise	Curtis Ballard
	Chris Cheng (Alt.)
	Robert Elliott (Alt.)
	Barry Olawsky (Alt.)
	Jeff Wolford (Alt.)
IBM Corporation	Kevin Butt
	Mike Osborne (Alt.)
Intel Corporation	Michael Hoard
	Michael Allison (Alt.)
	Kim Malone (Alt.)
	Minesh Patel (Alt.)
	Eric Pickering (Alt.)
	Adee Ran (Alt.)
	Tzewen Wang (Alt.)
	Juntao Yuan (Alt.)
JMicron Technology Corporation	Gordon Chang
Keysight Technologies, Inc.	Vincent Yew
Kioxia Corporation	John Geldman
	Cameron Brett (Alt.)
	Mark Carlson (Alt.)
	Don Harwood (Alt.)
	Koichi Nagai (Alt.)
	Paul Suhler (Alt.)
	Tatsuya Tanaka (Alt.)
Lotes Company, Ltd.	DT Dao
	Stephen Chiu (Alt.)
	John Lynch (Alt.)
LUXSHARE-ICT, Inc.	Scott Shuey
	Josue Castillo (Alt.)
	Jinhua Chen (Alt.)
	Pat Young (Alt.)
Marvell Semiconductor, Inc.	Craig Carlson
	Wei Liu (Alt.)
	James Walch (Alt.)
Microsemi, a Mirochip Company	Jermiah Tussey
	Sapna Devi (Alt.)
	Sanjay Goyal (Alt.)
	Vincent Hache (Alt.)
	David Hong (Alt.)
	Adnan Jiwani (Alt.)
	Chethen K (Alt.)
	Marudhu Karthikeyan (Alt.)
	Anil Kumar (Alt.)
	Nitin Kumar (Alt.)
	Keith Shaw (Alt.)
	Ariel Sibley (Alt.)
	Tim Symons (Alt.)
	Gregory Tabor (Alt.)
Microsoft Corporation	Lee Prewitt
	Vishal Jose Mannanal (Alt.)
	Bryan Matthew (Alt.)
Molex, Inc.	Alexandra Haser
	Darian Schulz (Alt.)
	Scott Sommers (Alt.)

© ISO/IEC 2023 – All rights reserved

AVA Documents Document Sharing Hub

Full document details: BS ISO/IEC 14776-253:2023

Organization Represented	*Name of Representative*
NetApp, Inc.	Frederick Knight
	Chris Fore (Alt.)
	Jaimon George (Alt.)
	John Meneghini (Alt.)
Oracle	Martin Petersen
	Jon Allen (Alt.)
	Ioannis Psyllas (Alt.)
QNAP Systems, Inc.	Ming-chih Chang
	CH Yang (Alt.)
Quantum Corporation	Darryl Torske
	Carsten Prigge (Alt.)
Realtek Semiconductor	Chien-Kuo Cheng
Samsung Semiconductor, Inc. (SSI)	William Martin
	Judy Brock (Alt.)
	HeeChang Cho (Alt.)
	MiKyeong Kang (Alt.)
	Sung Lee (Alt.)
Samtec, Inc.	David Givens
Seagate Technology	Gerald Houlder
	Umamahesh Allenki (Alt.)
	Andre Boyogueno (Alt.)
	Alvin Cox (Alt.)
	Ian Davies (Alt.)
	John Fleming (Alt.)
	Jim Hatfield (Alt.)
	Anil Keste (Alt.)
	Tony Kilwein (Alt.)
	Curtis Stevens (Alt.)
	Judy Westby (Alt.)
ShenZhen TIGO Semiconductor Co., Ltd.	Jiwei Liu
Silicon Motion, Inc.	Amanda Huang
	Edward Hsieh (Alt.)
	Randy Hsu (Alt.)
	Sky Hsu (Alt.)
SK Hynix	Taeho Lee
	Jungki Noh (Alt.)
	Junho Son (Alt.)
Socionext	Masaru Suzuki
	Toru Iwata (Alt.)
	Hideyuki Kabuo (Alt.)
	Masanori Okinoi (Alt.)
TE Connectivity	Matt Schumacher
	Tom Grzysiewicz (Alt.)
	Kyle Klinger (Alt.)
	Jeff Mason (Alt.)
	Joel Meyers (Alt.)
	Nathan Tracy (Alt.)
Teledyne LeCroy Corporation	Amit Bakshi
	Rakesh Kathiresan Natarajan (Alt.)
	Douglas Lee (Alt.)
Toshiba America Electronic Components, Inc.	Patrick Hery
	Johanna Hernandez (Alt.)
	Scott Wright (Alt.)
Ultratest Solutions, Ltd.	Jonathan Woodward
	Mike Mavritsin (Alt.)
Unisys Corporation	Jeffrey Dremann
	Phil Shelton (Alt.)
Viavi Solutions, Inc.	Jason Rusch
	George Bullis (Alt.)
	Dominic Coupal (Alt.)
	Paul Gentieu (Alt.)
	Jason Mann (Alt.)
	Francisco Roy (Alt.)
	Yamini Shastry (Alt.)

© ISO/IEC 2023 – All rights reserved
AVA Documents
Document Sharing Hub
Full document details: BS ISO/IEC 14776-253:2023

Organization Represented	*Name of Representative*
VMware, Inc.	Neil MacLean Wenchao Cui (Alt.) George Gao (Alt.) Wenhua Liu (Alt.) Mike Panas (Alt.) Murali Rajagopal (Alt.) Ahmad Tawil (Alt.)
Western Digital Corporation	Dave Landsman David Brewer (Alt.) Jorge Campello (Alt.) Marvin DeForest (Alt.) Kirill Dimitrov (Alt.) Michael Koffman (Alt.) Larry McMillian (Alt.) Chet Mercardo (Alt.) Nadesan Narenthiran (Alt.) Christopher Reed (Alt.) Yoni Shternhell (Alt.) Ralph Weber (Alt.) Eric Zornberg (Alt.)

Emeritus
William Ham
John Lohmeyer

© ISO/IEC 2023 – All rights reserved

AVA Documents
Document Sharing Hub

Full document details: BS ISO/IEC 14776-253:2023

Introduction

The USB Attached SCSI standard (UAS) is divided into the following clauses:

Clause 1 describes the scope.

Clause 2 provides normative references for the entire standard.

Clause 3 provides definitions, abbreviations, and conventions used within the entire standard.

Clause 4 describes the model.

Clause 5 describes USB requirements.

Clause 6 describes transport requirements (e.g., IUs).

Clause 7 describes the SCSI Application Layer Transport Protocol Services.

Bibliography lists a bibliography for this standard.

© ISO/IEC 2023 – All rights reserved

AVA Documents
Document Sharing Hub

Full document details: BS ISO/IEC 14776-253:2023

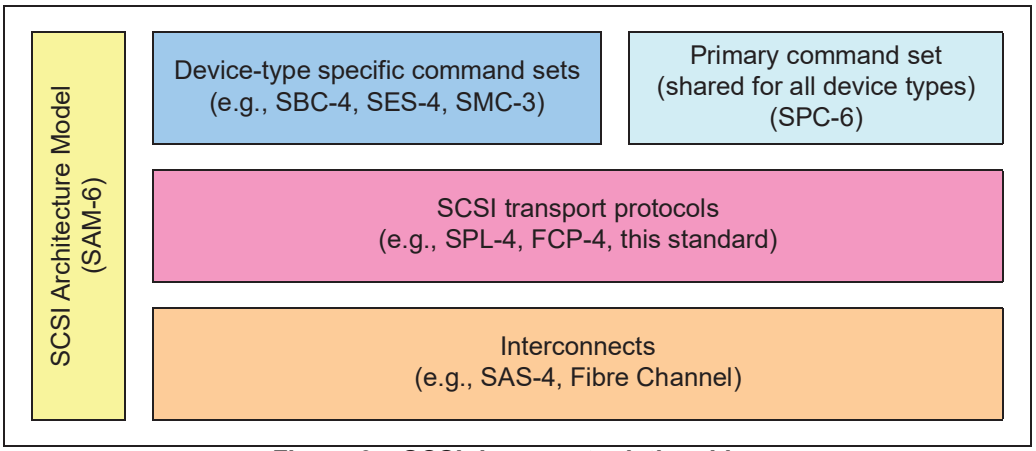

Figure 0 – SCSI document relationships

SCSI standards family

Figure 0 shows the relationship of this standard to the other standards and related projects in the SCSI family of standards as of the publication of this standard.

The SCSI document structure in figure 0 is intended to show the general applicability of the documents to one another. Figure 0 is not intended to imply any hierarchy, protocol stack, or system architecture relationship.

The functional areas identified in figure 0 characterize the scope of standards within a group as follows:

SCSI Architecture Model: Defines the SCSI systems model, the functional partitioning of the SCSI standard set and requirements applicable to all SCSI implementations and implementation standards.

Device-Type Specific Command Sets: Implementation standards that define specific device types including a device model for each device type. These standards specify the required commands and behaviors that are specific to a given device type and prescribe the requirements to be followed by a SCSI initiator device when sending commands to a SCSI target device having the specific device type. The commands and behaviors for a specific device type may include by reference commands and behaviors that are defined by other command sets.

Primary Command Set: An implementation standard that defines a model for all SCSI device types. This standard specifies the required commands and behavior that is common to all SCSI devices, regardless of device type, and prescribes the requirements to be followed by a SCSI initiator device when sending commands to any SCSI target device.

SCSI Transport Protocols: Implementation standards that define the requirements for exchanging information so that different SCSI devices are capable of communicating.

© ISO/IEC 2023 – All rights reserved

AVA Documents
Document Sharing Hub

Full document details: BS ISO/IEC 14776-253:2023

Interconnects: Implementation standards that define the communications mechanism employed by the SCSI transport protocols. These standards may describe the electrical and signaling requirements essential for SCSI devices to interoperate over a given interconnect. Interconnect standards may allow the interconnection of devices other than SCSI devices in ways that are outside the scope of this standard.

The term SCSI is used to refer to the family of standards described in this subclause.

© ISO/IEC 2023 – All rights reserved
Documents
Document Sharing Hub
Full document details: BS ISO/IEC 14776-253:2023

USB Attached SCSI - 3 (UAS-3)

1 Scope

This standard describes a SCSI transport protocol (see SAM-6) for USB-2 and USB-3 with the following properties:

a) a mechanism to send commands associated with any T10 command standard to a USB device;
b) compliance with SCSI Architecture Model - 6 (e.g., autosense and command queuing); and
c) other capabilities.

2 Normative references

The following standards contain provisions which, through reference in this text, constitute provisions of this American National Standard. All standards are subject to revision, and parties to agreements based on this American National Standard are encouraged to investigate the possibility of applying the most recent editions of the following standards:

INCITS 546, *Information technology - SCSI Architecture Model - 6 (SAM-6)* (under development)

INCITS 566, *Information technology - SCSI Primary Commands - 6 (SPC-6)* (under development)

Universal Serial Bus Specification Revision 2.0 (USB-2) [1]

Universal Serial Bus 3.2 Specification Revision 1.0 (USB-3) [1]

Universal Serial Bus Mass Storage Class Specification Overview Rev 1.4 (MSC) [1]

1. For information on the current status of USB documents, see the USB Implementors Forum at http://www.usb.org.

© ISO/IEC 2023 – All rights reserved

Documents
Document Sharing Hub

Full document details: BS ISO/IEC 14776-253:2023

3 Definitions, symbols, abbreviations, and conventions

3.1 Definitions

3.1.1 application client
object that is the source of SCSI commands

Note 1 to entry: See SAM-6.

3.1.2 Bulk-in Endpoint Descriptor
USB Endpoint Descriptor with the BM ATTRIBUTES field set to 02h and bit 7 of the bEndPoint address field set to one

3.1.3 Bulk-in pipe
USB pipe used to transfer data and status from the UAS target port to the UAS initiator port

3.1.4 Bulk-out Endpoint Descriptor
USB Endpoint Descriptor with the BM ATTRIBUTES field set to 02h and bit 7 of the bEndPoint address field set to zero

3.1.5 Bulk-out pipe
USB pipe used to transfer data and commands from the UAS initiator port to the UAS target port

3.1.6 default pipe
USB message pipe created by the USB System Software to pass control and status information between the host and a USB device's endpoint zero

Note 1 to entry: See USB-2.

3.1.7 information unit (IU)
formatted collection of data that carries command information, task management function command information, sense command information, response command information, read ready command information, or write ready command information

Note 1 to entry: See 6.2.

3.1.8 logical unit number (LUN)
64-bit identifier for a logical unit

Note 1 to entry: See SAM-6.

3.1.9 pipe
logical abstraction using USB endpoints representing an association between a function (see USB-2 and USB-3) of a USB device and an application client

3.1.10 read data
data transferred to the SCSI application client's data-in buffer from the SCSI device server

Note 1 to entry: Read data is requested by the Send Data-In transport protocol service (see 7.2.6).

3.1.11 service delivery subsystem
part of the USB I/O system (see USB-3) that transmits information between the UAS initiator port and the UAS target port

Note 1 to entry: USB hubs and USB cables are examples of parts of the USB I/O system that are contained in the service delivery subsystem.

© ISO/IEC 2023 – All rights reserved
AVA Documents
Document Sharing Hub

Full document details: BS ISO/IEC 14776-253:2023

3.1.12 task manager
object that controls the sequencing of commands and processes task management functions

Note 1 to entry: See SAM-6.

3.1.13 transaction packet
header packet used to communicate information between a UAS target device and a UAS initiator device

Note 1 to entry: See USB-3.

3.1.14 UAS domain
one UAS initiator port and one or more UAS target ports

Note 1 to entry: See 4.5.

3.1.15 UAS initiator device
USB host (see USB-2 and USB-3) that contains one or more UAS initiator ports

3.1.16 UAS initiator port
USB host (see USB-2 and USB-3) and USB host port components (see USB-2 and USB-3)

3.1.17 UAS target device
USB device that contains one or more UAS target ports

3.1.18 UAS target port
USB interface that contains two USB Bulk-in endpoints (see USB-3), two USB Bulk-out endpoints (see USB-3), and the default USB control endpoint (see USB-3)

3.1.19 USB device
one or more USB interfaces and the default control endpoint

Note 1 to entry: See USB-2 and USB-3.

3.1.20 USB endpoint
collection of characteristics describing the USB device implementation of a pipe

Note 1 to entry: See USB-2 and USB-3.

3.1.21 USB interface
description of one or more USB endpoints

Note 1 to entry: See USB-2 and USB-3.

3.1.22 USB packet
unit of data formatted for transmission over Super-Speed USB or High-Speed USB

3.1.23 write data
data transferred from the SCSI application client's data-out buffer to the SCSI device server

Note 1 to entry: Write data is requested by the Receive Data-Out transport protocol service (see 7.2.8).

© ISO/IEC 2023 – All rights reserved

AVA Documents
Document Sharing Hub

Full document details: BS ISO/IEC 14776-253:2023