BS ISO/IEC 14776-262:2017

BSI Standards Publication

Information technology — Small Computer System Interface (SCSI)

Part 262: SAS Protocol Layer — 2 (SPL-2)

Documents
Document Sharing Hub

Full document details: BS ISO/IEC 14776-262:2017

National foreword

This British Standard is the UK implementation of ISO/IEC 14776-262:2017.

The UK participation in its preparation was entrusted to Technical Committee I/-, Miscellaneous standards materials and chemicals.

A list of organizations represented on this committee can be obtained on request to its secretary.

This publication does not purport to include all the necessary provisions of a contract. Users are responsible for its correct application.

© The British Standards Institution 2017.
Published by BSI Standards Limited 2017

ISBN 978 0 580 84346 4
ICS 35.200

Compliance with a British Standard cannot confer immunity from legal obligations.

This British Standard was published under the authority of the Standards Policy and Strategy Committee on 31 March 2017.

Amendments/corrigenda issued since publication

Date	Text affected

Documents
Document Sharing Hub

Full document details: BS ISO/IEC 14776-262:2017

ISO/IEC 14776-262

Edition 1.0 2017-02

INTERNATIONAL STANDARD

colour inside

Information technology – Small Computer System Interface (SCSI) – Part 262: SAS Protocol Layer – 2 (SPL-2)

INTERNATIONAL
ELECTROTECHNICAL
COMMISSION

ICS 35.200

ISBN 978-2-8322-3952-0

Warning! Make sure that you obtained this publication from an authorized distributor.

Documents
Document Sharing Hub

Full document details: BS ISO/IEC 14776-262:2017

FOREWORD ... 37
INTRODUCTION ... 38
General ... 38
SCSI standards family ... 39

1 Scope ... 40

2 Normative references ... 41

3 Terms, definitions, symbols, abbreviations, keywords, and conventions ... 42
3.1 Terms and definitions ... 42
3.2 Symbols and abbreviations ... 71
3.3 Keywords ... 74
3.4 Editorial conventions ... 75
3.5 UML notation conventions ... 76
3.5.1 Notation conventions overview ... 76
3.5.2 Constraint and note conventions ... 77
3.5.3 Class diagram conventions ... 77
3.5.4 Object diagram conventions ... 81
3.6 State machine conventions ... 83
3.6.1 State machine conventions overview ... 83
3.6.2 Transitions ... 84
3.6.3 Messages, requests, indications, confirmations, responses, and event notifications ... 84
3.6.4 State machine counters, timers, and variables ... 84
3.6.5 State machine arguments ... 85
3.7 Bit and byte ordering ... 85
3.8 Notation for procedures and functions ... 85

4 General ... 87
4.1 Architecture ... 87
4.1.1 Architecture overview ... 87
4.1.2 Physical links and phys ... 88
4.1.3 Logical links ... 93
4.1.4 Narrow ports and wide ports ... 93
4.1.5 Application clients and device servers ... 96
4.1.6 SAS devices ... 97
4.1.7 Expander devices ... 98
4.1.8 Service delivery subsystem ... 99
4.1.9 Domains ... 99
4.1.10 Expander device topologies ... 102
4.1.10.1 Expander device topology overview ... 102
4.1.10.2 Expander device topologies ... 102
4.1.11 Pathways ... 104
4.1.12 Connections ... 104
4.1.13 Broadcasts ... 106
4.2 Names and identifiers ... 109
4.2.1 Names and identifiers overview ... 109
4.2.2 NAA IEEE Registered format identifier ... 109
4.2.3 NAA Locally Assigned format identifier ... 110
4.2.4 SAS address ... 111
4.2.5 Hashed SAS addresses ... 111
4.2.6 Device names and expander device SAS addresses ... 112
4.2.7 Device names for SATA devices with world wide names ... 112
4.2.8 Port names ... 113
4.2.9 Port identifiers and SAS port SAS addresses ... 113
4.2.10 Phy identifiers ... 114
4.3 State machines ... 115
4.3.1 State machine overview ... 115

Documents
Document Sharing Hub
Full document details: BS ISO/IEC 14776-262:2017

4.3.2 Transmit data path ... 116
4.3.3 Receive data path ... 121
4.3.4 State machines and SAS Device, SAS Port, and SAS Phy classes ... 125
4.4 Events ... 126
4.4.1 Reset sequences ... 126
4.4.2 Hard reset ... 128
4.4.2.1 Hard reset overview ... 128
4.4.2.2 Additional hard reset processing by SAS ports ... 128
4.4.2.3 Additional hard reset processing by expander ports ... 128
4.4.3 I_T nexus loss ... 128
4.4.4 Power loss expected ... 129
4.5 Expander device model ... 129
4.5.1 Expander device model overview ... 129
4.5.2 Expander ports ... 131
4.5.3 Expander connection manager (ECM) ... 131
4.5.4 Expander connection router (ECR) ... 131
4.5.5 Broadcast propagation processor (BPP) ... 132
4.5.6 Expander device interfaces ... 132
4.5.6.1 Expander device interface overview ... 132
4.5.6.2 Expander device interfaces detail ... 134
4.5.6.3 ECM interface ... 135
4.5.6.4 ECR interface ... 137
4.5.6.5 BPP interface ... 138
4.5.7 Expander device routing ... 140
4.5.7.1 Routing attributes and routing methods ... 140
4.5.7.2 Expander device topology routing attribute restrictions ... 140
4.5.7.3 Connection request routing ... 141
4.5.7.4 Expander route table ... 141
4.5.7.4.1 Expander route table overview ... 141
4.5.7.4.2 Phy-based expander route table ... 142
4.5.7.4.3 Expander-based expander route table ... 143
4.5.8 Expander device reduced functionality ... 143
4.5.9 Broadcast (Expander) handling ... 144
4.6 Discover process ... 144
4.6.1 Discover process overview ... 144
4.6.2 Starting the discover process (Broadcast (Change) handling) ... 144
4.6.3 Discover process traversal ... 144
4.6.4 Discover process in a self-configuring expander device ... 146
4.6.5 Enabling multiplexing ... 147
4.7 Configuration subprocess ... 147
4.7.1 Configuration subprocess overview ... 147
4.7.2 Allowed expander device topologies ... 148
4.7.3 Externally configurable expander device route table optimization ... 149
4.7.4 Externally configurable expander device expander route index order ... 150
4.8 Zoning ... 157
4.8.1 Zoning overview ... 157
4.8.2 Zoning expander device requirements ... 161
4.8.3 Zoning operation ... 164
4.8.3.1 Zone phy information ... 164
4.8.3.2 Zone groups ... 166
4.8.3.3 Zone permission table ... 166
4.8.3.4 Zoning expander route table ... 168
4.8.3.5 Source zone group and destination zone group determination ... 169
4.8.4 Zone phy information and link reset sequences ... 169
4.8.5 Broadcast processing in a zoning expander device with zoning enabled ... 172
4.8.6 Zone configuration ... 172
4.8.6.1 Zone configuration overview ... 172
4.8.6.2 Lock step ... 173

Documents
Document Sharing Hub
Full document details: BS ISO/IEC 14776-262:2017

4.8.6.3 Load step ... 173
4.8.6.4 Activate step ... 174
4.8.6.5 Unlock step ... 174
4.8.6.6 Zone lock inactivity timer ... 175
4.8.6.7 Enable a zoning expander device ... 175
4.9 SAS device and expander device power conditions ... 176
4.10 Phy power conditions ... 176
4.10.1 Low phy power conditions ... 176
4.10.1.1 Low phy power conditions overview ... 176
4.10.1.2 Active phy power condition ... 176
4.10.1.3 Partial phy power condition ... 176
4.10.1.4 Slumber phy power condition ... 177
4.10.1.5 End device low phy power conditions ... 177
4.10.1.6 Expander device low phy power conditions ... 177
4.10.2 SATA phy power conditions ... 178
4.11 Phy test functions ... 178
4.11.1 Phy test functions overview ... 178
4.11.2 Transmit pattern phy test function ... 179
4.12 Phy events ... 179

5 Phy layer ... 184
5.1 Phy layer overview ... 184
5.2 8b10b coding ... 184
5.2.1 8b10b coding overview ... 184
5.2.2 8b10b coding notation conventions ... 184
5.3 Character encoding and decoding ... 185
5.3.1 Introduction ... 185
5.3.2 Bit transmission order ... 185
5.3.3 Character transmission order ... 185
5.3.4 Frame transmission order ... 185
5.3.5 Running disparity (RD) ... 186
5.3.6 Data characters ... 186
5.3.7 Control characters ... 191
5.3.8 Encoding characters in the transmitter ... 192
5.3.9 Decoding characters in the receiver ... 193
5.4 Dwords, primitives, data dwords, and invalid dwords ... 193
5.5 Bit order ... 193
5.6 Out of band (OOB) signals ... 195
5.6.1 OOB signals overview ... 195
5.6.2 SP Transmission of OOB signals ... 195
5.6.3 Receiver detection of OOB signals ... 196
5.6.4 SATA port selection signal ... 198
5.6.5 Phy power conditions ... 199
5.7 Phy capabilities bits ... 199
5.8 BMC coding ... 203
5.8.1 BMC coding overview ... 203
5.8.2 TTIU bit cell encoding in the transmitter ... 204
5.8.3 TTIU bit transmission order ... 205
5.8.4 TTIU bit cell decoding in the receiver ... 205
5.9 Train_Tx-SNW TTIUs ... 206
5.9.1 Train_Tx-SNW TTIU format ... 206
5.9.2 Control/Status TTIU ... 207
5.9.3 Error Response TTIU ... 211
5.10 Phy reset sequences ... 213
5.10.1 Phy reset sequences overview ... 213
5.10.2 SATA phy reset sequence ... 214
5.10.2.1 SATA OOB sequence ... 214
5.10.2.2 SATA speed negotiation sequence ... 215

Documents
Document Sharing Hub
Full document details: BS ISO/IEC 14776-262:2017

5.10.3 SAS to SATA phy reset sequence ... 216
5.10.4 SAS to SAS phy reset sequence ... 217
5.10.4.1 SAS OOB sequence ... 217
5.10.4.2 SAS speed negotiation sequence ... 219
5.10.4.2.1 SAS speed negotiation sequence overview ... 219
5.10.4.2.2 SAS speed negotiation sequence timing specifications ... 219
5.10.4.2.3 Speed negotiation window (SNW) definitions ... 221
5.10.4.2.3.1 SNW definitions overview ... 221
5.10.4.2.3.2 SNW-1, SNW-2, and Final-SNW ... 221
5.10.4.2.3.3 SNW-3 ... 223
5.10.4.2.3.4 Train_Tx-SNW ... 224
5.10.4.2.3.4.1 Phy's transmitter initial condition ... 224
5.10.4.2.3.4.2 Transmitter training ... 224
5.10.4.2.3.4.3 Pattern marker ... 226
5.10.4.2.3.5 Train_Rx-SNW ... 227
5.10.4.2.4 SAS speed negotiation sequence ... 230
5.10.4.2.5 SAS speed negotiation sequence examples ... 231
5.10.4.2.6 Train_Tx pattern sequence ... 239
5.10.4.2.6.1 Train_Tx pattern sequence overview ... 239
5.10.4.2.6.2 Train_Tx pattern initial sequence ... 239
5.10.4.2.6.3 Train_Tx pattern handshake sequence ... 243
5.10.4.2.6.3.1 Train_Tx pattern handshake sequence overview ... 243
5.10.4.2.6.3.2 Attached phy's receiver increment or decrement request ... 243
5.10.4.2.6.3.3 Attached phy's receiver reference_1, reference_2, or no_equalization request ... 246
5.10.4.2.6.4 Train_Tx pattern completion sequence ... 248
5.10.4.2.6.5 Invalid TTIU sequence ... 251
5.10.4.3 Multiplexing sequence ... 252
5.10.5 Phy reset sequence after devices are attached ... 253
5.11 Phy power condition sequences ... 254
5.11.1 Transitioning from the active phy power condition to a low phy power condition ... 254
5.11.2 Transitioning from a low phy power condition to the active phy power condition ... 254
5.11.3 Events during low phy power condition ... 255
5.12 SP (phy layer) state machine ... 256
5.12.1 SP state machine overview ... 256
5.12.2 SP transmitter and SP receiver ... 259
5.12.3 OOB sequence states ... 262
5.12.3.1 OOB sequence states overview ... 262
5.12.3.2 SP0:OOB_COMINIT state ... 263
5.12.3.2.1 State description ... 263
5.12.3.2.2 Transition SP0:OOB_COMINIT to SP1:OOB_AwaitCOMX ... 264
5.12.3.2.3 Transition SP0:OOB_COMINIT to SP3:OOB_AwaitCOMINIT_Sent ... 264
5.12.3.2.4 Transition SP0:OOB_COMINIT to SP4:OOB_COMSAS ... 264
5.12.3.3 SP1:OOB_AwaitCOMX state ... 264
5.12.3.3.1 State description ... 264
5.12.3.3.2 Transition SP1:OOB_AwaitCOMX to SP0:OOB_COMINIT ... 264
5.12.3.3.3 Transition SP1:OOB_AwaitCOMX to SP4:OOB_COMSAS ... 264
5.12.3.4 SP2:OOB_NoCOMSASTimeout state ... 264
5.12.3.4.1 State description ... 264
5.12.3.4.2 Transition SP2:OOB_NoCOMSASTimeout to SP0:OOB_COMINIT ... 265
5.12.3.4.3 Transition SP2:OOB_NoCOMSASTimeout to SP4:OOB_COMSAS ... 265
5.12.3.5 SP3:OOB_AwaitCOMINIT_Sent state ... 265
5.12.3.5.1 State description ... 265
5.12.3.5.2 Transition SP3:OOB_AwaitCOMINIT_Sent to SP4:OOB_COMSAS ... 265
5.12.3.6 SP4:OOB_COMSAS state ... 265
5.12.3.6.1 State description ... 265
5.12.3.6.2 Transition SP4:OOB_COMSAS to SP5:OOB_AwaitCOMSAS_Sent ... 265
5.12.3.6.3 Transition SP4:OOB_COMSAS to SP6:OOB_AwaitNoCOMSAS ... 265
5.12.3.6.4 Transition SP4:OOB_COMSAS to SP7:OOB_AwaitCOMSAS ... 266

Documents
Document Sharing Hub
Full document details: BS ISO/IEC 14776-262:2017

5.12.3.7 SP5:OOB_AwaitCOMSAS_Sent state ... 266
5.12.3.7.1 State description ... 266
5.12.3.7.2 Transition SP5:OOB_AwaitCOMSAS_Sent to SP6:OOB_AwaitNoCOMSAS ... 266
5.12.3.8 SP6:OOB_AwaitNoCOMSAS state ... 266
5.12.3.8.1 State description ... 266
5.12.3.8.2 Transition SP6:OOB_AwaitNoCOMSAS to SP0:OOB_COMINIT ... 266
5.12.3.8.3 Transition SP6:OOB_AwaitNoCOMSAS to SP8:SAS_Start ... 266
5.12.3.9 SP7:OOB_AwaitCOMSAS state ... 266
5.12.3.9.1 State description ... 266
5.12.3.9.2 Transition SP7:OOB_AwaitCOMSAS to SP2:OOB_NoCOMSASTimeout ... 266
5.12.3.9.3 Transition SP7:OOB_AwaitCOMSAS to SP6:OOB_AwaitNoCOMSAS ... 266
5.12.3.9.4 Transition SP7:OOB_AwaitCOMSAS to SP16:SATA_COMWAKE ... 266
5.12.3.9.5 Transition SP7:OOB_AwaitCOMSAS to SP26:SATA _SpinupHold ... 267
5.12.4 SAS speed negotiation states ... 267
5.12.4.1 SAS speed negotiation states overview ... 267
5.12.4.2 Negotiation idle ... 267
5.12.4.3 SP8:SAS_Start state ... 270
5.12.4.3.1 State description ... 270
5.12.4.3.2 Transition SP8:SAS_Start to SP0:OOB_COMINIT ... 270
5.12.4.3.3 Transition SP8:SAS_Start to SP1:OOB_AwaitCOMX ... 270
5.12.4.3.4 Transition SP8:SAS_Start to SP9:SAS_WindowNotSupported ... 271
5.12.4.3.5 Transition SP8:SAS_Start to SP10:SAS_AwaitALIGN ... 271
5.12.4.3.6 Transition SP8:SAS_Start to SP27:SAS_Settings ... 271
5.12.4.4 SP9:SAS_WindowNotSupported state ... 271
5.12.4.4.1 State description ... 271
5.12.4.4.2 Transition SP9:SAS_WindowNotSupported to SP0:OOB_COMINIT ... 271
5.12.4.4.3 Transition SP9:SAS_WindowNotSupported to SP14:SAS_Fail ... 271
5.12.4.5 SP10:SAS_AwaitALIGN state ... 271
5.12.4.5.1 State description ... 271
5.12.4.5.2 Transition SP10:SAS_AwaitALIGN to SP0:OOB_COMINIT ... 271
5.12.4.5.3 Transition SP10:SAS_AwaitALIGN to SP11:SAS_AwaitALIGN1 ... 271
5.12.4.5.4 Transition SP10:SAS_AwaitALIGN to SP12:SAS_AwaitSNW ... 272
5.12.4.5.5 Transition SP10:SAS_AwaitALIGN to SP14:SAS_Fail ... 272
5.12.4.6 SP11:SAS_AwaitALIGN1 state ... 272
5.12.4.6.1 State description ... 272
5.12.4.6.2 Transition SP11:SAS_AwaitALIGN1 to SP0:OOB_COMINIT ... 272
5.12.4.6.3 Transition SP11:SAS_AwaitALIGN1 to SP12:SAS_AwaitSNW ... 272
5.12.4.6.4 Transition SP11:SAS_AwaitALIGN1 to SP14:SAS_Fail ... 272
5.12.4.7 SP12:SAS_AwaitSNW state ... 272
5.12.4.7.1 State description ... 272
5.12.4.7.2 Transition SP12:SAS_AwaitSNW to SP0:OOB_COMINIT ... 272
5.12.4.7.3 Transition SP12:SAS_AwaitSNW to SP13:SAS_Pass ... 272
5.12.4.8 SP13:SAS_Pass state ... 273
5.12.4.8.1 State description ... 273
5.12.4.8.2 Transition SP13:SAS_Pass to SP0:OOB_COMINIT ... 273
5.12.4.8.3 Transition SP13:SAS_Pass to SP8:SAS_Start ... 273
5.12.4.8.4 Transition SP13:SAS_Pass to SP15:SAS_PHY_Ready ... 273
5.12.4.9 SP14:SAS_Fail state ... 273
5.12.4.9.1 State description ... 273
5.12.4.9.2 Transition SP14:SAS_Fail to SP1:OOB_AwaitCOMX ... 273
5.12.4.9.3 Transition SP14:SAS_Fail to SP8:SAS_Start ... 273
5.12.4.10 SP15:SAS_PHY_Ready state ... 273
5.12.4.10.1 State description ... 273
5.12.4.10.2 Transition SP15:SAS_PHY_Ready to SP0:OOB_COMINIT ... 274
5.12.4.10.3 Transition SP15:SAS_PHY_Ready to SP31:SAS_PS_Low_Phy_Power ... 274
5.12.4.11 SP27:SAS_Settings state ... 274
5.12.4.11.1 State description ... 274
5.12.4.11.2 Transition SP27:SAS_Settings to SP0:OOB_COMINIT ... 274

Documents
Document Sharing Hub
Full document details: BS ISO/IEC 14776-262:2017

5.12.4.11.3 Transition SP27:SAS_Settings to SP1:OOB_AwaitCOMX ... 275
5.12.4.11.4 Transition SP27:SAS_Settings to SP8:SAS_Start ... 275
5.12.4.11.5 Transition SP27:SAS_Settings to SP28:SAS_TrainSetup ... 275
5.12.4.12 SP28:SAS_TrainSetup ... 275
5.12.4.12.1 State description ... 275
5.12.4.12.2 Transition SP28:SAS_TrainSetup to SP0:OOB_COMINIT ... 275
5.12.4.12.3 Transition SP28:SAS_TrainSetup to SP29:SAS_Train_Rx ... 276
5.12.4.12.4 Transition SP28:SAS_TrainSetup to SP34:SAS_Train_Tx ... 276
5.12.4.13 SP34:SAS_Train_Tx state ... 276
5.12.4.13.1 State description ... 276
5.12.4.13.2 Transition SP34:SAS_Train_Tx to SP1:OOB_AwaitCOMX ... 276
5.12.4.13.3 Transition SP34:SAS_Train_Tx to SP28:SAS_TrainSetup ... 276
5.12.4.13.4 Transition SP34:SAS_Train_Tx to SP29:SAS_Train_Rx ... 277
5.12.4.14 SP29:SAS_Train_Rx state ... 277
5.12.4.14.1 State description ... 277
5.12.4.14.2 Transition SP29:SAS_Train_Rx to SP0:OOB_COMINIT ... 277
5.12.4.14.3 Transition SP29:SAS_Train_Rx to SP1:OOB_AwaitCOMX ... 277
5.12.4.14.4 Transition SP29:SAS_Train_Rx to SP28:SAS_TrainSetup ... 277
5.12.4.14.5 Transition SP29:SAS_Train_Rx to SP30:SAS_TrainingDone ... 278
5.12.4.15 SP30:SAS_TrainingDone state ... 278
5.12.4.15.1 State description ... 278
5.12.4.15.2 Transition SP30:SAS_TrainingDone to SP0:OOB_COMINIT ... 278
5.12.4.15.3 Transition SP30:SAS_TrainingDone to SP1:OOB_AwaitCOMX ... 278
5.12.4.15.4 Transition SP30:SAS_TrainingDone to SP28:SAS_TrainSetup ... 278
5.12.4.15.5 Transition SP30:SAS_TrainingDone to SP15:SAS_PHY_Ready ... 279
5.12.5 SAS phy power conditions states ... 279
5.12.5.1 SAS phy power conditions states overview ... 279
5.12.5.2 SP31:SAS_PS_Low_Phy_Power state ... 280
5.12.5.2.1 State description ... 280
5.12.5.2.2 Transition SP31:SAS_PS_Low_Phy_Power to SP0:OOB_COMINIT ... 281
5.12.5.2.3 Transition SP31:SAS_PS_Low_Phy_Power to SP32:SAS_PS_ALIGN0 ... 281
5.12.5.3 SP32:SAS_PS_ALIGN0 state ... 281
5.12.5.3.1 State description ... 281
5.12.5.3.2 Transition SP32:SAS_PS _ALIGN0 state to SP0:OOB_COMINIT ... 281
5.12.5.3.3 Transition SP32:SAS_PS _ALIGN0 to SP33:SAS_PS _ALIGN1 ... 281
5.12.5.4 SP33:SAS_PS_ALIGN1 state ... 282
5.12.5.4.1 State description ... 282
5.12.5.4.2 Transition SP33:SAS_PS_ALIGN1 state to SP0:OOB_COMINIT ... 282
5.12.5.4.3 Transition SP33:SAS_PS_ALIGN1 state to SP15:SAS_PHY_Ready ... 282
5.12.6 SATA host emulation states ... 282
5.12.6.1 SATA host emulation states overview ... 282
5.12.6.2 SP16:SATA_COMWAKE state ... 283
5.12.6.2.1 State description ... 283
5.12.6.2.2 Transition SP16:SATA_COMWAKE to SP0:OOB_COMINIT ... 284
5.12.6.2.3 Transition SP16:SATA_COMWAKE to SP17:SATA_AwaitCOMWAKE ... 284
5.12.6.3 SP17:SATA_AwaitCOMWAKE state ... 284
5.12.6.3.1 State description ... 284
5.12.6.3.2 Transition SP17:SATA_AwaitCOMWAKE to SP0:OOB_COMINIT ... 284
5.12.6.3.3 Transition SP17:SATA_AwaitCOMWAKE to SP18:SATA_AwaitNoCOMWAKE ... 284
5.12.6.4 SP18:SATA_AwaitNoCOMWAKE state ... 284
5.12.6.4.1 State description ... 284
5.12.6.4.2 Transition SP18:SATA_AwaitNoCOMWAKE to SP0:OOB_COMINIT ... 284
5.12.6.4.3 Transition SP18:SATA_AwaitNoCOMWAKE to SP19:SATA_AwaitALIGN ... 284
5.12.6.5 SP19:SATA_AwaitALIGN state ... 284
5.12.6.5.1 State description ... 284
5.12.6.5.2 Transition SP19:SATA_AwaitALIGN to SP0:OOB_COMINIT ... 284
5.12.6.5.3 Transition SP19:SATA_AwaitALIGN to SP20:SATA_AdjustSpeed ... 285
5.12.6.6 SP20:SATA_AdjustSpeed state ... 285

Documents
Document Sharing Hub
Full document details: BS ISO/IEC 14776-262:2017

5.12.6.6.1 State description ... 285
5.12.6.6.2 Transition SP20:SATA_AdjustSpeed to SP0:OOB_COMINIT ... 285
5.12.6.6.3 Transition SP20:SATA_AdjustSpeed to SP21:SATA_TransmitALIGN ... 285
5.12.6.7 SP21:SATA_TransmitALIGN state ... 285
5.12.6.7.1 State description ... 285
5.12.6.7.2 Transition SP21:SATA_TransmitALIGN to SP0:OOB_COMINIT ... 285
5.12.6.7.3 Transition SP21:SATA_TransmitALIGN to SP22:SATA_PHY_Ready ... 285
5.12.6.8 SP22:SATA_PHY_Ready state ... 286
5.12.6.8.1 State description ... 286
5.12.6.8.2 Transition SP22:SATA_PHY_Ready to SP0:OOB_COMINIT ... 286
5.12.6.8.3 Transition SP22:SATA_PHY_Ready to SP23:SATA_PM_Partial ... 286
5.12.6.8.4 Transition SP22:SATA_PHY_Ready to SP24:SATA_PM_Slumber ... 286
5.12.6.9 SP23:SATA_PM_Partial state ... 286
5.12.6.9.1 State description ... 286
5.12.6.9.2 Transition SP23:SATA_PM_Partial to SP0:OOB_COMINIT ... 286
5.12.6.9.3 Transition SP23:SATA_PM_Partial to SP16:SATA_COMWAKE ... 286
5.12.6.9.4 Transition SP23:SATA_PM_Partial to SP19:SATA_AwaitALIGN ... 287
5.12.6.10 SP24:SATA_PM_Slumber state ... 287
5.12.6.10.1 State description ... 287
5.12.6.10.2 Transition SP24:SATA_PM_Slumber to SP0:OOB_COMINIT ... 287
5.12.6.10.3 Transition SP24:SATA_PM_Slumber to SP16:SATA_COMWAKE ... 287
5.12.6.10.4 Transition SP24:SATA_PM_Slumber to SP19:SATA_AwaitALIGN ... 287
5.12.7 SATA port selector state SP25:SATA_PortSel ... 288
5.12.7.1 State description ... 288
5.12.7.2 Transition SP25:SATA_PortSel to SP1:OOB_AwaitCOMX ... 288
5.12.8 SATA spinup hold state SP26:SATA_SpinupHold ... 289
5.12.8.1 State description ... 289
5.12.8.2 Transition SP26:SATA_SpinupHold to SP0:OOB_COMINIT ... 289
5.13 SP_DWS (phy layer dword synchronization) state machine ... 289
5.13.1 SP_DWS state machine overview ... 289
5.13.2 SP_DWS receiver ... 291
5.13.3 SP_DWS0:AcquireSync state ... 292
5.13.3.1 State description ... 292
5.13.3.2 Transition SP_DWS0:AcquireSync to SP_DWS1:Valid1 ... 292
5.13.4 SP_DWS1:Valid1 state ... 292
5.13.4.1 State description ... 292
5.13.4.2 Transition SP_DWS1:Valid1 to SP_DWS0:AcquireSync ... 293
5.13.4.3 Transition SP_DWS1:Valid1 to SP_DWS2:Valid2 ... 293
5.13.5 SP_DWS2:Valid2 state ... 293
5.13.5.1 State description ... 293
5.13.5.2 Transition SP_DWS2:Valid2 to SP_DWS0:AcquireSync ... 293
5.13.5.3 Transition SP_DWS2:Valid2 to SP_DWS3:SyncAcquired ... 293
5.13.6 SP_DWS3:SyncAcquired state ... 293
5.13.6.1 State description ... 293
5.13.6.2 Transition SP_DWS3:SyncAcquired to SP_DWS0:AcquireSync ... 293
5.13.6.3 Transition SP_DWS3:SyncAcquired to SP_DWS4:Lost1 ... 293
5.13.7 SP_DWS4:Lost1 state ... 293
5.13.7.1 State description ... 293
5.13.7.2 Transition SP_DWS4:Lost1 to SP_DWS0:AcquireSync ... 293
5.13.7.3 Transition SP_DWS4:Lost1 to SP_DWS5:Lost1Recovered ... 294
5.13.7.4 Transition SP_DWS4:Lost1 to SP_DWS6:Lost2 ... 294
5.13.8 SP_DWS5:Lost1Recovered state ... 294
5.13.8.1 State description ... 294
5.13.8.2 Transition SP_DWS5:Lost1Recovered to SP_DWS0:AcquireSync ... 294
5.13.8.3 Transition SP_DWS5:Lost1Recovered to SP_DWS3:SyncAcquired ... 294
5.13.8.4 Transition SP_DWS5:Lost1Recovered to SP_DWS6:Lost2 ... 294
5.13.9 SP_DWS6:Lost2 state ... 294
5.13.9.1 State description ... 294

Documents
Document Sharing Hub
Full document details: BS ISO/IEC 14776-262:2017

5.13.9.2 Transition SP_DWS6:Lost2 to SP_DWS0:AcquireSync 294
5.13.9.3 Transition SP_DWS6:Lost2 to SP_DWS7:Lost2Recovered 294
5.13.9.4 Transition SP_DWS6:Lost2 to SP_DWS8:Lost3 294
5.13.10 SP_DWS7:Lost2Recovered state 294
5.13.10.1 State description 294
5.13.10.2 Transition SP_DWS7:Lost2Recovered to SP_DWS0:AcquireSync 295
5.13.10.3 Transition SP_DWS7:Lost2Recovered to SP_DWS4:Lost1 295
5.13.10.4 Transition SP_DWS7:Lost2Recovered to SP_DWS8:Lost3 295
5.13.11 SP_DWS8:Lost3 state 295
5.13.11.1 State description 295
5.13.11.2 Transition SP_DWS8:Lost3 to SP_DWS0:AcquireSync 295
5.13.11.3 Transition SP_DWS8:Lost3 to SP_DWS9:Lost3Recovered 295
5.13.12 SP_DWS9:Lost3Recovered state 295
5.13.12.1 State description 295
5.13.12.2 Transition SP_DWS9:Lost3Recovered to SP_DWS0:AcquireSync 295
5.13.12.3 Transition SP_DWS9:Lost3Recovered to SP_DWS6:Lost2 295
5.14 PTT (phy layer transmitter training) state machines 295
5.14.1 PTT state machines overview 295
5.14.2 SP transmitter additions for transmitter training 296
5.14.2.1 SP transmitter additions for transmitter training overview 296
5.14.2.2 TTIU transmit setup 296
5.14.2.3 No_equalization, reference_1, and reference_2 coefficient settings request 297
5.14.2.4 Coefficient limits 297
5.14.2.5 Coefficient request result of update complete 297
5.14.2.5.1 Coefficient request processing 297
5.14.2.5.2 Coefficient adjustment completes 297
5.14.2.5.3 No coefficient adjustment 298
5.14.2.6 Coefficient request result of maximum 298
5.14.2.6.1 Coefficient request processing 298
5.14.2.6.2 Coefficient adjustment completes 298
5.14.2.6.3 No coefficient adjustment 298
5.14.2.7 Coefficient request result of minimum 299
5.14.2.7.1 Coefficient request processing 299
5.14.2.7.2 Coefficient adjustment completes 299
5.14.2.7.3 No coefficient adjustment 299
5.14.3 SP receiver additions for transmitter training 299
5.14.4 PTT_T (phy layer transmitter training transmit pattern) state machine 300
5.14.4.1 PTT_T state machine overview 300
5.14.4.2 PTT_T0:Idle state 303
5.14.4.2.1 State description 303
5.14.4.2.2 Transition PTT_T0:Idle to PTT_T1:Initialize 303
5.14.4.3 PTT_T1:Initialize state 303
5.14.4.3.1 State description 303
5.14.4.3.2 Transition PTT_T1:Initialize to PTT_T0:Idle 303
5.14.4.3.3 Transition PTT_T1:Initialize to PTT_T2:Tx_Training 304
5.14.4.4 PTT_T2:Tx_Training state 304
5.14.4.4.1 State description 304
5.14.4.4.2 Entry conditions 304
5.14.4.4.3 Control word and status word mappings 304
5.14.4.4.4 Error message handling 305
5.14.4.4.5 Resetting attached phy's transmitter 306
5.14.4.4.6 Local phy's transmitter and attached phy's transmitter training completed 307
5.14.4.4.7 Transition PTT_T2:Tx_Training to PTT_T0:Idle 307
5.14.4.4.8 Transition PTT_T2:Tx_Training to PTT_T3:Local_Tx_Training 307
5.14.4.5 PTT_T3:Local_Tx_Training state 308
5.14.4.5.1 State description 308
5.14.4.5.2 Entry conditions 308
5.14.4.5.3 Status word mappings 308

Documents
Document Sharing Hub
Full document details: BS ISO/IEC 14776-262:2017

5.14.4.5.4 Local phy's transmitter and attached phy's transmitter training completed 308
5.14.4.5.5 Error message handling..... 308
5.14.4.5.6 Transition PTT_T3:Local_Tx_Training to PTT_T0:Idle..... 309
5.14.5 PTT_R (phy layer transmitter training receive pattern) state machine..... 309
5.14.5.1 PTT_R0:Idle state 311
5.14.5.1.1 State description 311
5.14.5.1.2 Transition PTT_R0:Idle to PTT_R1:Initialize 311
5.14.5.2 PTT_R1:Initialize state 311
5.14.5.2.1 State description 311
5.14.5.2.2 Transition PTT_R1:Initialize to PTT_R0:Idle 311
5.14.5.2.3 Transition PTT_R1:Initialize to PTT_R2:Receive_Train_Tx_Pattern 311
5.14.5.3 PTT_R2:Receive_Train_Tx_Pattern state 311
5.14.5.3.1 State description 311
5.14.5.3.2 Transition PTT_R2:Receive_Train_Tx_Pattern to PTT_R0:Idle..... 317
5.14.5.3.3 Transition PTT_R2:Receive_Train_Tx_Pattern to PTT_R1:Initialize 317
5.14.6 PTT_SC (phy layer transmitter training set transmitter coefficient) state machines 317
5.14.6.1 PTT_SC (phy layer transmitter training set transmitter coefficient) state machines overview 317
5.14.6.2 PTT_SC1 state machine overview 319
5.14.6.3 PTT_SC1_0:Idle state 319
5.14.6.3.1 State description 319
5.14.6.3.2 Transition PTT_SC1_0:Idle to PTT_SC1_1:Wait_Inc_Dec 319
5.14.6.4 PTT_SC1_1:Wait_Inc_Dec state 319
5.14.6.4.1 State description 319
5.14.6.4.2 Transition PTT_SC1_1:Wait_Inc_Dec to PTT_SC1_0:Idle 319
5.14.6.4.3 Transition PTT_SC1_1:Wait_Inc_Dec to PTT_SC1_2:Set_Coefficient..... 319
5.14.6.5 PTT_SC1_2:Set_Coefficient state 320
5.14.6.5.1 State description 320
5.14.6.5.2 Transition PTT_SC1_2:Set_Coefficient to PTT_SC1_0:Idle 320
5.14.6.5.3 Transition PTT_SC1_2:Set_Coefficient to PTT_SC1_3:Wait_Hold 321
5.14.6.6 PTT_SC1_3:Wait_Hold state 321
5.14.6.6.1 State description 321
5.14.6.6.2 Transition PTT_SC1_3:Wait_Hold to PTT_SC1_0:Idle 321
5.14.6.6.3 Transition PTT_SC1_3:Wait_Hold to PTT_SC1_1:Wait_Inc_Dec 321
5.14.7 PTT_SC2 (phy layer transmitter training set transmitter coefficient 2) state machine 321
5.14.8 PTT_SC3 (phy layer transmitter training set transmitter coefficient 3) state machine 321
5.14.9 PTT_GC (phy layer transmitter training get transmitter coefficient) state machines..... 322
5.14.9.1 PTT_GC (phy layer transmitter training get transmitter coefficient) state machines overview 322
5.14.9.2 PTT_GC1 state machine..... 323
5.14.9.3 PTT_GC1_0:Idle state..... 323
5.14.9.3.1 State description 323
5.14.9.3.2 Transition PTT_GC1_0:Idle to PTT_GC1_1:Get_Coefficient 324
5.14.9.4 PTT_GC1_1:Get_Coefficient state..... 324
5.14.9.4.1 State description 324
5.14.9.4.2 Transition PTT_GC1_1:Get_Coefficient to PTT_GC1_0:Idle 324
5.14.9.4.3 Transition PTT_GC1_1:Get_Coefficient to PTT_GC1_2:Wait_Restart 324
5.14.9.5 PTT_GC1_2:Wait_Restart state..... 324
5.14.9.5.1 State description 324
5.14.9.5.2 Transition PTT_GC1_2:Wait_Restart to PTT_GC1_0:Idle 325
5.14.10 PTT_GC2 (phy layer transmitter training get transmitter coefficient 2) state machine 325
5.14.11 PTT_GC3 (phy layer transmitter training get transmitter coefficient 3) state machine 325
5.14.12 PTT_PL (phy layer transmitter training pattern lock) state machine 325
5.14.12.1 PTT_PL state machine overview..... 325
5.14.12.2 PTT_PL0:Idle state..... 327
5.14.12.2.1 State description 327
5.14.12.2.2 Transition PTT_PL0:Idle to PTT_PL1:Acquire_Lock 328
5.14.12.3 PTT_PL1:Acquire_Lock state..... 328
5.14.12.3.1 State description 328
5.14.12.3.2 Transition PTT_PL1:Acquire_Lock to PTT_PL2:Valid 328

Documents
Document Sharing Hub
Full document details: BS ISO/IEC 14776-262:2017

5.14.12.4 PTT_PL2:Valid state ... 328
5.14.12.4.1 State description ... 328
5.14.12.4.2 Transition PTT_PL2:Valid to PTT_PL1:Acquire_Lock ... 328
5.14.12.4.3 Transition PTT_PL2:Valid to PTT_PL3:Lock_Acquired ... 328
5.14.12.5 PTT_PL3:Lock_Acquired state ... 328
5.14.12.5.1 State description ... 328
5.14.12.5.2 Transition PTT_PL3:Lock_Acquired to PTT_PL4:Lost1 ... 328
5.14.12.6 PTT_PL4:Lost1 state ... 328
5.14.12.6.1 State description ... 328
5.14.12.6.2 Transition PTT_PL4:Lost1 to PTT_PL3:Lock_Acquired ... 329
5.14.12.6.3 Transition PTT_PL4:Lost1 to PTT_PL5:Lost2 ... 329
5.14.12.7 PTT_PL5:Lost2 state ... 329
5.14.12.7.1 State description ... 329
5.14.12.7.2 Transition PTT_PL5:Lost2 to PTT_PL3:Lock_Acquired ... 329
5.14.12.7.3 Transition PTT_PL5:Lost2 to PTT_PL6:Lost3 ... 329
5.14.12.8 PTT_PL6:Lost3 state ... 329
5.14.12.8.1 State description ... 329
5.14.12.8.2 Transition PTT_PL6:Lost3 to PTT_PL3:Lock_Acquired ... 329
5.14.12.8.3 Transition PTT_PL6:Lost3 to PTT_PL7:Lost4 ... 329
5.14.12.9 PTT_PL7:Lost4 state ... 329
5.14.12.9.1 State description ... 329
5.14.12.9.2 Transition PTT_PL7:Lost4 to PTT_PL3:Lock_Acquired ... 329
5.14.12.9.3 Transition PTT_PL7:Lost4 to PTT_PL1:Acquire_Lock ... 330
5.15 Multiplexing ... 330
5.16 Spinup ... 331

6 Link layer ... 332
6.1 Link layer overview ... 332
6.2 Primitives ... 332
6.2.1 Primitives overview ... 332
6.2.2 Primitive summary ... 333
6.2.3 Primitive encodings ... 338
6.2.4 Primitive sequences ... 343
6.2.4.1 Primitive sequences overview ... 343
6.2.4.2 Single primitive sequence ... 343
6.2.4.3 Repeated primitive sequence ... 343
6.2.4.4 Continued primitive sequence ... 344
6.2.4.5 Extended primitive sequence ... 344
6.2.4.6 Triple primitive sequence ... 345
6.2.4.7 Redundant primitive sequence ... 346
6.2.5 Deletable primitives ... 347
6.2.5.1 ALIGN ... 347
6.2.5.2 MUX (Multiplex) ... 348
6.2.5.3 NOTIFY ... 349
6.2.5.3.1 NOTIFY overview ... 349
6.2.5.3.2 NOTIFY (ENABLE SPINUP) ... 349
6.2.5.3.3 NOTIFY (POWER LOSS EXPECTED) ... 350
6.2.5.4 OOB_IDLE ... 351
6.2.6 Primitives not specific to type of connections ... 351
6.2.6.1 AIP (Arbitration in progress) ... 351
6.2.6.2 BREAK ... 351
6.2.6.3 BREAK_REPLY ... 351
6.2.6.4 BROADCAST ... 352
6.2.6.5 CLOSE ... 352
6.2.6.6 EOAF (End of address frame) ... 352
6.2.6.7 ERROR ... 353
6.2.6.8 HARD_RESET ... 353
6.2.6.9 OPEN_ACCEPT ... 353

Documents
Document Sharing Hub
Full document details: BS ISO/IEC 14776-262:2017

6.2.6.10 OPEN_REJECT ... 353
6.2.6.11 PS_ACK ... 356
6.2.6.12 PS_NAK ... 356
6.2.6.13 PS_REQ ... 356
6.2.6.14 PWR_ACK ... 356
6.2.6.15 PWR_DONE ... 356
6.2.6.16 PWR_GRANT ... 356
6.2.6.17 PWR_REQ ... 356
6.2.6.18 SOAF (Start of address frame) ... 356
6.2.6.19 TRAIN ... 357
6.2.6.20 TRAIN_DONE ... 357
6.2.7 Primitives used only inside SSP and SMP connections ... 357
6.2.7.1 ACK (Acknowledge) ... 357
6.2.7.2 CREDIT_BLOCKED ... 357
6.2.7.3 DONE ... 357
6.2.7.4 EOF (End of frame) ... 358
6.2.7.5 NAK (Negative acknowledgement) ... 358
6.2.7.6 RRDY (Receiver ready) ... 358
6.2.7.7 SOF (Start of frame) ... 358
6.2.8 Primitives used only inside STP connections and on SATA physical links ... 358
6.2.8.1 SATA_ERROR ... 358
6.2.8.2 SATA_PMACK, SATA_PMNAK, SATA_PMREQ_P, and SATA_PMREQ_S (Power management acknowledgements and requests) ... 359
6.2.8.3 SATA_HOLD and SATA_HOLDA (Hold and hold acknowledge) ... 359
6.2.8.4 SATA_R_RDY and SATA_X_RDY (Receiver ready and transmitter ready) ... 359
6.2.8.5 Other primitives used inside STP connections and on SATA physical links ... 359
6.3 Physical link rate tolerance management ... 359
6.3.1 Physical link rate tolerance management overview ... 359
6.3.2 Phys originating dwords ... 360
6.3.3 Expander phys forwarding dwords ... 361
6.4 Idle physical links ... 362
6.5 CRC ... 362
6.5.1 CRC overview ... 362
6.5.2 CRC generation ... 364
6.5.3 CRC checking ... 366
6.6 Scrambling ... 367
6.7 Bit order of CRC and scrambler ... 369
6.8 Address frames ... 372
6.8.1 Address frames overview ... 372
6.8.2 IDENTIFY address frame ... 374
6.8.3 OPEN address frame ... 378
6.9 Link reset sequence ... 381
6.9.1 Link reset sequence overview ... 381
6.9.2 Expander device handling of link reset sequences ... 384
6.10 SL_IR (link layer identification and hard reset) state machines ... 384
6.10.1 SL_IR state machines overview ... 384
6.10.2 SL_IR transmitter and receiver ... 386
6.10.3 SL_IR_TIR (transmit IDENTIFY or HARD_RESET) state machine ... 386
6.10.3.1 SL_IR_TIR state machine overview ... 386
6.10.3.2 SL_IR_TIR1:Idle state ... 387
6.10.3.2.1 State description ... 387
6.10.3.2.2 Transition SL_IR_TIR1:Idle to SL_IR_TIR2:Transmit_Identify ... 387
6.10.3.2.3 Transition SL_IR_TIR1:Idle to SL_IR_TIR3:Transmit_Hard_Reset ... 387
6.10.3.3 SL_IR_TIR2:Transmit_Identify state ... 387
6.10.3.3.1 State description ... 387
6.10.3.3.2 Transition SL_IR_TIR2:Transmit_Identify to SL_IR_TIR4:Completed ... 387
6.10.3.4 SL_IR_TIR3:Transmit_Hard_Reset state ... 387
6.10.3.4.1 State description ... 387

Documents
Document Sharing Hub
Full document details: BS ISO/IEC 14776-262:2017

6.10.3.4.2 Transition SL_IR_TIR3:Transmit_Hard_Reset to SL_IR_TIR4:Completed 387
6.10.3.5 SL_IR_TIR4:Completed state 387
6.10.4 SL_IR_RIF (receive IDENTIFY address frame) state machine 388
6.10.4.1 SL_IR_RIF state machine overview 388
6.10.4.2 SL_IR_RIF1:Idle state 388
6.10.4.2.1 State description 388
6.10.4.2.2 Transition SL_IR_RIF1:Idle to SL_IR_RIF2:Receive_Identify_Frame 388
6.10.4.3 SL_IR_RIF2:Receive_Identify_Frame state 388
6.10.4.3.1 State description 388
6.10.4.3.2 Transition SL_IR_RIF2:Receive_Identify_Frame to SL_IR_RIF3:Completed 389
6.10.4.4 SL_IR_RIF3:Completed state 389
6.10.5 SL_IR_IRC (identification and hard reset control) state machine 389
6.10.5.1 SL_IR_IRC state machine overview 389
6.10.5.2 SL_IR_IRC1:Idle state 389
6.10.5.2.1 State description 389
6.10.5.2.2 Transition SL_IR_IRC1:Idle to SL_IR_IRC2:Wait 389
6.10.5.3 SL_IR_IRC2:Wait state 389
6.10.5.3.1 State description 389
6.10.5.3.2 Transition SL_IR_IRC2:Wait to SL_IR_IRC3:Completed 390
6.10.5.4 SL_IR_IRC3:Completed state 390
6.11 Entering a low phy power condition 390
6.12 Power control and SL_P (link layer power control) state machines 391
6.12.1 Power source device 391
6.12.2 Power consumer device 391
6.12.3 NOTIFY (ENABLE SPINUP) usage 392
6.12.4 SL_P_S (link layer power source device) state machine 392
6.12.4.1 SL_P_S state machine overview 392
6.12.4.2 SL_P_S transmitter and SL_P_S receiver 394
6.12.4.3 SL_P_S_1:Idle state 395
6.12.4.3.1 State description 395
6.12.4.3.2 Transition SL_P_S_1:Idle to SL_P_S_2:Wait_Grant 395
6.12.4.4 SL_P_S_2:Wait_Grant state 395
6.12.4.4.1 State description 395
6.12.4.4.2 Transition SL_P_S_2:Wait_Grant to SL_P_S_1:Idle 396
6.12.4.4.3 Transition SL_P_S_2:Wait_Grant to SL_P_S_3:Wait_Done 396
6.12.4.5 SL_P_S_3:Wait_Done state 396
6.12.4.5.1 State description 396
6.12.4.5.2 Transition SL_P_S_3:Wait_Done to SL_P_S_1:Idle 396
6.12.5 SL_P_C (link layer power consumer device) state machine 396
6.12.5.1 SL_P_C state machine overview 396
6.12.5.2 SL_P_C receiver 399
6.12.5.3 SL_P_C_1:Idle state 399
6.12.5.3.1 State description 399
6.12.5.3.2 Transition SL_P_C_1:Idle to SL_P_C_2:Request_Power 399
6.12.5.4 SL_P_C_2:Request_Power state 399
6.12.5.4.1 State description 399
6.12.5.4.2 Transition SL_P_C_2:Request_Power to SL_P_C_1:Idle 400
6.12.5.4.3 Transition SL_P_C_2:Request_Power to SL_P_C_3:Wait_Grant 400
6.12.5.4.4 Transition SL_P_C_2:Request_Power to SL_P_C_4:Wait_Done 400
6.12.5.5 SL_P_C_3:Wait_Grant state 400
6.12.5.5.1 State description 400
6.12.5.5.2 Transition SL_P_C_3:Wait_Grant to SL_P_C_1:Idle 400
6.12.5.5.3 Transition SL_P_C_3:Wait_Grant to SL_P_C_4:Wait_Done 401
6.12.5.6 SL_P_C_4:Wait_Done state 401
6.12.5.6.1 State description 401
6.12.5.6.2 Transition SL_P_C_4:Wait_Done to SL_P_C_1:Idle 401
6.13 SAS domain changes (Broadcast (Change) usage) 401
6.14 Connections 402

Documents
Document Sharing Hub
Full document details: BS ISO/IEC 14776-262:2017

6.14.1 Connections overview ... 402
6.14.2 Opening a connection ... 403
6.14.2.1 Connection request ... 403
6.14.2.2 Results of a connection request ... 405
6.14.3 Arbitration fairness ... 405
6.14.4 Arbitration inside an expander device ... 406
6.14.4.1 Expander logical phy arbitration requirements ... 406
6.14.4.2 ECM arbitration requirements ... 407
6.14.4.2.1 ECM arbitration requirements overview ... 407
6.14.4.2.2 Arbitrating confirmations ... 407
6.14.4.2.3 Arb Won confirmation ... 408
6.14.4.2.4 Arb Lost confirmation ... 409
6.14.4.2.5 Arb Reject confirmation ... 409
6.14.4.3 Arbitration status ... 409
6.14.4.4 Partial Pathway Timeout timer ... 410
6.14.4.5 Pathway recovery ... 410
6.14.5 BREAK handling ... 411
6.14.6 Aborting a connection request ... 411
6.14.7 Closing a connection ... 414
6.14.8 Breaking a connection ... 415
6.15 Rate matching ... 416
6.16 SL (link layer for SAS logical phys) state machines ... 419
6.16.1 SL state machines overview ... 419
6.16.2 SL transmitter and receiver ... 422
6.16.3 SL_RA (receive OPEN address frame) state machine ... 424
6.16.4 SL_CC (connection control) state machine ... 424
6.16.4.1 SL_CC state machine overview ... 424
6.16.4.2 SL_CC0:Idle state ... 426
6.16.4.2.1 State description ... 426
6.16.4.2.2 Transition SL_CC0:Idle to SL_CC1:ArbSel ... 427
6.16.4.2.3 Transition SL_CC0:Idle to SL_CC2:Selected ... 428
6.16.4.2.4 Transition SL_CC0:Idle to SL_CC8:PS_Request ... 428
6.16.4.2.5 Transition SL_CC0:Idle to SL_CC9:PS_Quiet ... 428
6.16.4.3 SL_CC1:ArbSel state ... 428
6.16.4.3.1 State description ... 428
6.16.4.3.2 Transition SL_CC1:ArbSel to SL_CC0:Idle ... 430
6.16.4.3.3 Transition SL_CC1:ArbSel to SL_CC2:Selected ... 430
6.16.4.3.4 Transition SL_CC1:ArbSel to SL_CC3:Connected ... 430
6.16.4.3.5 Transition SL_CC1:ArbSel to SL_CC5:BreakWait ... 431
6.16.4.3.6 Transition SL_CC1:ArbSel to SL_CC6:Break ... 431
6.16.4.4 SL_CC2:Selected state ... 431
6.16.4.4.1 State description ... 431
6.16.4.4.2 Transition SL_CC2:Selected to SL_CC0:Idle ... 432
6.16.4.4.3 Transition SL_CC2:Selected to SL_CC3:Connected ... 432
6.16.4.4.4 Transition SL_CC2:Selected to SL_CC5:BreakWait ... 432
6.16.4.4.5 Transition SL_CC2:Selected to SL_CC6:Break ... 432
6.16.4.5 SL_CC3:Connected state ... 432
6.16.4.5.1 State description ... 432
6.16.4.5.2 Transition SL_CC3:Connected to SL_CC4:DisconnectWait ... 433
6.16.4.5.3 Transition SL_CC3:Connected to SL_CC5:BreakWait ... 433
6.16.4.5.4 Transition SL_CC3:Connected to SL_CC6:Break ... 433
6.16.4.5.5 Transition SL_CC3:Connected to SL_CC7:CloseSTP ... 433
6.16.4.6 SL_CC4:DisconnectWait state ... 433
6.16.4.6.1 State description ... 433
6.16.4.6.2 Transition SL_CC4:DisconnectWait to SL_CC0:Idle ... 434
6.16.4.6.3 Transition SL_CC4:DisconnectWait to SL_CC5:BreakWait ... 434
6.16.4.6.4 Transition SL_CC4:DisconnectWait to SL_CC6:Break ... 434
6.16.4.7 SL_CC5:BreakWait state ... 434

Documents
Document Sharing Hub
Full document details: BS ISO/IEC 14776-262:2017

6.16.4.7.1 State description ... 434
6.16.4.7.2 Transition SL_CC5:BreakWait to SL_CC0:Idle ... 434
6.16.4.8 SL_CC6:Break state ... 434
6.16.4.8.1 State description ... 434
6.16.4.8.2 Transition SL_CC6:Break to SL_CC0:Idle ... 435
6.16.4.9 SL_CC7:CloseSTP state ... 435
6.16.4.9.1 State description ... 435
6.16.4.9.2 Transition SL_CC7:CloseSTP to SL_CC0:Idle ... 435
6.16.4.10 SL_CC8:PS_Request state ... 435
6.16.4.10.1 State description ... 435
6.16.4.10.2 Transition SL_CC8:PS_Request to SL_CC9:PS_Quiet ... 436
6.16.4.10.3 Transition SL_CC8:PS_Request to SL_CC0:Idle ... 436
6.16.4.10.4 Transition SL_CC8:PS_Request to SL_CC2:Selected ... 436
6.16.4.11 SL_CC9:PS_Quiet state ... 436
6.16.4.11.1 State description ... 436
6.16.4.11.2 Transition SL_CC9:PS_Quiet to SL_CC0:Idle ... 437
6.16.4.11.3 Transition SL_CC9:PS_Quiet to SL_CC1:ArbSel ... 437
6.17 XL (link layer for expander logical phys) state machine ... 437
6.17.1 XL state machine overview ... 437
6.17.2 XL transmitter and receiver ... 443
6.17.3 XL0:Idle state ... 444
6.17.3.1 State description ... 444
6.17.3.2 Transition XL0:Idle to XL1:Request_Path ... 445
6.17.3.3 Transition XL0:Idle to XL5:Forward_Open ... 446
6.17.3.3.1 Transition XL0:Idle to XL11:PS_Request ... 446
6.17.3.3.2 Transition XL0:Idle to XL12:PS_Quiet ... 446
6.17.4 XL1:Request_Path state ... 446
6.17.4.1 State description ... 446
6.17.4.2 Transition XL1:Request_Path to XL0:Idle ... 447
6.17.4.3 Transition XL1:Request_Path to XL2:Request_Open ... 447
6.17.4.4 Transition XL1:Request_Path to XL4:Open_Reject ... 447
6.17.4.5 Transition XL1:Request_Path to XL5:Forward_Open ... 448
6.17.4.6 Transition XL1:Request_Path to XL9:Break ... 448
6.17.5 XL2:Request_Open state ... 448
6.17.5.1 State description ... 448
6.17.5.2 Transition XL2:Request_Open to XL3:Open_Confirm_Wait ... 448
6.17.6 XL3:Open_Confirm_Wait state ... 449
6.17.6.1 State description ... 449
6.17.6.2 Transition XL3:Open_Confirm_Wait to XL0:Idle ... 449
6.17.6.3 Transition XL3:Open_Confirm_Wait to XL1:Request_Path ... 449
6.17.6.4 Transition XL3:Open_Confirm_Wait to XL5:Forward_Open ... 450
6.17.6.5 Transition XL3:Open_Confirm_Wait to XL7:Connected ... 450
6.17.6.6 Transition XL3:Open_Confirm_Wait to XL9:Break ... 450
6.17.6.7 Transition XL3:Open_Confirm_Wait to XL10:Break_Wait ... 450
6.17.7 XL4:Open_Reject state ... 450
6.17.7.1 State description ... 450
6.17.7.2 Transition XL4:Open_Reject to XL0:Idle ... 450
6.17.7.3 Transition XL4:Open_Reject to XL5:Forward_Open ... 450
6.17.8 XL5:Forward_Open state ... 451
6.17.8.1 State description ... 451
6.17.8.2 Transition XL5:Forward_Open to XL6:Open_Response_Wait ... 451
6.17.9 XL6:Open_Response_Wait state ... 451
6.17.9.1 State description ... 451
6.17.9.2 Transition XL6:Open_Response_Wait to XL0:Idle ... 452
6.17.9.3 Transition XL6:Open_Response_Wait to XL1:Request_Path ... 452
6.17.9.4 Transition XL6:Open_Response_Wait to XL2:Request_Open ... 452
6.17.9.5 Transition XL6:Open_Response_Wait to XL7:Connected ... 452
6.17.9.6 Transition XL6:Open_Response_Wait to XL9:Break ... 452

Documents
Document Sharing Hub
Full document details: BS ISO/IEC 14776-262:2017

6.17.9.7 Transition XL6:Open_Response_Wait to XL10:Break_Wait ... 453
6.17.10 XL7:Connected state ... 453
6.17.10.1 State description ... 453
6.17.10.2 Transition XL7:Connected to XL8:Close_Wait ... 453
6.17.10.3 Transition XL7:Connected to XL9:Break ... 453
6.17.10.4 Transition XL7:Connected to XL10:Break_Wait ... 453
6.17.11 XL8:Close_Wait state ... 454
6.17.11.1 State description ... 454
6.17.11.2 Transition XL8:Close_Wait to XL0:Idle ... 454
6.17.11.3 Transition XL8:Close_Wait to XL9:Break ... 454
6.17.11.4 Transition XL8:Close_Wait to XL10:Break_Wait ... 454
6.17.12 XL9:Break state ... 455
6.17.12.1 State description ... 455
6.17.12.2 Transition XL9:Break to XL0:Idle ... 455
6.17.13 XL10:Break_Wait state ... 455
6.17.13.1 State description ... 455
6.17.13.2 Transition XL10:Break_Wait to XL0:Idle ... 455
6.17.14 XL11:PS_Request state ... 455
6.17.14.1 State description ... 455
6.17.14.2 Transition XL11:PS_Request to XL12:PS_Quiet ... 456
6.17.14.3 Transition XL11:PS_Request to XL0:Idle ... 456
6.17.14.4 Transition XL11:PS_Request to XL1:Request_Path ... 456
6.17.15 XL12:PS_Quiet state ... 456
6.17.15.1 State description ... 456
6.17.15.2 Transition XL12:PS_Quiet to XL0:Idle ... 457
6.18 SSP link layer ... 457
6.18.1 Opening an SSP connection ... 457
6.18.2 Full duplex ... 457
6.18.3 SSP frame transmission and reception ... 458
6.18.4 SSP flow control ... 458
6.18.5 Interlocked frames ... 459
6.18.6 Breaking an SSP connection ... 461
6.18.7 Closing an SSP connection ... 461
6.18.8 SSP (link layer for SSP phys) state machines ... 462
6.18.8.1 SSP state machines overview ... 462
6.18.8.2 SSP transmitter and receiver ... 465
6.18.8.3 SSP_TIM (transmit interlocked frame monitor) state machine ... 466
6.18.8.4 SSP_TCM (transmit frame credit monitor) state machine ... 467
6.18.8.5 SSP_D (DONE control) state machine ... 467
6.18.8.6 SSP_TF (transmit frame control) state machine ... 468
6.18.8.6.1 SSP_TF state machine overview ... 468
6.18.8.6.2 SSP_TF1:Connected_Idle state ... 469
6.18.8.6.2.1 State description ... 469
6.18.8.6.2.2 Transition SSP_TF1:Connected_Idle to SSP_TF2:Tx_Wait ... 469
6.18.8.6.2.3 Transition SSP_TF1:Connected_Idle to SSP_TF4:Transmit_DONE ... 469
6.18.8.6.3 SSP_TF2:Tx_Wait state ... 469
6.18.8.6.3.1 State description ... 469
6.18.8.6.3.2 Transition SSP_TF2:Tx_Wait to SSP_TF3:Transmit_Frame ... 469
6.18.8.6.3.3 Transition SSP_TF2:Tx_Wait to SSP_TF4:Transmit_DONE ... 469
6.18.8.6.4 SSP_TF3:Transmit_Frame state ... 470
6.18.8.6.4.1 State description ... 470
6.18.8.6.4.2 Transition SSP_TF3:Transmit_Frame to SSP_TF1:Connected_Idle ... 470
6.18.8.6.5 SSP_TF4:Transmit_DONE state ... 470
6.18.8.7 SSP_RF (receive frame control) state machine ... 471
6.18.8.8 SSP_RCM (receive frame credit monitor) state machine ... 471
6.18.8.9 SSP_RIM (receive interlocked frame monitor) state machine ... 472
6.18.8.10 SSP_TC (transmit credit control) state machine ... 472
6.18.8.11 SSP_TAN (transmit ACK/NAK control) state machine ... 473

Documents
Document Sharing Hub
Full document details: BS ISO/IEC 14776-262:2017

6.19 STP link layer ... 473
6.19.1 STP frame transmission and reception ... 473
6.19.2 STP flow control ... 474
6.19.2.1 STP flow control overview ... 474
6.19.2.2 SATA frame buffering ... 474
6.19.2.3 STP flow control buffer size ... 475
6.19.2.4 STP flow control example ... 476
6.19.2.5 STP insufficient buffer support ... 478
6.19.3 Continued primitive sequence ... 478
6.19.4 Affiliations ... 479
6.19.5 Opening an STP connection ... 481
6.19.6 Closing an STP connection ... 483
6.19.7 STP connection management examples ... 483
6.19.8 STP (link layer for STP phys) state machines ... 486
6.19.9 SMP target port support ... 486
6.20 SMP link layer ... 486
6.20.1 SMP frame transmission and reception ... 486
6.20.2 SMP flow control ... 486
6.20.3 Opening an SMP connection ... 486
6.20.4 Closing an SMP connection ... 486
6.20.5 SMP (link layer for SMP phys) state machines ... 487
6.20.5.1 SMP state machines overview ... 487
6.20.5.2 SMP transmitter and receiver ... 487
6.20.5.3 SMP_IP (link layer for SMP initiator phys) state machine ... 487
6.20.5.3.1 SMP_IP state machine overview ... 487
6.20.5.3.2 SMP_IP1:Idle state ... 488
6.20.5.3.2.1 State description ... 488
6.20.5.3.2.2 Transition SMP_IP1:Idle to SMP_IP2:Transmit_Frame ... 488
6.20.5.3.3 SMP_IP2:Transmit_Frame state ... 489
6.20.5.3.3.1 State description ... 489
6.20.5.3.3.2 Transition SMP_IP2:Transmit_Frame to SMP_IP3:Receive_Frame ... 489
6.20.5.3.4 SMP_IP3:Receive_Frame state ... 489
6.20.5.4 SMP_TP (link layer for SMP target phys) state machine ... 490
6.20.5.4.1 SMP_TP state machine overview ... 490
6.20.5.4.2 SMP_TP1:Receive_Frame state ... 490
6.20.5.4.2.1 State description ... 490
6.20.5.4.2.2 Transition SMP_TP1:Receive_Frame to SMP_TP2:Transmit_Frame ... 491
6.20.5.4.3 SMP_TP2:Transmit_Frame state ... 491

7 Port layer ... 492
7.1 Port layer overview ... 492
7.2 PL (port layer) state machines ... 492
7.2.1 PL state machines overview ... 492
7.2.2 PL_OC (port layer overall control) state machine ... 494
7.2.2.1 PL_OC state machine overview ... 494
7.2.2.2 PL_OC1:Idle state ... 496
7.2.2.2.1 PL_OC1:Idle state description ... 496
7.2.2.2.2 Transition PL_OC1:Idle to PL_OC2:Overall_Control ... 497
7.2.2.3 PL_OC2:Overall_Control state ... 497
7.2.2.3.1 PL_OC2:Overall_Control state overview ... 497
7.2.2.3.2 PL_OC2:Overall_Control state establishing connections ... 498
7.2.2.3.3 PL_OC2:Overall_Control state connection established ... 501
7.2.2.3.4 PL_OC2:Overall_Control state unable to establish a connection — Unable To Connect message ... 502
7.2.2.3.5 PL_OC2:Overall_Control state unable to establish a connection — Unable To Connect message - Retry Open message processed as an Unable To Connect message ... 502
7.2.2.3.6 PL_OC2:Overall_Control state unable to establish a connection — I_T Nexus Loss timer expires ... 502

Documents
Document Sharing Hub
Full document details: BS ISO/IEC 14776-262:2017

7.2.2.3.7 PL_OC2:Overall_Control state - I_T nexus loss ... 502
7.2.2.3.8 PL_OC2:Overall_Control state connection management ... 503
7.2.2.3.9 PL_OC2:Overall_Control state frame transmission ... 503
7.2.2.3.10 PL_OC2:Overall_Control state frame transmission cancellations ... 505
7.2.2.3.11 Transition PL_OC2:Overall_Control to PL_OC1:Idle ... 505
7.2.3 PL_PM (port layer phy manager) state machine ... 505
7.2.3.1 PL_PM state machine overview ... 505
7.2.3.2 PL_PM1:Idle state ... 508
7.2.3.2.1 PL_PM1:Idle state description ... 508
7.2.3.2.2 Transition PL_PM1:Idle to PL_PM2:Req_Wait ... 509
7.2.3.2.3 Transition PL_PM1:Idle to PL_PM3:Connected ... 509
7.2.3.3 PL_PM2:Req_Wait state ... 509
7.2.3.3.1 PL_PM2:Req_Wait state overview ... 509
7.2.3.3.2 PL_PM2:Req_Wait establishing a connection ... 509
7.2.3.3.3 PL_PM2:Req_Wait connection established ... 509
7.2.3.3.4 PL_PM2:Req_Wait unable to establish a connection ... 510
7.2.3.3.5 PL_PM2:Req_Wait connection management ... 511
7.2.3.3.6 Transition PL_PM2:Req_Wait to PL_PM1:Idle ... 511
7.2.3.3.7 Transition PL_PM2:Req_Wait to PL_PM3:Connected ... 511
7.2.3.3.8 Transition PL_PM2:Req_Wait to PL_PM4:Wait_For_Close ... 511
7.2.3.4 PL_PM3:Connected state ... 511
7.2.3.4.1 PL_PM3:Connected state description ... 511
7.2.3.4.2 Transition PL_PM3:Connected to PL_PM1:Idle ... 514
7.2.3.5 PL_PM4:Wait_For_Close state ... 514
7.2.3.5.1 PL_PM4:Wait_For_Close state description ... 514
7.2.3.5.2 Transition PL_PM4:Wait_For_Close to PL_PM1:Idle ... 515

8 Transport layer ... 516
8.1 Transport layer overview ... 516
8.2 SSP transport layer ... 517
8.2.1 SSP frame format ... 517
8.2.2 Information units ... 521
8.2.2.1 COMMAND frame - Command information unit ... 521
8.2.2.2 TASK frame - Task Management Function information unit ... 522
8.2.2.3 XFER_RDY frame - Transfer Ready information unit ... 525
8.2.2.4 DATA frame - Data information unit ... 526
8.2.2.5 RESPONSE frame - Response information unit ... 528
8.2.2.5.1 RESPONSE frame - Response information unit overview ... 528
8.2.2.5.2 Response information unit - NO_DATA format ... 530
8.2.2.5.3 Response information unit - RESPONSE_DATA format ... 530
8.2.2.5.4 Response information unit - SENSE_DATA format ... 531
8.2.3 Sequences of SSP frames ... 532
8.2.3.1 Sequences of SSP frames overview ... 532
8.2.3.2 Task management function sequence of SSP frames ... 532
8.2.3.3 Non-data command sequence of SSP frames ... 533
8.2.3.4 Write command sequence of SSP frames ... 533
8.2.3.5 Read command sequence of SSP frames ... 534
8.2.3.6 Bidirectional command sequence of SSP frames ... 535
8.2.4 SSP transport layer handling of link layer errors ... 535
8.2.4.1 SSP transport layer handling of link layer errors overview ... 535
8.2.4.2 COMMAND frame - handling of link layer errors ... 536
8.2.4.3 TASK frame - handling of link layer errors ... 536
8.2.4.4 XFER_RDY frame - handling of link layer errors ... 537
8.2.4.4.1 XFER_RDY frame overview ... 537
8.2.4.4.2 XFER_RDY frame with transport layer retries enabled ... 537
8.2.4.4.3 XFER_RDY frame with transport layer retries disabled ... 538
8.2.4.5 Read DATA frame - handling of link layer errors ... 538
8.2.4.5.1 Read DATA frame overview ... 538

Documents
Document Sharing Hub
Full document details: BS ISO/IEC 14776-262:2017

8.2.4.5.2 Read DATA frame with transport layer retries enabled ... 538
8.2.4.5.3 Read DATA frame with transport layer retries disabled ... 538
8.2.4.6 Write DATA frame - handling of link layer errors ... 539
8.2.4.6.1 Write DATA frame overview ... 539
8.2.4.6.2 Write DATA frame with transport layer retries enabled ... 539
8.2.4.6.3 Write DATA frame with transport layer retries disabled ... 539
8.2.4.7 RESPONSE frame - handling of link layer errors ... 540
8.2.5 SSP transport layer error handling summary ... 540
8.2.5.1 SSP transport layer error handling summary introduction ... 540
8.2.5.2 SSP initiator port transport layer error handling summary ... 540
8.2.5.3 SSP target port transport layer error handling summary ... 541
8.2.6 ST (transport layer for SSP ports) state machines ... 542
8.2.6.1 ST state machines overview ... 542
8.2.6.2 ST_I (transport layer for SSP initiator ports) state machines ... 542
8.2.6.2.1 ST_I state machines overview ... 542
8.2.6.2.2 ST_IFR (initiator frame router) state machine ... 544
8.2.6.2.2.1 ST_IFR state machine overview ... 544
8.2.6.2.2.2 Processing transport protocol service requests ... 544
8.2.6.2.2.3 Processing Frame Received confirmations ... 545
8.2.6.2.2.4 Processing Transmission Complete and Reception Complete messages ... 546
8.2.6.2.2.5 Processing miscellaneous requests ... 547
8.2.6.2.3 ST_ITS (initiator transport server) state machine ... 548
8.2.6.2.3.1 ST_ITS state machine overview ... 548
8.2.6.2.3.2 ST_ITS1:Initiator_Start state ... 549
8.2.6.2.3.2.1 State description ... 549
8.2.6.2.3.2.2 Transition ST_ITS1:Initiator_Start to ST_ITS3:Prepare_Command ... 549
8.2.6.2.3.2.3 Transition ST_ITS1:Initiator_Start to ST_ITS4:Prepare_Task ... 549
8.2.6.2.3.3 ST_ITS2:Initiator_Send_Frame state ... 549
8.2.6.2.3.3.1 Transition ST_ITS2:Initiator_Send_Frame to ST_ITS1:Initiator_Start ... 553
8.2.6.2.3.3.2 Transition ST_ITS2:Initiator_Send_Frame to ST_ITS5:Prepare_Data_Out ... 553
8.2.6.2.3.3.3 Transition ST_ITS2:Initiator_Send_Frame to ST_ITS6:Process_Data_In ... 553
8.2.6.2.3.4 ST_ITS3:Prepare_Command state ... 554
8.2.6.2.3.4.1 State description ... 554
8.2.6.2.3.4.2 Transition ST_ITS3:Prepare_Command to ST_ITS2:Initiator_Send_Frame ... 554
8.2.6.2.3.5 ST_ITS4:Prepare_Task state ... 554
8.2.6.2.3.5.1 State description ... 554
8.2.6.2.3.5.2 Transition ST_ITS4:Prepare_Task to ST_ITS2:Initiator_Send_Frame ... 555
8.2.6.2.3.6 ST_ITS5:Prepare_Data_Out state ... 555
8.2.6.2.3.6.1 State description ... 555
8.2.6.2.3.6.2 Transition ST_ITS5:Prepare_Data_Out to ST_ITS2:Intiator_Send_Frame ... 556
8.2.6.2.3.7 ST_ITS6:Receive_Data_In state ... 556
8.2.6.2.3.7.1 State description ... 556
8.2.6.2.3.7.2 Transition ST_ITS6:Receive_Data_In to ST_ITS1:Initiator_Start ... 557
8.2.6.2.3.7.3 Transition ST_ITS6:Receve_Data_In to ST_ITS2:Initiator_Send_Frame ... 557
8.2.6.3 ST_T (transport layer for SSP target ports) state machines ... 557
8.2.6.3.1 ST_T state machines overview ... 557
8.2.6.3.2 ST_TFR (target frame router) state machine ... 560
8.2.6.3.2.1 ST_TFR state machine overview ... 560
8.2.6.3.2.2 Processing Frame Received confirmations ... 560
8.2.6.3.2.3 Processing transport protocol service requests and responses ... 562
8.2.6.3.2.4 Processing miscellaneous requests and confirmations ... 566
8.2.6.3.3 ST_TTS (target transport server) state machine ... 566
8.2.6.3.3.1 ST_TTS state machine overview ... 566
8.2.6.3.3.2 ST_TTS1:Target_Start state ... 567
8.2.6.3.3.2.1 State description ... 567
8.2.6.3.3.2.2 Transition ST_TTS1:Target_Start to ST_TTS3:Prepare_Data_In ... 568
8.2.6.3.3.2.3 Transition ST_TTS1:Target_Start to ST_TTS4:Prepare_Xfer_Rdy ... 568
8.2.6.3.3.2.4 Transition ST_TTS1:Target_Start to ST_TTS5:Receive_Data_Out ... 568

Documents
Document Sharing Hub
Full document details: BS ISO/IEC 14776-262:2017

8.2.6.3.3.2.5 Transition ST_TTS1:Target_Start to ST_TTS7:Prepare_Response 568
8.2.6.3.3.3 ST_TTS2:Target_Send_Frame state 568
8.2.6.3.3.3.1 State description 568
8.2.6.3.3.3.2 Transition ST_TTS2:Target_Send_Frame to ST_TTS1:Target_Start 572
8.2.6.3.3.3.3 Transition ST_TTS2:Target_Send_Frame to ST_TTS3:Prepare_Data_In 572
8.2.6.3.3.3.4 Transition ST_TTS2:Target_Send_Frame to ST_TTS5:Receive_Data_Out 572
8.2.6.3.3.4 ST_TTS3:Prepare_Data_In state 572
8.2.6.3.3.4.1 State description 572
8.2.6.3.3.4.2 Transition ST_TTS3:Prepare_Data_In to ST_TTS2:Target_Send_Frame 574
8.2.6.3.3.5 ST_TTS4:Prepare_Xfer_Rdy state 574
8.2.6.3.3.5.1 State description 574
8.2.6.3.3.5.2 Transition ST_TTS4:Prepare_Xfer_Rdy to ST_TTS2:Target_Send_Frame 574
8.2.6.3.3.6 ST_TTS5:Receive_Data_Out state 575
8.2.6.3.3.6.1 State description 575
8.2.6.3.3.6.2 Transition ST_TTS5:Receive_Data_Out to ST_TTS1:Target_Start 576
8.2.6.3.3.6.3 Transition ST_TTS5:Receive_Data_Out to ST_TTS4:Prepare_Xfer_Rdy 576
8.2.6.3.3.7 ST_TTS6:Prepare_Response state 577
8.2.6.3.3.7.1 State description 577
8.2.6.3.3.7.2 Transition ST_TTS6:Prepare_Response to ST_TTS2:Target_Send_Frame 578
8.3 STP transport layer 578
8.3.1 Initial FIS 578
8.3.2 BIST Activate FIS 578
8.3.3 TT (transport layer for STP ports) state machines 578
8.4 SMP transport layer 579
8.4.1 SMP transport layer overview 579
8.4.2 SMP_REQUEST frame 580
8.4.3 SMP_RESPONSE frame 581
8.4.4 Sequence of SMP frames 581
8.4.5 MT (transport layer for SMP ports) state machines 582
8.4.5.1 SMP transport layer state machines overview 582
8.4.5.2 MT_IP (transport layer for SMP initiator ports) state machine 582
8.4.5.2.1 MT_IP state machine overview 582
8.4.5.2.2 MT_IP1:Idle state 583
8.4.5.2.2.1 State description 583
8.4.5.2.2.2 Transition MT_IP1:Idle to MT_IP2:Send 583
8.4.5.2.3 MT_IP2:Send state 584
8.4.5.2.3.1 State description 584
8.4.5.2.3.2 Transition MT_IP2:Send to MT_IP1:Idle 584
8.4.5.2.3.3 Transition MT_IP2:Send to MT_IP3:Receive 584
8.4.5.2.4 MT_IP3:Receive state 584
8.4.5.2.4.1 State description 584
8.4.5.2.4.2 Transition MT_IP3:Receive to MT_IP1:Idle 584
8.4.5.3 MT_TP (transport layer for SMP target ports) state machine 584
8.4.5.3.1 MT_TP state machine overview 584
8.4.5.3.2 MT_TP1:Idle state 585
8.4.5.3.2.1 State description 585
8.4.5.3.2.2 Transition MT_TP1:Idle to MT_TP2:Respond 585
8.4.5.3.3 MT_TP2:Respond state 586
8.4.5.3.3.1 State description 586
8.4.5.3.3.2 Transition MT_TP2:Respond to MT_TP1:Idle 586

9 Application layer 587
9.1 Application layer overview 587
9.2 SCSI application layer 587
9.2.1 SCSI transport protocol services 587
9.2.1.1 SCSI transport protocol services overview 587
9.2.1.2 Send SCSI Command transport protocol service 588
9.2.1.3 SCSI Command Received transport protocol service 589

Documents
Document Sharing Hub
Full document details: BS ISO/IEC 14776-262:2017

9.2.1.4 Send Command Complete transport protocol service ... 590
9.2.1.5 Command Complete Received transport protocol service ... 591
9.2.1.6 Send Data-In transport protocol service ... 592
9.2.1.7 Data-In Delivered transport protocol service ... 593
9.2.1.8 Receive Data-Out transport protocol service ... 593
9.2.1.9 Data-Out Received transport protocol service ... 594
9.2.1.10 Terminate Data Transfer transport protocol service ... 594
9.2.1.11 Data Transfer Terminated transport protocol service ... 595
9.2.1.12 Send Task Management Request transport protocol service ... 595
9.2.1.13 Task Management Request Received transport protocol service ... 596
9.2.1.14 Task Management Function Executed transport protocol service ... 597
9.2.1.15 Received Task Management Function Executed transport protocol service ... 598
9.2.2 SCSI application client error handling ... 599
9.2.3 SCSI device server error handling ... 600
9.2.3.1 SCSI Command Received () error handling ... 600
9.2.3.2 Data-Out Received () error handling ... 600
9.2.4 Task router and task manager error handling ... 601
9.2.5 SCSI transport protocol services for event notifications ... 601
9.2.6 SCSI commands ... 602
9.2.6.1 INQUIRY command ... 602
9.2.6.2 LOG SELECT and LOG SENSE commands ... 602
9.2.6.3 MODE SELECT and MODE SENSE commands ... 602
9.2.6.4 SEND DIAGNOSTIC and RECEIVE DIAGNOSTIC RESULTS commands ... 602
9.2.6.5 START STOP UNIT command ... 602
9.2.7 SCSI mode parameters ... 602
9.2.7.1 SCSI mode parameters overview ... 602
9.2.7.2 Disconnect-Reconnect mode page ... 603
9.2.7.2.1 Disconnect-Reconnect mode page overview ... 603
9.2.7.2.2 BUS INACTIVITY TIME LIMIT field ... 604
9.2.7.2.3 MAXIMUM CONNECT TIME LIMIT field ... 605
9.2.7.2.4 MAXIMUM BURST SIZE field ... 605
9.2.7.2.5 FIRST BURST SIZE field ... 605
9.2.7.3 Protocol Specific Logical Unit mode page ... 606
9.2.7.4 Protocol Specific Port mode page ... 606
9.2.7.5 Phy Control And Discover mode page ... 608
9.2.7.6 Shared Port Control mode page ... 612
9.2.7.7 Enhanced Phy Control mode page ... 613
9.2.8 SCSI log parameters ... 615
9.2.8.1 Protocol Specific Port log page ... 615
9.2.8.2 Protocol Specific Port log parameter for SAS target ports ... 616
9.2.9 SCSI diagnostic parameters ... 619
9.2.9.1 SCSI diagnostic parameters overview ... 619
9.2.9.2 Protocol Specific diagnostic page ... 619
9.2.9.3 Enclosure Control diagnostic page ... 625
9.2.9.4 Enclosure Status diagnostic page ... 625
9.2.9.5 Additional Element Status diagnostic page ... 625
9.2.10 SCSI power conditions ... 626
9.2.10.1 SCSI power conditions overview ... 626
9.2.10.2 SA_PC (SCSI application layer power condition) state machine ... 626
9.2.10.2.1 SA_PC state machine overview ... 626
9.2.10.2.2 SA_PC_0:Powered_On state ... 630
9.2.10.2.2.1 State description ... 630
9.2.10.2.2.2 Transition SA_PC_0:Powered_On to SA_PC_4:Active_Wait ... 630
9.2.10.2.2.3 Transition SA_PC_0:Powered_On to SA_PC_8:Stopped ... 630
9.2.10.2.3 SA_PC_1:Active state ... 630
9.2.10.2.3.1 State description ... 630
9.2.10.2.3.2 Transition SA_PC_1:Active to SA_PC_5:Wait_Idle ... 630
9.2.10.2.3.3 Transition SA_PC_1:Active to SA_PC_6:Wait_Standby ... 630

Documents
Document Sharing Hub
Full document details: BS ISO/IEC 14776-262:2017

9.2.10.2.3.4 Transition SA_PC_1:Active to SA_PC_10:Wait_Stopped 630
9.2.10.2.4 SA_PC_2:Idle state 630
9.2.10.2.4.1 State description 630
9.2.10.2.4.2 Transition SA_PC_2:Idle to SA_PC_4:Active_Wait 630
9.2.10.2.4.3 Transition SA_PC_2:Idle to SA_PC_5:Wait_Idle 630
9.2.10.2.4.4 Transition SA_PC_2:Idle to SA_PC_6:Wait_Standby 631
9.2.10.2.4.5 Transition SA_PC_2:Idle to SA_PC_7:Idle_Wait 631
9.2.10.2.4.6 Transition SA_PC_2:Idle to SA_PC_10:Wait_Stopped 631
9.2.10.2.5 SA_PC_3:Standby state 631
9.2.10.2.5.1 State description 631
9.2.10.2.5.2 Transition SA_PC_3:Standby to SA_PC_4:Active_Wait 631
9.2.10.2.5.3 Transition SA_PC_3:Standby to SA_PC_6:Wait_Standby 631
9.2.10.2.5.4 Transition SA_PC_3:Standby to SA_PC_7:Idle_Wait 631
9.2.10.2.5.5 Transition SA_PC_3:Standby to SA_PC_9: Standby_Wait 631
9.2.10.2.5.6 Transition SA_PC_3:Standby to SA_PC_10:Wait_Stopped 631
9.2.10.2.6 SA_PC_4:Active_Wait state 632
9.2.10.2.6.1 State description 632
9.2.10.2.6.2 Transition SA_PC_4:Active_Wait to SA_PC_1:Active 633
9.2.10.2.7 SA_PC_5:Wait_Idle state 634
9.2.10.2.7.1 SA_PC_5:Wait_Idle state description 634
9.2.10.2.7.2 Transition SA_PC_5:Wait_Idle to SA_PC_2:Idle 634
9.2.10.2.8 SA_PC_6:Wait_Standby state 634
9.2.10.2.8.1 SA_PC_6:Wait_Standby state description 634
9.2.10.2.8.2 Transition SA_PC_6:Wait_Standby to SA_PC_3:Standby 634
9.2.10.2.9 SA_PC_7:Idle_Wait state 634
9.2.10.2.9.1 State description 634
9.2.10.2.9.2 Transition SA_PC_7:Idle_Wait to SA_PC_2:Idle 635
9.2.10.2.10 SA_PC_8:Stopped state 635
9.2.10.2.10.1 State description 635
9.2.10.2.10.2 Transition SA_PC_8:Stopped to SA_PC_4:Active_Wait 636
9.2.10.2.10.3 Transition SA_PC_8:Stopped to SA_PC_7:Idle_Wait 636
9.2.10.2.10.4 Transition SA_PC_8:Stopped to SA_PC_9:Standby_Wait 636
9.2.10.2.11 SA_PC_9:Standby_Wait state 636
9.2.10.2.11.1 SA_PC_9:Standby_Wait state description 636
9.2.10.2.11.2 Transition SA_PC_9:Standby_Wait to SA_PC_3:Standby 636
9.2.10.2.12 SA_PC_10:Wait_Stopped state 636
9.2.10.2.12.1 SA_PC_10:Wait_Stopped state description 636
9.2.10.2.12.2 Transition SA_PC_10:Wait_Stopped to SA_PC_8:Stopped 636
9.2.11 SCSI vital product data (VPD) 636
9.2.11.1 SCSI vital product data (VPD) overview 636
9.2.11.2 Device Identification VPD page 636
9.2.11.3 Protocol Specific Logical Unit Information VPD page 638
9.3 ATA application layer 640
9.4 Management application layer 640
9.4.1 READY LED signal behavior 640
9.4.2 Management protocol services 641
9.4.3 SMP functions 642
9.4.3.1 SMP functions overview 642
9.4.3.2 SMP function request frame format 644
9.4.3.2.1 SMP function request frame format overview 644
9.4.3.2.2 SMP FRAME TYPE field 644
9.4.3.2.3 FUNCTION field 644
9.4.3.2.4 ALLOCATED RESPONSE LENGTH field 644
9.4.3.2.5 REQUEST LENGTH field 645
9.4.3.2.6 Additional request bytes 645
9.4.3.2.7 CRC field 646
9.4.3.3 SMP function response frame format 646
9.4.3.3.1 SMP function response frame format overview 646

Documents
Document Sharing Hub
Full document details: BS ISO/IEC 14776-262:2017

9.4.3.3.2 SMP FRAME TYPE field ... 646
9.4.3.3.3 FUNCTION field ... 646
9.4.3.3.4 FUNCTION RESULT field ... 647
9.4.3.3.5 RESPONSE LENGTH field ... 654
9.4.3.3.6 Additional response bytes ... 655
9.4.3.3.7 CRC field ... 655
9.4.3.4 REPORT GENERAL function ... 655
9.4.3.5 REPORT MANUFACTURER INFORMATION function ... 662
9.4.3.6 REPORT SELF-CONFIGURATION STATUS function ... 665
9.4.3.6.1 REPORT SELF-CONFIGURATION STATUS function overview ... 665
9.4.3.6.2 REPORT SELF-CONFIGURATION STATUS request ... 665
9.4.3.6.3 REPORT SELF-CONFIGURATION STATUS response ... 666
9.4.3.6.4 Self-configuration status descriptor ... 668
9.4.3.7 REPORT ZONE PERMISSION TABLE function ... 670
9.4.3.7.1 REPORT ZONE PERMISSION TABLE function overview ... 670
9.4.3.7.2 REPORT ZONE PERMISSION TABLE request ... 670
9.4.3.7.3 REPORT ZONE PERMISSION TABLE response ... 672
9.4.3.7.4 Zone permission descriptor ... 673
9.4.3.8 REPORT ZONE MANAGER PASSWORD function ... 674
9.4.3.9 REPORT BROADCAST function ... 676
9.4.3.9.1 REPORT BROADCAST function overview ... 676
9.4.3.9.2 REPORT BROADCAST request ... 677
9.4.3.9.3 REPORT BROADCAST response ... 678
9.4.3.9.4 Broadcast descriptor ... 679
9.4.3.10 DISCOVER function ... 680
9.4.3.11 REPORT PHY ERROR LOG function ... 697
9.4.3.12 REPORT PHY SATA function ... 700
9.4.3.13 REPORT ROUTE INFORMATION function ... 704
9.4.3.14 REPORT PHY EVENT function ... 707
9.4.3.14.1 REPORT PHY EVENT function overview ... 707
9.4.3.14.2 REPORT PHY EVENT request ... 707
9.4.3.14.3 REPORT PHY EVENT response ... 709
9.4.3.14.4 Phy event descriptor ... 710
9.4.3.15 DISCOVER LIST function ... 710
9.4.3.15.1 DISCOVER LIST function overview ... 710
9.4.3.15.2 DISCOVER LIST request ... 711
9.4.3.15.3 DISCOVER LIST response ... 713
9.4.3.15.4 DISCOVER LIST response SHORT FORMAT descriptor ... 715
9.4.3.16 REPORT PHY EVENT LIST function ... 716
9.4.3.16.1 REPORT PHY EVENT LIST function overview ... 716
9.4.3.16.2 REPORT PHY EVENT LIST request ... 716
9.4.3.16.3 REPORT PHY EVENT LIST response ... 717
9.4.3.16.4 Phy event list descriptor ... 719
9.4.3.17 REPORT EXPANDER ROUTE TABLE LIST function ... 719
9.4.3.17.1 REPORT EXPANDER ROUTE TABLE LIST function overview ... 719
9.4.3.17.2 REPORT EXPANDER ROUTE TABLE LIST request ... 720
9.4.3.17.3 REPORT EXPANDER ROUTE TABLE LIST response ... 722
9.4.3.17.4 Expander route table descriptor ... 724
9.4.3.18 CONFIGURE GENERAL function ... 724
9.4.3.19 ENABLE DISABLE ZONING function ... 728
9.4.3.20 ZONED BROADCAST function ... 730
9.4.3.21 ZONE LOCK function ... 732
9.4.3.22 ZONE ACTIVATE function ... 734
9.4.3.23 ZONE UNLOCK function ... 736
9.4.3.24 CONFIGURE ZONE MANAGER PASSWORD function ... 737
9.4.3.25 CONFIGURE ZONE PHY INFORMATION function ... 740
9.4.3.25.1 CONFIGURE ZONE PHY INFORMATION function overview ... 740
9.4.3.25.2 CONFIGURE ZONE PHY INFORMATION request ... 740

Documents
Document Sharing Hub
Full document details: BS ISO/IEC 14776-262:2017

9.4.3.25.3 Zone phy configuration descriptor ... 741
9.4.3.25.4 CONFIGURE ZONE PHY INFORMATION response ... 742
9.4.3.26 CONFIGURE ZONE PERMISSION TABLE function ... 742
9.4.3.26.1 CONFIGURE ZONE PERMISSION TABLE function overview ... 742
9.4.3.26.2 CONFIGURE ZONE PERMISSION TABLE request ... 743
9.4.3.26.3 Zone permission configuration descriptor ... 745
9.4.3.26.4 CONFIGURE ZONE PERMISSION TABLE response ... 746
9.4.3.27 CONFIGURE ROUTE INFORMATION function ... 747
9.4.3.28 PHY CONTROL function ... 749
9.4.3.29 PHY TEST FUNCTION function ... 757
9.4.3.30 CONFIGURE PHY EVENT function ... 761
9.4.3.30.1 CONFIGURE PHY EVENT function overview ... 761
9.4.3.30.2 CONFIGURE PHY EVENT request ... 761
9.4.3.30.3 Phy event configuration descriptor ... 762
9.4.3.30.4 CONFIGURE PHY EVENT response ... 763

Annex A (normative) Jitter tolerance patterns ... 764
A.1 Jitter tolerance pattern (JTPAT) ... 764
A.2 Compliant jitter tolerance pattern (CJTPAT) ... 764
A.3 Considerations for a phy transmitting JTPAT and CJTPAT ... 770
A.4 Considerations for a phy receiving JTPAT and CJTPAT ... 770

Annex B (informative) SAS to SAS phy reset sequence examples ... 772

Annex C (informative) CRC ... 777
C.1 CRC generator and checker implementation examples ... 777
C.2 CRC implementation in C ... 777
C.3 CRC implementation with XORs ... 778
C.4 CRC examples ... 780

Annex D (informative) SAS address hashing ... 781
D.1 SAS address hashing overview ... 781
D.2 Hash collision probability ... 781
D.3 Hash generation ... 782
D.4 Hash implementation in C ... 782
D.5 Hash implementation with XORs ... 783
D.6 Hash examples ... 784

Annex E (informative) Scrambling ... 787
E.1 Scrambler implementation example ... 787
E.2 Scrambler implementation in C ... 787
E.3 Scrambler implementation with XORs ... 788
E.4 Scrambler examples ... 789

Annex F (informative) ATA architectural notes ... 791
F.1 STP differences from Serial ATA (SATA) ... 791
F.2 STP differences from Serial ATA II ... 791
F.3 Affiliation policies ... 791
F.3.1 Affiliation policies overview ... 791
F.3.2 Affiliation policy for static STP initiator port to STP target port mapping ... 792
F.3.3 Affiliation policy with SATA queued commands and multiple STP initiator ports ... 792
F.3.4 Applicability of affiliation for STP target ports ... 792
F.4 SATA port selector considerations ... 792
F.5 SATA device not transmitting initial Register Device-to-Host FIS ... 792

Annex G (informative) Minimum deletable primitive insertion rate summary ... 794

Annex H (informative) Zone permission configuration descriptor examples ... 795

Documents
Document Sharing Hub

Full document details: BS ISO/IEC 14776-262:2017

Annex I (informative) SAS addressing 798
I.1 SAS addressing in SAS domains 798
I.2 Expander device SAS addresses 798

Annex J (informative) Expander device handling of connections 799
J.1 Expander device handling of connections overview 799
J.2 Connection request - OPEN_ACCEPT 801
J.3 Connection request - OPEN_REJECT by end device 802
J.4 Connection request - OPEN_REJECT by expander device 803
J.5 Connection request - arbitration lost 804
J.6 Connection request - backoff and retry 805
J.7 Connection request - backoff and reverse path 806
J.8 Connection close - single step 807
J.9 Connection close - simultaneous 808
J.10 BREAK handling during path arbitration when the BREAK_REPLY method is disabled 809
J.11 BREAK handling during connection when the BREAK_REPLY method is disabled 810
J.12 BREAK handling during path arbitration when the BREAK_REPLY method is enabled 811
J.13 BREAK handling during connection when BREAK_REPLY method is enabled 812
J.14 STP connection - originated by STP initiator port 813
J.15 STP connection - originated by STP target port in an STP SATA bridge 814
J.16 STP connection close - originated by STP initiator port 815
J.17 STP connection close - originated by STP target port in an STP SATA bridge 816
J.18 Connection request - XL1:Request_Path to XL5:Forward_Open transition 817
J.19 Pathway blocked and pathway recovery example 818

Annex K (informative) Primitive encoding 820

Annex L (informative) Standards bodies contact information 823

Bibliography 824

Documents
Document Sharing Hub

Full document details: BS ISO/IEC 14776-262:2017

Figure 1 — Organization of this standard ... 38
Figure 2 — SCSI document relationships ... 39
Figure 3 — ATA document relationships ... 39
Figure 4 – Examples of association relationships in class diagrams ... 79
Figure 5 – Examples of aggregation relationships in class diagrams ... 80
Figure 6 – Example of generalization relationships in class diagrams ... 81
Figure 7 – Example of a dependency relationship in class diagrams ... 81
Figure 8 – Examples of link relationships for object diagrams ... 82
Figure 9 – State machine conventions ... 83
Figure 10 – SAS Domain class diagram ... 88
Figure 11 – Phy class diagram ... 90
Figure 12 – SAS phy object diagram ... 91
Figure 13 – Expander phy object diagram ... 92
Figure 14 – Ports (narrow ports and wide ports) ... 94
Figure 15 – Port class diagram ... 95
Figure 16 – Port object diagram ... 96
Figure 17 – SAS devices ... 97
Figure 18 – Expander device ... 98
Figure 19 – Domains ... 99
Figure 20 – SAS domain bridging to ATA domains ... 100
Figure 21 – SAS domains bridging to ATA domains with SATA port selectors ... 101
Figure 22 – Devices spanning SAS domains ... 102
Figure 23 – Single expander device topology example ... 102
Figure 24 – Multiple expander device topologies ... 103
Figure 25 – Potential pathways ... 104
Figure 26 – Multiple connections on wide ports ... 106
Figure 27 – State machines for SAS devices ... 115
Figure 28 – State machines for expander devices ... 116
Figure 29 – Transmit data path in a SAS phy ... 117
Figure 30 – SSP link, port, SSP transport, and SCSI application layer state machines ... 118
Figure 31 – SMP link, port, SMP transport, and management application layer state machines ... 119
Figure 32 – STP link, port, STP transport, and ATA application layer state machines ... 120
Figure 33 – Transmit data path and state machines in an expander phy ... 121
Figure 34 – Receive data path in a SAS phy ... 123
Figure 35 – Receive data path in an expander phy ... 124
Figure 36 – State machines and SAS Device classes ... 125
Figure 37 – State machines and Expander Device classes ... 126
Figure 38 – Reset terminology ... 127
Figure 39 – Expander device model ... 130
Figure 40 – Expander device interfaces ... 133
Figure 41 – Expander device interface detail ... 134
Figure 42 – Phy-based expander route table ... 142
Figure 43 – Expander-based expander route table ... 143
Figure 44 – Level-order traversal example ... 145
Figure 45 – Examples of invalid topologies ... 149
Figure 46 – Externally configurable expander device and table-to-table attachment ... 152
Figure 47 – Expander route index levels example ... 153
Figure 48 – Expander route index order example ... 155
Figure 49 – Zoning example ... 157
Figure 50 – One ZPSDS example ... 158
Figure 51 – Zone manager location examples ... 159
Figure 52 – Three ZPSDSes example ... 160
Figure 53 – Extending a ZPSDS example ... 162
Figure 54 – Overtaking a ZPSDS example ... 163
Figure 55 – Zoning expander route table ... 168
Figure 56 – SAS bit transmission logic ... 194
Figure 57 – SAS bit reception logic ... 195
Figure 58 – OOB signal transmission ... 196

Documents
Document Sharing Hub
Full document details: BS ISO/IEC 14776-262:2017

Figure 59 – OOB signal detection 198
Figure 60 – TTIU transmitter BMC encoding 204
Figure 61 – TTIU bit cell transmitter encoding 205
Figure 62 – TTIU bit cell receiver decoding 206
Figure 63 – SATA OOB sequence 215
Figure 64 – SATA speed negotiation sequence 215
Figure 65 – SAS to SATA OOB sequence 217
Figure 66 – SAS to SAS OOB sequence 218
Figure 67 – SNW-1, SNW-2, and Final-SNW 222
Figure 68 – SNW-3 223
Figure 69 – Train_Tx-SNW 225
Figure 70 – Pattern marker transmission 226
Figure 71 – Valid pattern marker detection 227
Figure 72 – Train_Rx-SNW 228
Figure 73 – SAS speed negotiation sequence SNW flowchart 230
Figure 74 – SAS speed negotiation sequence (both phys SNW-1 through Train_Rx-SNW with no Train_Tx-SNW) 232
Figure 75 – SAS speed negotiation sequence (both phys SNW-1 through Train_Rx-SNW with Train_Tx-SNW) 233
Figure 76 – SAS speed negotiation sequence (phy A: SNW-1 through SNW-3, phy B: SNW-2 only) 234
Figure 77 – SAS speed negotiation sequence (phy A: SNW-3 only, phy B: SNW-1 only) 235
Figure 78 – SAS speed negotiation sequence - phy reset problem in Final-SNW 236
Figure 79 – SAS speed negotiation sequence - phy reset problem in SNW-3 237
Figure 80 – SAS speed negotiation sequence - phy reset problem in Train_Rx-SNW 238
Figure 81 – SAS speed negotiation sequence - multiple Train_Rx-SNWs 239
Figure 82 – Local phy achieves pattern lock before the attached phy achieves pattern lock 241
Figure 83 – Local phy achieves pattern lock after the attached phy achieves pattern lock 242
Figure 84 – Attached receiver handshake sequence (requesting two increments to coefficient 1) 244
Figure 85 – Attached receiver handshake sequence (requesting a decrement and an increment to coefficient 1) 245
Figure 86 – Handshake sequence to set local phy's receiver coefficients to no_equalization values (attached phy) 247
Figure 87 – Handshake sequence to set local phy's receiver coefficients to no_equalization values (local phy) 248
Figure 88 – Local phy's receiver indicates completion of training before the attached phy's receiver completes training 249
Figure 89 – Attached phy's receiver indicates completion of training before the local phy's receiver completes training 250
Figure 90 – Processing an invalid TTIU 252
Figure 91 – Hot-plug and the phy reset sequence 254
Figure 92 – Transition to active phy power condition 255
Figure 93 – Hot plug and low phy power condition 256
Figure 94 – SP (phy layer) state machine - OOB sequence states 262
Figure 95 – SP (phy layer) state machine - SAS speed negotiation states 268
Figure 96 – SP (phy layer) state machine - SAS speed negotiation states for SNW-3 and Train_Rx-SNW and Train_Tx-SNW 269
Figure 97 – SP (phy layer) state machine - SAS phy power condition states 280
Figure 98 – SP (phy layer) state machine - SATA host emulation states 283
Figure 99 – SP (phy layer) state machine – SATA port selector state 288
Figure 100 – SP (phy layer) state machine - SATA spinup hold state 289
Figure 101 – SP_DWS (phy layer dword synchronization) state machine 291
Figure 102 – PTT_T (phy layer transmitter training transmit pattern) state machine 302
Figure 103 – PTT_R (phy layer transmitter training receive pattern) state machine 310
Figure 104 – PTT_SC1, PTT_SC2, and PTT_SC3 (phy layer transmitter training set transmitter coefficient) state machines 318
Figure 105 – PTT_GC1, PTT_GC2, and PTT_GC3 (phy layer transmitter training get transmitter coefficient) state machines 323
Figure 106 – PTT_PL (phy layer transmitter training pattern lock) state machine 327

Documents
Document Sharing Hub
Full document details: BS ISO/IEC 14776-262:2017

Figure 107 – Multiplexing disabled ... 330
Figure 108 – Multiplexing enabled ... 330
Figure 109 – Transmitting a repeated primitive sequence ... 343
Figure 110 – Receiving a repeated primitive sequence ... 344
Figure 111 – Extended primitive sequences ... 345
Figure 112 – Triple primitive sequences ... 346
Figure 113 – Redundant primitive sequences ... 347
Figure 114 – Elasticity buffer ... 360
Figure 115 – Address frame, SSP frame, and SMP frame CRC bit ordering ... 365
Figure 116 – STP frame CRC bit ordering ... 366
Figure 117 – Transmit path bit ordering ... 369
Figure 118 – Receive path bit ordering ... 370
Figure 119 – STP transmit path bit ordering ... 371
Figure 120 – STP receive path bit ordering ... 372
Figure 121 – Address frame transmission ... 372
Figure 122 – Identification sequence ... 382
Figure 123 – Hard reset sequence ... 383
Figure 124 – SL_IR (link layer identification and hard reset) state machines ... 385
Figure 125 – Transitioning from the active phy power condition to a low phy power condition ... 390
Figure 126 – SL_P_S (link layer power source device) state machine ... 394
Figure 127 – SL_P_C (link layer power consumer device) state machine ... 398
Figure 128 – Example simultaneous connection recommendations for wide ports ... 404
Figure 129 – Aborting a connection request with a BREAK primitive sequence ... 413
Figure 130 – Connection request timeout example ... 414
Figure 131 – Closing a connection example ... 415
Figure 132 – Rate matching example ... 418
Figure 133 – SL (link layer for SAS logical phys) state machines (part 1) ... 420
Figure 134 – SL (link layer for SAS logical phys) state machines (part 2) ... 421
Figure 135 – SL (link layer for SAS logical phys) state machines (part 3) ... 422
Figure 136 – XL (link layer for expander logical phys) state machine (part 1) ... 439
Figure 137 – XL (link layer for expander logical phys) state machine (part 2) ... 440
Figure 138 – XL (link layer for expander logical phys) state machine (part 3) ... 441
Figure 139 – XL (link layer for expander logical phys) state machine (part 4) ... 442
Figure 140 – SSP frame transmission ... 458
Figure 141 – Interlocked frames ... 460
Figure 142 – Non-interlocked frames with the same initiator port transfer tags ... 460
Figure 143 – Non-interlocked frames with different initiator port transfer tags ... 461
Figure 144 – Closing an SSP connection example ... 462
Figure 145 – SSP (link layer for SSP phys) state machines (part 1 - frame transmission) ... 464
Figure 146 – SSP (link layer for SSP phys) state machines (part 2 - frame reception) ... 465
Figure 147 – STP frame transmission ... 473
Figure 148 – STP flow control ... 477
Figure 149 – Transmitting a continued primitive sequence ... 478
Figure 150 – Receiving a continued primitive sequence ... 479
Figure 151 – Example simultaneous connection recommendations for an expander device ... 482
Figure 152 – STP initiator port opening an STP connection ... 484
Figure 153 – STP target port opening an STP connection ... 485
Figure 154 – SMP frame transmission ... 486
Figure 155 – SMP_IP (link layer for SMP initiator phys) state machine ... 488
Figure 156 – SMP_TP (link layer for SMP target phys) state machine ... 490
Figure 157 – Port layer examples ... 493
Figure 158 – PL_OC (port layer overall control) state machine ... 496
Figure 159 – PL_PM (port layer phy manager) state machine (part 1) ... 507
Figure 160 – PL_PM (port layer phy manager) state machine (part 2) ... 508
Figure 161 – Task management function sequence of SSP frames ... 532
Figure 162 – Non-data command sequence of SSP frames ... 533
Figure 163 – Write command sequence of SSP frames ... 533
Figure 164 – Read command sequence of SSP frames ... 534

Documents
Document Sharing Hub
Full document details: BS ISO/IEC 14776-262:2017

Figure 165 – Bidirectional command sequence of SSP frames 535
Figure 166 – ST_I (transport layer for SSP initiator ports) state machines 543
Figure 167 – ST_T (transport layer for SSP target ports) state machines 559
Figure 168 – Sequence of SMP frames 581
Figure 169 – MT_IP (transport layer for SMP initiator ports) state machine 583
Figure 170 – MT_TP (transport layer for SMP target ports) state machine 585
Figure 171 – SA_PC (SCSI application layer power condition) state machine for SAS 629
Figure A.1 – CJTPAT pre-scrambling 765
Figure B.1 – SAS speed negotiation sequence (phy A: SNW-1 only, phy B: SNW-1 only) 772
Figure B.2 – SAS speed negotiation sequence (phy A: SNW-1, SNW-2, phy B: SNW-1, SNW-2) 773
Figure B.3 – SAS speed negotiation sequence (phy A: SNW-1, SNW-2, and SNW-3, phy B: SNW-1 and SNW-2) 774
Figure B.4 – SAS speed negotiation sequence (phy A: SNW-2, SNW-3, phy B: SNW-1, SNW-2) 775
Figure B.5 – SAS speed negotiation sequence (phy A: SNW-1 only, phy B: SNW-2 only) 776
Figure C.1 – CRC generator example 777
Figure C.2 – CRC checker example 777
Figure D.1 – BCH(69, 39, 9) code generator 782
Figure E.1 – Scrambler 787
Figure J.1 – Example topology 799
Figure J.2 – Connection request - OPEN_ACCEPT 801
Figure J.3 – Connection request - OPEN_REJECT by end device 802
Figure J.4 – Connection request - OPEN_REJECT by expander device 803
Figure J.5 – Connection request - arbitration lost 804
Figure J.6 – Connection request - backoff and retry 805
Figure J.7 – Connection request - backoff and reverse path 806
Figure J.8 – Connection close - single step 807
Figure J.9 – Connection close - simultaneous 808
Figure J.10 – BREAK handling during path arbitration when the BREAK_REPLY method is disabled 809
Figure J.11 – BREAK handling during a connection when the BREAK_REPLY method is disabled 810
Figure J.12 – BREAK handling during path arbitration when the BREAK_REPLY method is enabled 811
Figure J.13 – BREAK handling during a connection when the BREAK_REPLY method is enabled 812
Figure J.14 – STP connection - originated by STP initiator port 813
Figure J.15 – STP connection - originated by STP target port in an STP SATA bridge 814
Figure J.16 – STP connection close - originated by STP initiator port 815
Figure J.17 – STP connection close - originated by STP target port in an STP SATA bridge 816
Figure J.18 – XL1:Request_Path to XL5:Forward_Open transition 817
Figure J.19 – Partial pathway recovery 818

Documents
Document Sharing Hub
Full document details: BS ISO/IEC 14776-262:2017

Table 1 – Numbering conventions ... 76
Table 2 – Constraint and note notation ... 77
Table 3 – Class diagram notation for classes ... 78
Table 4 – Multiplicity notation ... 78
Table 5 – Class diagram notation for associations ... 79
Table 6 – Class diagram notation for aggregations ... 80
Table 7 – Class diagram notation for generalizations ... 80
Table 8 – Class diagram notation for dependency ... 81
Table 9 – Object diagram notation for objects ... 82
Table 10 – Object diagram notation for link ... 82
Table 11 – Data dword containing a value ... 85
Table 12 – Data dword containing four one-byte fields ... 85
Table 13 – Logical links ... 93
Table 14 – Broadcast types ... 107
Table 15 – Names and identifiers ... 109
Table 16 – SCSI architecture model object attribute mapping ... 109
Table 17 – NAA IEEE Registered format ... 110
Table 18 – NAA Locally Assigned format ... 111
Table 19 – Hashed SAS address code parameters ... 111
Table 20 – Device name created from the IDENTIFY DEVICE data from an ATA device or IDENTIFY PACKET DEVICE data from an ATAPI device world wide name ... 113
Table 21 – Expander logical phy to ECM requests ... 135
Table 22 – Expander logical phy to ECM responses ... 135
Table 23 – ECM to expander logical phy confirmations ... 136
Table 24 – Expander logical phy to ECR to expander logical phy requests and indications ... 137
Table 25 – Expander logical phy to ECR to expander logical phy responses and confirmations ... 138
Table 26 – Expander logical phy to BPP requests ... 139
Table 27 – BPP to expander logical phy indications ... 139
Table 28 – Routing attributes and routing methods ... 140
Table 29 – Expander route table types ... 141
Table 30 – Expander route table levels for externally configurable expander device R phy A ... 154
Table 31 – Expander route table levels for externally configurable expander device N ... 154
Table 32 – Expander route entries for externally configurable expander device E0 phy 1 ... 156
Table 33 – Expander route entries for externally configurable expander device F phy 0 ... 156
Table 34 – Zone manager password ... 161
Table 35 – Zone phy information ... 164
Table 36 – Zone phy information usage ... 164
Table 37 – Zone groups ... 166
Table 38 – Zone permission table ... 167
Table 39 – Zone permission table granting minimal permissions ... 167
Table 40 – Source zone group determination ... 169
Table 41 – Destination zone group determination ... 169
Table 42 – REQUESTED INSIDE ZPSDS bit and INSIDE ZPSDS PERSISTENT bit changes after a link reset sequence ... 170
Table 43 – ZONE GROUP field values if the ZONE GROUP PERSISTENT bit is set to one ... 171
Table 44 – Conditions that cause the ZONE GROUP field to be reset if the ZONE GROUP PERSISTENT bit is set to zero ... 171
Table 45 – PHY EVENT SOURCE field ... 180
Table 46 – Bit designations ... 184
Table 47 – Conversion from byte notation to character name example ... 185
Table 48 – Data characters ... 187
Table 49 – Control characters ... 192
Table 50 – Control character usage ... 192
Table 51 – Delayed code violation example ... 193
Table 52 – SNW-3 phy capabilities ... 199
Table 53 – Requested logical link rate ... 200
Table 54 – Multiplexing negotiation ... 201
Table 55 – Supported settings bit priorities ... 202

Documents
Document Sharing Hub
Full document details: BS ISO/IEC 14776-262:2017

Table 56 – Example SNW-3 phy capabilities values ... 203
Table 57 – Train_Tx-SNW TTIU bit ... 206
Table 58 – Train_Tx-SNW TTIU ... 206
Table 59 – PATTERN TYPE field ... 207
Table 60 – Control/Status TTIU ... 207
Table 61 – COEFFICIENT SETTINGS field ... 208
Table 62 – COEFFICIENT 1 REQUEST field, COEFFICIENT 2 REQUEST field, and COEFFICIENT 3 REQUEST field ... 209
Table 63 – Valid coefficient requests ... 210
Table 64 – COEFFICIENT 1 STATUS field, COEFFICIENT 2 STATUS field, and COEFFICIENT 3 STATUS field ... 211
Table 65 – Error Response TTIU ... 211
Table 66 – ERROR CODE field ... 213
Table 67 – Phy reset sequence timing specifications ... 214
Table 68 – SATA speed negotiation sequence timing specifications ... 216
Table 69 – SAS speed negotiation sequence timing specifications ... 220
Table 70 – SNW rates used in SNW-1, SNW-2, and Final-SNW ... 222
Table 71 – SNW-3 phy capabilities bit ... 223
Table 72 – Transmitter training pattern ... 225
Table 73 – Receiver training patterns ... 228
Table 74 – SP state machine timers ... 259
Table 75 – Messages to SP transmitter and SP receiver at start of RCDT ... 270
Table 76 – SP_DWS state machine timers ... 290
Table 77 – Mapping messages to the Training Control word ... 305
Table 78 – Mapping messages from PTT_SC1 state machine, PTT_SC2 state machine, and PTT_SC3 state machine to the Training Status word ... 305
Table 79 – Mapping Transmit Error Response message arguments to Error Response TTIU fields ... 306
Table 80 – Transmit Error Response message arguments sent to PTT_T state machine ... 312
Table 81 – Mapping the Training Status word to SP receiver messages ... 313
Table 82 – Mapping the Training Status word to PTT_GC1 state machine messages, PTT_GC2 state machine messages, and PTT_GC3 state machine messages ... 314
Table 83 – Mapping the Training Control word to PTT_SC1 state machine messages, PTT_SC2 state machine messages, and PTT_SC3 state machine messages ... 315
Table 84 – Mapping Coefficient Request byte to PTT_SC3 state machine message, PTT_SC2 state machine message, and PTT_SC1 state machine messages ... 316
Table 85 – Mapping messages to the PTT_T state machine ... 320
Table 86 – PTT_SC1 messages to substitute for PTT_SC2 messages ... 321
Table 87 – PTT_SC1 messages to substitute for PTT_SC3 messages ... 322
Table 88 – Mapping messages to the PTT_T state machine ... 324
Table 89 – PTT_GC1 messages to substitute for PTT_GC2 messages ... 325
Table 90 – PTT_GC1 messages to substitute for PTT_GC2 messages ... 325
Table 91 – Primitive format ... 332
Table 92 – Deletable primitives ... 333
Table 93 – Primitives not specific to type of connection ... 334
Table 94 – Primitives used inside SSP and SMP connections ... 336
Table 95 – Primitives used inside STP connections and on SATA physical links ... 337
Table 96 – Primitive encoding for deletable primitives ... 338
Table 97 – Primitive encoding for primitives not specific to type of connection ... 339
Table 98 – Primitive encoding for primitives used only inside SSP and SMP connections ... 341
Table 99 – Primitive encoding for primitives that are used only inside STP connections and only on SATA physical links ... 342
Table 100 – Primitive sequences ... 343
Table 101 – ALIGN primitives ... 348
Table 102 – MUX primitives ... 349
Table 103 – NOTIFY primitives ... 349
Table 104 – AIP primitives ... 351
Table 105 – BROADCAST primitives ... 352
Table 106 – CLOSE primitives ... 352
Table 107 – Abandon-class OPEN_REJECT primitives ... 354
Table 108 – Retry-class OPEN_REJECT primitives ... 355

Documents
Document Sharing Hub
Full document details: BS ISO/IEC 14776-262:2017

Table 109 – PS_REQ primitives ... 356
Table 110 – DONE primitives ... 357
Table 111 – NAK primitives ... 358
Table 112 – RRDY primitives ... 358
Table 113 – Physical link rate tolerance management deletable primitive insertion requirement ... 361
Table 114 – CRC notation and definitions ... 363
Table 115 – Scrambling for different data dword types ... 367
Table 116 – Address frame format ... 373
Table 117 – ADDRESS FRAME TYPE field ... 373
Table 118 – IDENTIFY address frame format ... 374
Table 119 – DEVICE TYPE field ... 375
Table 120 – REASON field ... 375
Table 121 – POWER CAPABLE field ... 377
Table 122 – OPEN address frame format ... 378
Table 123 – SAS PROTOCOL field ... 379
Table 124 – FEATURES field ... 379
Table 125 – CONNECTION RATE field ... 379
Table 126 – ARBITRATION WAIT TIME field ... 381
Table 127 – SL_IR_IRC state machine timers ... 384
Table 128 – PS_ACK pattern ... 391
Table 129 – SL_P_S state machine timers ... 393
Table 130 – SL_P_C state machine timers ... 397
Table 131 – Connection results of a connection request ... 405
Table 132 – Arbitration priority for OPEN address frames passing on a logical link ... 406
Table 133 – Arbitration priority for a Request Path request in the ECM ... 409
Table 134 – Pathway recovery priority ... 411
Table 135 – Results of aborting a connection request ... 412
Table 136 – Results of closing a connection ... 414
Table 137 – Results of breaking a connection ... 416
Table 138 – Rate matching deletable primitive insertion requirements ... 417
Table 139 – SL_CC state machine timers ... 426
Table 140 – SL_CC state machine variables ... 426
Table 141 – OPEN_REJECT Received message to Open Failed confirmation mapping ... 430
Table 142 – XL state machine timers ... 438
Table 143 – XL state machine variable ... 438
Table 144 – SSP frame interlock requirements ... 459
Table 145 – SSP state machines timers ... 463
Table 146 – STP link layer differences from SATA link layer during an STP connection ... 474
Table 147 – Affiliation policies ... 479
Table 148 – Affiliation context relative identifier example ... 481
Table 149 – PL_OC state machine timers ... 495
Table 150 – Confirmations from Unable To Connect messages ... 502
Table 151 – PL_PM state machine timers ... 506
Table 152 – Messages from Open Failed confirmations ... 510
Table 153 – SSP frame format ... 517
Table 154 – FRAME TYPE field ... 518
Table 155 – TLR CONTROL field for COMMAND frames ... 519
Table 156 – COMMAND frame - Command information unit ... 521
Table 157 – TASK ATTRIBUTE field ... 522
Table 158 – TASK frame - Task Management Function information unit ... 523
Table 159 – TASK MANAGEMENT FUNCTION field ... 524
Table 160 – XFER_RDY frame - Transfer Ready information unit ... 526
Table 161 – DATA frame - Data information unit ... 527
Table 162 – RESPONSE frame - Response information unit ... 529
Table 163 – DATAPRES field ... 530
Table 164 – RESPONSE DATA field ... 531
Table 165 – RESPONSE CODE field ... 531
Table 166 – Sequences of SSP frames ... 532

Documents
Document Sharing Hub
Full document details: BS ISO/IEC 14776-262:2017

Table 167 – Confirmations sent to the SCSI application layer if a frame transmission error or reception error occurs ... 547
Table 168 – ST_ITS state machine variables ... 548
Table 169 – ST_ITS state machine arguments ... 549
Table 170 – Messages sent to the ST_IFR state machine ... 551
Table 171 – Transmission Complete messages for XFER_RDY frame verification failures ... 552
Table 172 – Reception Complete messages for read DATA frame verification failures ... 556
Table 173 – ST_T state machine timers ... 558
Table 174 – Task Management Function Executed Service Response argument mapping to Request (Send Transport Response) Service Response argument ... 563
Table 175 – Confirmations sent to the SCSI application layer ... 565
Table 176 – ST_TTS state machine variables ... 567
Table 177 – ST_TTS state machine arguments ... 567
Table 178 – Messages sent to the ST_TFR state machine ... 571
Table 179 – Additional messages sent to the ST_TFR state machine ... 572
Table 180 – Reception Complete message for write DATA frame verification failures ... 575
Table 181 – Request (Send Transport Response) message Service Response argument to RESPONSE frame RESPONSE DATA field mapping ... 577
Table 182 – SMP frame format ... 579
Table 183 – SMP FRAME TYPE field ... 579
Table 184 – SMP_REQUEST frame format ... 580
Table 185 – SMP_RESPONSE frame format ... 581
Table 186 – MT_TP time limits ... 585
Table 187 – Execute Command procedure call transport protocol services ... 587
Table 188 – Task management function procedure call transport protocol services ... 588
Table 189 – Send SCSI Command transport protocol service arguments ... 589
Table 190 – SCSI Command Received transport protocol service arguments ... 590
Table 191 – Send Command Complete transport protocol service arguments ... 591
Table 192 – Command Complete Received transport protocol service arguments ... 592
Table 193 – Send Data-In transport protocol service arguments ... 593
Table 194 – Data-In Delivered transport protocol service arguments ... 593
Table 195 – Receive Data-Out transport protocol service arguments ... 594
Table 196 – Data-Out Received transport protocol service arguments ... 594
Table 197 – Terminate Data Transfer transport protocol service arguments ... 595
Table 198 – Data Transfer Terminated transport protocol service arguments ... 595
Table 199 – Send Task Management Request transport protocol service arguments ... 596
Table 200 – Task Management Request Received transport protocol service arguments ... 597
Table 201 – Task Management Function Executed transport protocol service arguments ... 598
Table 202 – Received Task Management Function Executed transport protocol service arguments ... 599
Table 203 – Delivery Result to additional sense code mapping ... 601
Table 204 – SCSI transport protocol events ... 602
Table 205 – SSP target port mode pages ... 603
Table 206 – Disconnect-Reconnect mode page for SAS SSP ... 604
Table 207 – Protocol Specific Logical Unit mode page for SAS SSP ... 606
Table 208 – Protocol Specific Port mode page for SAS SSP ... 607
Table 209 – I_T NEXUS LOSS TIME field ... 608
Table 210 – Phy Control And Discover mode page ... 609
Table 211 – SAS phy mode descriptor ... 611
Table 212 – Shared Port Control mode page ... 612
Table 213 – Enhanced Phy Control mode page ... 613
Table 214 – Enhanced phy control mode descriptor ... 614
Table 215 – Protocol Specific Port log parameters ... 615
Table 216 – Protocol Specific Port log page for SAS SSP ... 615
Table 217 – Protocol Specific Port log parameter for SAS target ports ... 616
Table 218 – SAS phy log descriptor ... 617
Table 219 – SSP target port diagnostic pages ... 619
Table 220 – Diagnostic pages affected by zoning ... 619
Table 221 – Protocol Specific diagnostic page for SAS SSP ... 620

Documents
Document Sharing Hub
Full document details: BS ISO/IEC 14776-262:2017

Table 222 – PHY TEST FUNCTION field ... 621
Table 223 – PHY TEST PATTERN field ... 622
Table 224 – PHY TEST FUNCTION SSC field ... 623
Table 225 – PHY TEST FUNCTION PHYSICAL LINK RATE field ... 623
Table 226 – PHY TEST PATTERN DWORDS CONTROL field ... 624
Table 227 – TWO_DWORDS phy test pattern examples ... 625
Table 228 – Summary of states in the SA_PC state machine ... 627
Table 229 – VPD pages with special requirements for SAS SSP ... 636
Table 230 – Device Identification VPD page designation descriptors for the SAS target port ... 637
Table 231 – Device Identification VPD page designation descriptors for the SAS target device ... 638
Table 232 – Protocol Specific Logical Unit Information VPD page for SAS SSP ... 639
Table 233 – Logical unit information descriptor for SAS SSP ... 640
Table 234 – READY LED signal behavior ... 641
Table 235 – SMP functions (FUNCTION field) ... 642
Table 236 – SMP request frame format ... 644
Table 237 – SMP response frame format ... 646
Table 238 – FUNCTION RESULT field ... 647
Table 239 – Function result priority ... 651
Table 240 – REPORT GENERAL request ... 655
Table 241 – REPORT GENERAL response ... 656
Table 242 – NUMBER OF ZONE GROUPS field ... 660
Table 243 – REPORT MANUFACTURER INFORMATION request ... 662
Table 244 – REPORT MANUFACTURER INFORMATION response ... 663
Table 245 – REPORT SELF-CONFIGURATION STATUS request ... 665
Table 246 – REPORT SELF-CONFIGURATION STATUS response ... 666
Table 247 – Self-configuration status descriptor ... 668
Table 248 – STATUS TYPE field ... 668
Table 249 – REPORT ZONE PERMISSION TABLE request ... 670
Table 250 – REPORT TYPE field ... 671
Table 251 – REPORT ZONE PERMISSION TABLE response ... 672
Table 252 – Zone permission descriptors ... 673
Table 253 – Zone permission descriptor for a source zone group (i.e., s) with 128 zone groups ... 673
Table 254 – Zone permission descriptor for a source zone group (i.e., s) with 256 zone groups ... 674
Table 255 – Zone permission descriptor bit requirements ... 674
Table 256 – REPORT ZONE MANAGER PASSWORD request ... 675
Table 257 – REPORT TYPE field ... 675
Table 258 – REPORT ZONE MANAGER PASSWORD response ... 676
Table 259 – REPORT BROADCAST request ... 677
Table 260 – REPORT BROADCAST response ... 678
Table 261 – Broadcast descriptor ... 679
Table 262 – BROADCAST REASON field for originated Broadcasts ... 680
Table 263 – DISCOVER request ... 681
Table 264 – DISCOVER response ... 682
Table 265 – ATTACHED DEVICE TYPE field ... 685
Table 266 – NEGOTIATED LOGICAL LINK RATE field and NEGOTIATED PHYSICAL LINK RATE field ... 686
Table 267 – NEGOTIATED LOGICAL LINK RATE field ... 687
Table 268 – ATTACHED SATA PORT SELECTOR and ATTACHED SATA DEVICE bits ... 688
Table 269 – PROGRAMMED MINIMUM PHYSICAL LINK RATE field and PROGRAMMED MAXIMUM PHYSICAL LINK RATE field ... 691
Table 270 – The HARDWARE MINIMUM PHYSICAL LINK RATE field and the HARDWARE MAXIMUM PHYSICAL LINK RATE field ... 691
Table 271 – ROUTING ATTRIBUTE field ... 692
Table 272 – PHY POWER CONDITION field ... 692
Table 273 – SAS POWER CAPABLE field ... 693
Table 274 – ATTACHED DEVICE NAME field ... 694
Table 275 – SELF-CONFIGURATION STATUS field ... 695
Table 276 – SELF-CONFIGURATION LEVELS COMPLETED field ... 695
Table 277 – REPORT PHY ERROR LOG request ... 698

Documents
Document Sharing Hub
Full document details: BS ISO/IEC 14776-262:2017

Table 278 – REPORT PHY ERROR LOG response ... 699
Table 279 – REPORT PHY SATA request ... 700
Table 280 – REPORT PHY SATA response ... 702
Table 281 – REPORT ROUTE INFORMATION request ... 704
Table 282 – REPORT ROUTE INFORMATION response ... 706
Table 283 – REPORT PHY EVENT request ... 707
Table 284 – REPORT PHY EVENT response ... 709
Table 285 – Phy event descriptor ... 710
Table 286 – DISCOVER LIST request ... 711
Table 287 – PHY FILTER field ... 712
Table 288 – DESCRIPTOR TYPE field ... 712
Table 289 – DISCOVER LIST response ... 713
Table 290 – SHORT FORMAT descriptor ... 715
Table 291 – REPORT PHY EVENT LIST request ... 716
Table 292 – REPORT PHY EVENT LIST response ... 717
Table 293 – Phy event list descriptor ... 719
Table 294 – REPORT EXPANDER ROUTE TABLE LIST request ... 720
Table 295 – REPORT EXPANDER ROUTE TABLE LIST response ... 722
Table 296 – Expander route table descriptor ... 724
Table 297 – CONFIGURE GENERAL request ... 725
Table 298 – STP SMP I_T NEXUS LOSS TIME field ... 727
Table 299 – CONFIGURE GENERAL response ... 727
Table 300 – ENABLE DISABLE ZONING request ... 728
Table 301 – SAVE field ... 729
Table 302 – ENABLE DISABLE ZONING field ... 729
Table 303 – ENABLE DISABLE ZONING response ... 729
Table 304 – ZONED BROADCAST request ... 730
Table 305 – BROADCAST TYPE field ... 731
Table 306 – ZONED BROADCAST response ... 731
Table 307 – ZONE LOCK request ... 733
Table 308 – ZONE LOCK response ... 734
Table 309 – ZONE ACTIVATE request ... 735
Table 310 – ZONE ACTIVATE response ... 735
Table 311 – ZONE UNLOCK request ... 736
Table 312 – ZONE UNLOCK response ... 737
Table 313 – CONFIGURE ZONE MANAGER PASSWORD request ... 738
Table 314 – SAVE field ... 739
Table 315 – CONFIGURE ZONE MANAGER PASSWORD response ... 739
Table 316 – CONFIGURE ZONE PHY INFORMATION request ... 740
Table 317 – SAVE field ... 741
Table 318 – Zone phy configuration descriptor ... 741
Table 319 – CONFIGURE ZONE PHY INFORMATION response ... 742
Table 320 – CONFIGURE ZONE PERMISSION TABLE request ... 743
Table 321 – NUMBER OF ZONE GROUPS field ... 744
Table 322 – SAVE field ... 744
Table 323 – Zone permission configuration descriptors ... 745
Table 324 – Zone permission configuration descriptor for source zone group for 128 zone groups ... 745
Table 325 – Zone permission configuration descriptor for source zone group for 256 zone groups ... 745
Table 326 – Zone permission configuration descriptor bit requirements ... 746
Table 327 – CONFIGURE ZONE PERMISSION TABLE response ... 746
Table 328 – CONFIGURE ROUTE INFORMATION request ... 747
Table 329 – CONFIGURE ROUTE INFORMATION response ... 748
Table 330 – PHY CONTROL request ... 750
Table 331 – PHY OPERATION field ... 752
Table 332 – PROGRAMMED MINIMUM PHYSICAL LINK RATE field and PROGRAMMED MAXIMUM PHYSICAL LINK RATE field ... 754
Table 333 – ENABLE SAS SLUMBER field ... 755
Table 334 – ENABLE SAS PARTIAL field ... 755

Documents
Document Sharing Hub
Full document details: BS ISO/IEC 14776-262:2017

Table 335 – ENABLE SATA SLUMBER field ... 755
Table 336 – ENABLE SATA PARTIAL field ... 756
Table 337 – PHY CONTROL response ... 756
Table 338 – PHY TEST FUNCTION request ... 758
Table 339 – PHY TEST FUNCTION field ... 759
Table 340 – PHY TEST FUNCTION PHYSICAL LINK RATE field ... 760
Table 341 – PHY TEST FUNCTION response ... 760
Table 342 – CONFIGURE PHY EVENT request ... 761
Table 343 – Phy event configuration descriptor ... 762
Table 344 – CONFIGURE PHY EVENT response ... 763
Table A.1 – JTPAT for RD+ and RD- ... 764
Table A.2 – CJTPAT ... 766
Table A.3 – CJTPAT with fixed content ... 770
Table C.1 – CRC examples ... 780
Table D.1 – Monte-Carlo simulation results ... 781
Table D.2 – Hash results for simple SAS addresses ... 784
Table D.3 – Hash results for realistic SAS addresses ... 784
Table D.4 – Hash results for a walking ones pattern ... 785
Table D.5 – Hash results for a walking zeros pattern ... 786
Table E.1 – Scrambler examples ... 789
Table E.2 – Initial scrambler output ... 790
Table G.1 – Minimum deletable primitive insertion rate examples ... 794
Table H.1 – Zone permission table example initial value ... 795
Table H.2 – CONFIGURE ZONE PERMISSION TABLE request example ... 796
Table H.3 – Zone permission table after processing first zone permission configuration descriptor ... 797
Table H.4 – Zone permission table after processing second zone permission configuration descriptor ... 797
Table J.1 – Column descriptions for connection examples ... 800
Table K.1 – Primitives with Hamming distance of at least 7 ... 820
Table K.2 – Primitives without Hamming distance of 7 ... 822
Table L.1 – Standards bodies ... 823

Documents
Document Sharing Hub
Full document details: BS ISO/IEC 14776-262:2017

INFORMATION TECHNOLOGY – SMALL COMPUTER SYSTEM INTERFACE (SCSI) –

Part 262: SAS PROTOCOL LAYER - 2 (SPL-2)

FOREWORD

1) ISO (the International Organization for Standardization) and IEC (the International Electrotechnical Commission) form the specialized system for worldwide standardization. National bodies that are members of ISO or IEC participate in the development of International Standards through technical committees established by the respective organization to deal with particular fields of technical activity. ISO and IEC technical committees collaborate in fields of mutual interest. Other international organizations, governmental and non-governmental, in liaison with ISO and IEC, also take part in the work. In the field of information technology, ISO and IEC have established a joint technical committee, ISO/IEC JTC 1.
2) The formal decisions or agreements of IEC and ISO on technical matters express, as nearly as possible, an international consensus of opinion on the relevant subjects since each technical committee has representation from all interested IEC National Committees and ISO member bodies.
3) IEC, ISO and ISO/IEC publications have the form of recommendations for international use and are accepted by IEC National Committees and ISO member bodies in that sense. While all reasonable efforts are made to ensure that the technical content of IEC, ISO and ISO/IEC publications is accurate, IEC or ISO cannot be held responsible for the way in which they are used or for any misinterpretation by any end user.
4) In order to promote international uniformity, IEC National Committees and ISO member bodies undertake to apply IEC, ISO and ISO/IEC publications transparently to the maximum extent possible in their national and regional publications. Any divergence between any ISO, IEC or ISO/IEC publication and the corresponding national or regional publication should be clearly indicated in the latter.
5) ISO and IEC do not provide any attestation of conformity. Independent certification bodies provide conformity assessment services and, in some areas, access to IEC marks of conformity. ISO or IEC are not responsible for any services carried out by independent certification bodies.
6) All users should ensure that they have the latest edition of this publication.
7) No liability shall attach to IEC or ISO or its directors, employees, servants or agents including individual experts and members of their technical committees and IEC National Committees or ISO member bodies for any personal injury, property damage or other damage of any nature whatsoever, whether direct or indirect, or for costs (including legal fees) and expenses arising out of the publication of, use of, or reliance upon, this ISO/IEC publication or any other IEC, ISO or ISO/IEC publications.
8) Attention is drawn to the normative references cited in this publication. Use of the referenced publications is indispensable for the correct application of this publication.
9) Attention is drawn to the possibility that some of the elements of this ISO/IEC publication may be the subject of patent rights. ISO and IEC shall not be held responsible for identifying any or all such patent rights.

International Standard ISO/IEC 14776-262 was prepared by subcommittee 25: Interconnection of information technology equipment, of ISO/IEC joint technical committee 1: Information technology.

The list of all currently available parts of the ISO/IEC 14776 series, under the general title *Information technology – Small computer system interface (SCSI)*, can be found on the IEC web site.

This International Standard has been approved by vote of the member bodies and the voting results may be obtained from the address given on the second title page.

This publication has been drafted in accordance with the ISO/IEC Directives, Part 2, except as described in 3.4.

Documents
Document Sharing Hub
Full document details: BS ISO/IEC 14776-262:2017

INFORMATION TECHNOLOGY – SMALL COMPUTER SYSTEM INTERFACE (SCSI) –

Part 262: SAS PROTOCOL LAYER - 2 (SPL-2)

INTRODUCTION

General

The SCSI family of standards provides for many different transport protocols that define the rules for exchanging information between different SCSI devices. This standard defines the rules for exchanging information between SCSI devices using a serial interconnect. Other SCSI transport protocol standards define the rules for exchanging information between SCSI devices using other interconnects.

The following figure shows the organization of the layers of this standard.

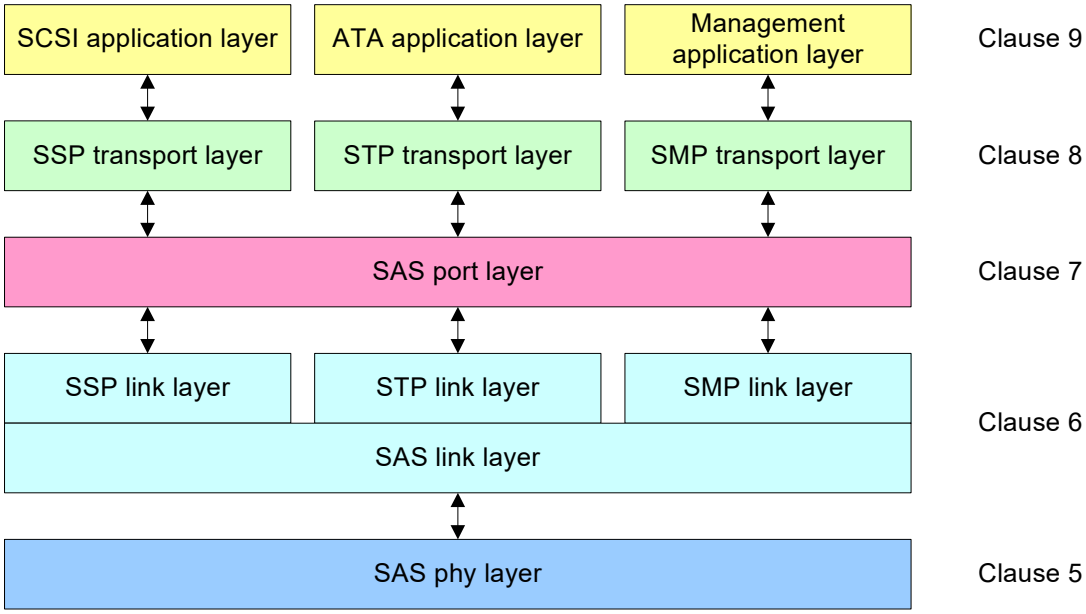

Figure 1 – Organization of this standard

Documents
Document Sharing Hub
Full document details: BS ISO/IEC 14776-262:2017

SCSI standards family

Figure 2 shows the relationship of this standard to the other standards and related projects in the SCSI family of standards.

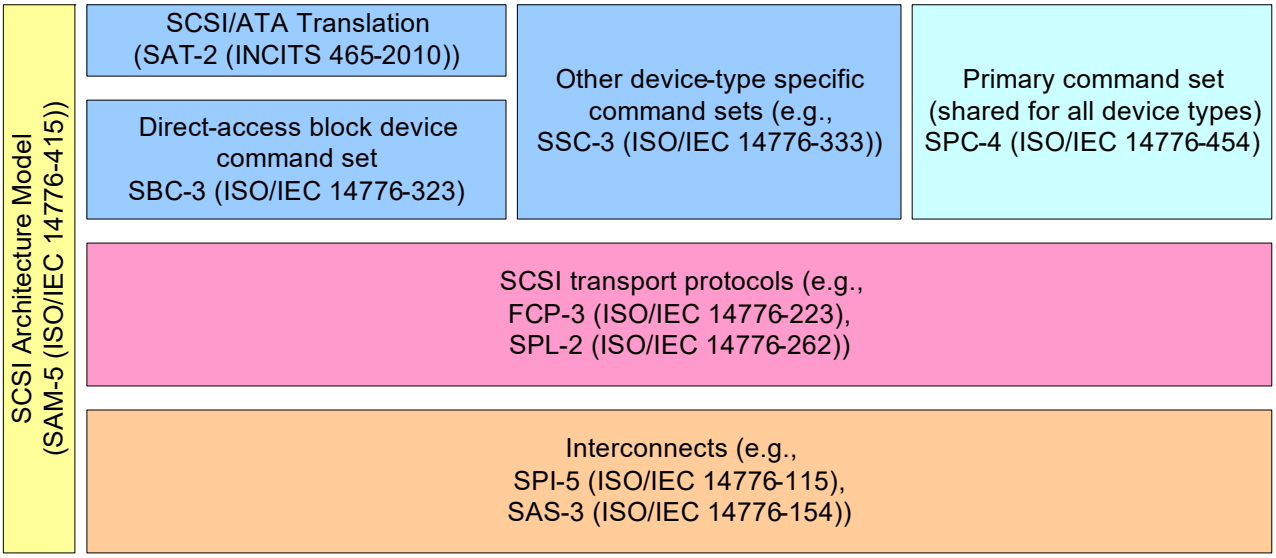

Figure 2 – SCSI document relationships

This standard also defines the rules for exchanging information between ATA hosts and ATA devices using the same serial interconnect. Other ATA transport protocol standards define the rules for exchanging information between ATA hosts and ATA devices using other interconnects.

Figure 3 shows the relationship of this standard to other standards and related projects in the ATA family of standards.

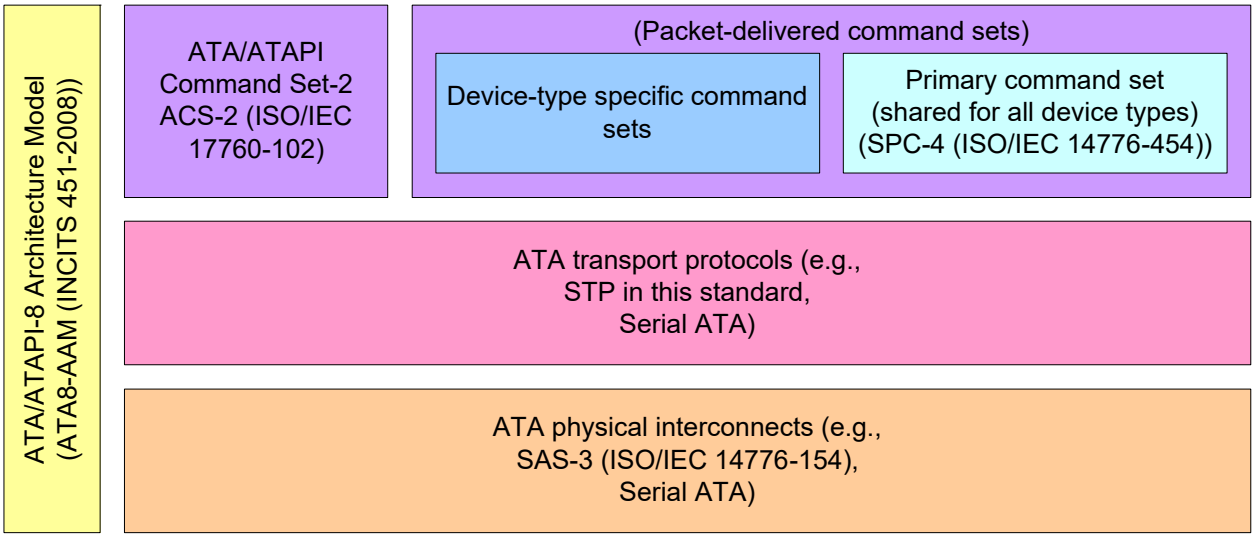

Figure 3 – ATA document relationships

Figure 2 and figure 3 show the general relationship of the documents to one another, and do not imply any hierarchy, protocol stack or system architecture relationship.

These standards specify the interfaces, functions and operations necessary to ensure interoperability between conforming implementations. This standard is a functional description. Conforming implementations may employ any design technique that does not violate interoperability.

Documents
Document Sharing Hub
Full document details: BS ISO/IEC 14776-262:2017

INFORMATION TECHNOLOGY –
SMALL COMPUTER SYSTEM INTERFACE (SCSI) –

Part 262: SAS Protocol Layer - 2 (SPL-2)

1 Scope

This standard defines the protocol layer of the Serial Attached SCSI (SAS) interconnect and three transport protocols that use the SAS interconnect:

a) Serial SCSI Protocol (SSP): a mapping of SCSI supporting multiple initiators and targets;
b) Serial ATA Tunneled Protocol (STP): a mapping of Serial ATA expanded to support multiple initiators and targets; and
c) Serial Management Protocol (SMP): a management protocol.

Documents
Document Sharing Hub
Full document details: BS ISO/IEC 14776-262:2017

2 Normative references

The following documents are referred to in the text in such a way that some or all of their content constitutes requirements of this document. For dated references, only the edition cited applies. For undated references, the latest edition of the referenced document (including any amendments) applies.

Additional availability contact information is provided in Annex L.

ISO/IEC 14776-151, *Information technology – Small Computer System Interface (SCSI) – Part 151*: *Serial Attached SCSI - 1.1 (SAS-1.1)*

ISO/IEC 14776-372, *Information technology – Small Computer System Interface (SCSI) – Part 372*: *SCSI Enclosure Services - 2 (SES-2)*

ISO/IEC 17760-102, *Information technology – AT Attachment – Part 102: ATA/ATAPI Command Set - 2 (ACS-2)*

INCITS 451-2008, *AT Attachment - 8 ATA/ATAPI Architecture Model (ATA8-AAM)*

INCITS 465-2010, *SCSI/ATA Translation - 2 (SAT-2)*

INCITS 514-2014, *SCSI Block Commands - 3 (SBC-3)*

INCITS 515-2016, *SCSI Architecture Model - 5 (SAM-5)*

INCITS 513-2015, *SCSI Primary Commands - 4 (SPC-4)*

INCITS 519-2014, *Serial Attached SCSI - 3 (SAS-3)*

For information on the current status of the listed documents, or regarding availability, contact the indicated organization.

Serial AT Attachment Revision 3.1 (SATA). 18-July-2011[1]

SFF-8485, *Serial GPIO (SGPIO) Bus*[2]

1.For information on the current status of Serial ATA documents, contact the Serial ATA International Organization (see http://www.sata-io.org).

2.For more information on the current status of SFF documents, contact the SFF Committee at 408-867-6630 (phone), or 408-867-2115 (fax). To obtain copies of these documents, contact the SFF Committee at 14426 Black Walnut Court, Saratoga, CA 95070 at 408-867-6630 (phone) or 408-741-1600 (fax) or see http://www.sffcommittee.org.

Documents
Document Sharing Hub

Full document details: BS ISO/IEC 14776-262:2017

3 Terms, definitions, symbols, abbreviations, keywords, and conventions

3.1 Terms and definitions

For the purposes of this document the following terms and definitions apply.

ISO and IEC maintain terminological databases for use in standardization at the following addresses:

"IEC Electropedia: available at http://www.electropedia.org/
"ISO Online browsing platform: available at http://www.iso.org/obp

3.1.1
8b10b coding
coding scheme that represents an 8-bit byte (i.e., a control byte or data byte) as a 10-bit character (i.e., a control character or data character)

Note 1 to entry: See 5.2.

3.1.2
8b10b encoding
method of encoding an 8-bit byte (i.e., a control byte or data byte) into a 10-bit character (i.e., a control character or data character)

Note 1 to entry: See 5.2.

3.1.3
10b8b decoding
method for decoding a 10-bit character (i.e., a control character or data character) into an 8-bit byte (i.e., a control byte or data byte)

Note 1 to entry: See 5.2.

3.1.4
active cable assembly
cable assembly (see SAS-3) that requires power for internal circuitry used in the transmission of the signal through the cable assembly

Note 1 to entry: See SAS-3.

3.1.5
active phy power condition
normal power condition for a SAS phy or expander phy

Note 1 to entry: See 4.10.1.2.

3.1.6
active zone manager
zone manager (see 3.1.253) that locks a zoning expander device (see 3.1.257)

Note 1 to entry: See 4.8.6.

3.1.7
affiliation
STP target port (see 3.1.224) state of limiting acceptance of connection requests to those from one or more STP initiator ports (see 3.1.219)

Note 1 to entry: See 6.19.4.

Documents
Document Sharing Hub
Full document details: BS ISO/IEC 14776-262:2017

3.1.8
affiliation context
set of registers maintained by an STP target port for an STP initiator port holding an affiliation

Note 1 to entry: See 6.19.4.

3.1.9
aggregation
form of association that defines a whole-part relationship between the whole (i.e., aggregate) class and its parts

Note 1 to entry: This definition only applies when used in relation to UML.

Note 2 to entry: See 3.5.

3.1.10
association
relationship between two or more classes that specifies connections among their objects

Note 1 to entry: This definition only applies when used in relation to UML.

Note 2 to entry: An association is a relationship that specifies that objects of one class are connected to objects of another class.

Note 3 to entry: See 3.5.

3.1.11
attached
attribute of a class used when an instance of that class is only accessible over a service delivery subsystem

3.1.12
attached SAS address
SAS address (see 3.1.164) of the attached phy or the SAS address of the STP target port in an STP SATA bridge (see 4.5.2)

Note 1 to entry: For example, the SAS address of an attached phy may be received in the incoming IDENTIFY address frame during the initialization sequence (see 4.1.2),

3.1.13
attribute
named property of a class that describes a range of values that its objects may hold

Note 1 to entry: This definition only applies when used in relation to UML.

Note 2 to entry: See 3.5.

3.1.14
AT Attachment
ATA
standard for the internal attachment of storage devices to hosts

Note 1 to entry: See ATA8-AAM.

3.1.15
ATA device
storage peripheral that processes ATA commands and device management functions

Note 1 to entry: Analogous to a SCSI target device (see 3.1.191).

Note 2 to entry: See ATA8-AAM.

Documents
Document Sharing Hub
Full document details: BS ISO/IEC 14776-262:2017

3.1.16
ATA domain
I/O system consisting of an ATA host and one or more ATA devices that communicate with one another by means of a service delivery subsystem (see 3.1.199)

Note 1 to entry: Analogous to a SCSI domain (see 3.1.187).

Note 2 to entry: See ATA8-AAM.

3.1.17
ATA host
host device that originates requests to be processed by an ATA device

Note 1 to entry: Analogous to a SCSI initiator device (see 3.1.188).

Note 2 to entry: See ATA8-AAM.

3.1.18
big-endian
format for storage or transmission of binary data in which the most significant byte appears first

Note 1 to entry: In a multi-byte value, the byte containing the most significant bit is stored in the lowest memory address and transmitted first, and the byte containing the least significant bit is stored in the highest memory address and transmitted last (e.g., for the value 0080h, the byte containing 00h is stored in the lowest memory address, and the byte containing 80h is stored in the highest memory address).

3.1.19
bi-phase mark code
BMC
encoding in which a transition occurs at the beginning of each TTIU bit cell (see 3.1.242), a one is represented by a transition in the middle of the TTIU bit cell, and a zero is represented by no transition within the TTIU bit cell

Note 1 to entry: See 5.8.

3.1.20
bit cell time
time for transmitting a phy capabilities bit during SNW-3 (see 5.10.4.2.3.3)

3.1.21
Broadcast
information about an event in the SAS domain, communicated between phys with the BROADCAST primitive sequence (see 6.2.6.4) and/or the SMP ZONED BROADCAST function (see 9.4.3.20)

Note 1 to entry: See 4.1.13.

3.1.22
Broadcast propagation processor
BPP
object within an expander function (see 3.1.66) that manages Broadcasts (see 3.1.21)

Note 1 to entry: See 4.5.5.

3.1.23
burst time
part of an OOB signal where the OOB burst is transmitted

Note 1 to entry: See SAS-3.

Documents
Document Sharing Hub
Full document details: BS ISO/IEC 14776-262:2017

3.1.24
byte
sequence of eight contiguous bits considered as an unit

3.1.25
character
sequence of ten contiguous bits considered as an unit

Note 1 to entry: A byte is encoded as a character using 8b10b coding (see 5.2)

3.1.26
class
description of a set of objects that share the same attributes, operations relationships, and semantics

Note 1 to entry: Classes may have attributes and may support operations.

3.1.27
class diagram
diagram that shows a collection of classes and their contents and relationships

Note 1 to entry: See 3.5.

3.1.28
command descriptor block
CDB
structure used to communicate a command from a SCSI application client to a SCSI device server

Note 1 to entry: See SAM-5.

3.1.29
commonly supported setting
supported settings bit (see table 52) with a value set to one by both the phy and the attached phy as transmitted during the most recent SNW-3

3.1.30
compliant jitter tolerance pattern
CJTPAT
test pattern for jitter testing

Note 1 to entry: See A.2 and SAS-3.

3.1.31
configuration subprocess
subprocess invoked from the discover process (see 3.1.55) to configure an externally configurable expander device (see 3.1.73)

Note 1 to entry: See 4.7.

3.1.32
confirmation
information passed from a lower layer state machine to a higher layer state machine, usually responding to a request from that higher layer state machine

Note 1 to entry: For an example of a response from a peer layer state machine see figure 41 in 4.5.6.2.

Note 2 to entry: See 3.6.

Documents
Document Sharing Hub
Full document details: BS ISO/IEC 14776-262:2017

3.1.33
connection
temporary association between a SAS initiator port and a SAS target port using a pathway (see 3.1.136)

Note 1 to entry: See 4.1.12 and 6.14.

3.1.34
connection rate
effective rate of dwords through the pathway (see 3.1.136) between a SAS initiator phy and a SAS target phy, established through the connection request

3.1.35
connection request
request to establish a connection originated by a SAS phy (see 3.1.170) using an OPEN address frame (see 6.8.3)

Note 1 to entry: See 6.14.2.1.

3.1.36
constraint
mechanism for specifying semantics or conditions that are maintained as true between entities

Note 1 to entry: This definition only applies when used in relation to UML.

Note 2 to entry: An example of a constraint is a required condition between associations.

Note 3 to entry: See 3.5.

3.1.37
control byte
byte containing control information defined in table 49

Note 1 to entry: See 5.3.7.

3.1.38
control character
Kxx.y
character containing control information defined in table 49

Note 1 to entry: See 5.3.7.

3.1.39
cyclic redundancy check
CRC
error checking mechanism that checks data integrity by computing a polynomial algorithm based checksum

Note 1 to entry: See 6.5.

3.1.40
D.C. idle
differential signal level that is nominally 0 V peak-to-peak

Note 1 to entry: See SAS-3.

3.1.41
D.C. mode
mode in which D.C. idle is used, during the idle time and negation time of an OOB signal (see SAS-3), and during the RCDT time of speed negotiation windows (see 5.10.4.2.2)

Documents
Document Sharing Hub
Full document details: BS ISO/IEC 14776-262:2017

3.1.42
data byte
byte containing data information defined in table 48

Note 1 to entry: See 5.3.6.

3.1.43
data character
Dxx.y
character containing data information defined in table 48 (see 5.2)

Note 1 to entry: See 5.3.6.

3.1.44
data dword
dword containing four data bytes or four data characters with correct disparity

3.1.45
deadlock
condition in which two or more processes (e.g., connection requests) are waiting on the others to complete, resulting in none of the processes completing

3.1.46
deletable primitive
primitive which may be deleted by a receiver instead of being placed into its elasticity buffer (see 6.3)

Note 1 to entry: See 6.2.5.

3.1.47
dependency
relationship between two classes where a change to one class (i.e., the independent class) may cause a change in the other class (i.e., the dependent class)

Note 1 to entry: This definition only applies when used in relation to UML.

Note 2 to entry: See 3.5.

3.1.48
device name
worldwide unique name for a device within a transport protocol

Note 1 to entry: See 4.2.6.

3.1.49
device server
object that processes SCSI commands (see SAM-5), ATA commands (see ATA8-AAM), or SMP functions

Note 1 to entry: See 4.1.5.

3.1.50
differential high signal level
Tx+ signal of a transmitter circuit (see SAS-3) is higher than the voltage measured on the Tx- signal of a transmitter circuit

3.1.51
differential low signal level
Tx+ signal of a transmitter circuit (see SAS-3) is lower than the voltage measured on the Tx- signal of a transmitter circuit

Documents
Document Sharing Hub
Full document details: BS ISO/IEC 14776-262:2017

3.1.52
direct current
D.C.
non-A.C. component of a signal

Note 1 to entry: See SAS-3.

3.1.53
direct routing attribute
attribute of an expander phy that indicates that the expander phy may be used by the ECM (see 3.1.63) to route a connection request to an end device

Note 1 to entry: See 4.5.7.1.

3.1.54
direct routing method
method the ECM (see 3.1.63) uses to route connection requests to an attached end device or an attached expander device

Note 1 to entry: See 4.5.7.1.

3.1.55
discover process
process performed by a management application client to discover all the SAS devices and expander devices in the SAS domain

Note 1 to entry: The discover process invokes the configuration subprocess (see 3.1.31) as needed.

Note 2 to entry: See 4.6.

3.1.56
disparity
difference between the number of ones and zeros in a character (see 5.2)

3.1.57
domain
I/O system consisting of devices that communicate with one another by means of a service delivery subsystem

Note 1 to entry: Examples of domains are a SAS domain (see 3.1.166), a SCSI domain (see 3.1.187), or an ATA domain (see 3.1.16)

Note 2 to entry: See 4.1.9.

3.1.58
dword
sequence of four contiguous bytes or four contiguous characters considered as an unit

Note 1 to entry: The meaning depends on the context (e.g., when discussing the bits being transmitted over a physical link, dword represents four characters (i.e., 40 bits) and when discussing the contents of a frame before 8b10b encoding (see 3.1.2) or after 10b8b decoding (see 3.1.3), dword represents four bytes (i.e., 32 bits)).

3.1.59
dword synchronization
detection of an incoming stream of dwords from a physical link by a phy

Note 1 to entry: See 5.13.

Documents
Document Sharing Hub
Full document details: BS ISO/IEC 14776-262:2017