BS ISO/IEC 14776-323:2017

BSI Standards Publication

Information technology – Small computer system interface (SCSI) –

Part 323: SCSI Block Commands – 3 (SBC-3)

Documents
Document Sharing Hub

Full document details: BS ISO/IEC 14776-323:2017

National foreword

This British Standard is the UK implementation of ISO/IEC 14776-323:2017.

The UK participation in its preparation was entrusted to Technical Committee I/-, Miscellaneous standards materials and chemicals.

A list of organizations represented on this committee can be obtained on request to its secretary.

This publication does not purport to include all the necessary provisions of a contract. Users are responsible for its correct application.

© The British Standards Institution 2017.
Published by BSI Standards Limited 2017

ISBN 978 0 580 86836 8

ICS 35.200

Compliance with a British Standard cannot confer immunity from legal obligations.

This British Standard was published under the authority of the Standards Policy and Strategy Committee on 28 February 2017.

Amendments/corrigenda issued since publication

Date	Text affected

Documents
Document Sharing Hub

Full document details: BS ISO/IEC 14776-323:2017

ISO/IEC 14776-323

Edition 1.0 2017-01

INTERNATIONAL STANDARD

colour inside

Information technology – Small computer system interface (SCSI) – Part 323: SCSI Block Commands – 3 (SBC-3)

ISO/IEC 14776-323:2017-01(en)

AVA Documents
Document Sharing Hub

Full document details: BS ISO/IEC 14776-323:2017

THIS PUBLICATION IS COPYRIGHT PROTECTED
Copyright © 2017 ISO/IEC, Geneva, Switzerland

All rights reserved. Unless otherwise specified, no part of this publication may be reproduced or utilized in any form or by any means, electronic or mechanical, including photocopying and microfilm, without permission in writing from either IEC or IEC's member National Committee in the country of the requester. If you have any questions about ISO/IEC copyright or have an enquiry about obtaining additional rights to this publication, please contact the address below or your local IEC member National Committee for further information.

IEC Central Office
3, rue de Varembé
CH-1211 Geneva 20
Switzerland

Tel.: +41 22 919 02 11
Fax: +41 22 919 03 00
info@iec.ch
www.iec.ch

About the IEC
The International Electrotechnical Commission (IEC) is the leading global organization that prepares and publishes International Standards for all electrical, electronic and related technologies.

About IEC publications
The technical content of IEC publications is kept under constant review by the IEC. Please make sure that you have the latest edition, a corrigenda or an amendment might have been published.

IEC Catalogue - webstore.iec.ch/catalogue
The stand-alone application for consulting the entire bibliographical information on IEC International Standards, Technical Specifications, Technical Reports and other documents. Available for PC, Mac OS, Android Tablets and iPad.

IEC publications search - www.iec.ch/searchpub
The advanced search enables to find IEC publications by a variety of criteria (reference number, text, technical committee,…). It also gives information on projects, replaced and withdrawn publications.

IEC Just Published - webstore.iec.ch/justpublished
Stay up to date on all new IEC publications. Just Published details all new publications released. Available online and also once a month by email.

Electropedia - www.electropedia.org
The world's leading online dictionary of electronic and electrical terms containing 20 000 terms and definitions in English and French, with equivalent terms in 15 additional languages. Also known as the International Electrotechnical Vocabulary (IEV) online.

IEC Glossary - std.iec.ch/glossary
65 000 electrotechnical terminology entries in English and French extracted from the Terms and Definitions clause of IEC publications issued since 2002. Some entries have been collected from earlier publications of IEC TC 37, 77, 86 and CISPR.

IEC Customer Service Centre - webstore.iec.ch/csc
If you wish to give us your feedback on this publication or need further assistance, please contact the Customer Service Centre: csc@iec.ch.

Documents
Document Sharing Hub

Full document details: BS ISO/IEC 14776-323:2017

ISO/IEC 14776-323

Edition 1.0 2017-01

INTERNATIONAL STANDARD

colour inside

Information technology – Small computer system interface (SCSI) – Part 323: SCSI Block Commands – 3 (SBC-3)

INTERNATIONAL
ELECTROTECHNICAL
COMMISSION

ICS 35.200

ISBN 978-2-8322-3721-2

Warning! Make sure that you obtained this publication from an authorized distributor.

Documents
Document Sharing Hub

Full document details: BS ISO/IEC 14776-323:2017

FOREWORD 5
INTRODUCTION 7
General 7
SCSI standards family 7

1 Scope 8

2 Normative references 8

3 Terms, definitions, symbols, abbreviations, keywords, and conventions 9
3.1 Terms and definitions 9
3.2 Symbols 19
3.3 Abbreviations 19
3.4 Keywords 20
3.5 Editorial conventions 21
3.6 Numeric and character conventions 22
3.6.1 Numeric conventions 22
3.6.2 Units of measure 22
3.7 State machine conventions 24

4 Direct access block device type model 25
4.1 Direct access block device type model introduction 25
4.2 Direct access block device type model 26
4.2.1 Direct access block device type model overview 26
4.2.2 Logical block access command types 26
4.2.3 Logical block access operation types 26
4.3 Media examples 26
4.3.1 Media examples overview 26
4.3.2 Rotating media 27
4.3.3 Memory media 27
4.4 Removable media 27
4.5 Logical Blocks 28
4.6 Physical blocks 29
4.7 Logical block provisioning 33
4.7.1 Logical block provisioning overview 33
4.7.2 Fully provisioned logical unit 34
4.7.3 Logical block provisioning management 34
4.7.3.1 Logical block provisioning management overview 34
4.7.3.2 Resource provisioned logical unit 34
4.7.3.3 Thin provisioned logical unit 35
4.7.3.4 Unmapping LBAs 35
4.7.3.4.1 Processing unmap requests 35
4.7.3.4.2 Unmap operations 35
4.7.3.4.3 WRITE SAME command and unmap operations 36
4.7.3.5 Autonomous LBA transitions 37
4.7.3.6 Thin provisioned logical unit resource exhaustion considerations 37
4.7.3.7 Logical block provisioning thresholds 37
4.7.3.7.1 Logical block provisioning thresholds overview 37
4.7.3.7.2 Logical block provisioning armed decreasing thresholds 38
4.7.3.7.3 Logical block provisioning armed increasing thresholds 39
4.7.3.7.4 Logical block provisioning threshold notification 40
4.7.4 LBP (logical block provisioning) state machine 40
4.7.4.1 LBP state machine overview 40
4.7.4.2 LBP state machine for thin provisioned logical units supporting anchored LBAs 41
4.7.4.3 LBP state machine for thin provisioned logical units not supporting anchored LBAs 41
4.7.4.4 LBP state machine for resource provisioned logical units 42
4.7.4.5 Performing read operations with respect to logical block provisioning 42
4.7.4.6 LBP1:Mapped state 44

Documents
Document Sharing Hub
Full document details: BS ISO/IEC 14776-323:2017

4.7.4.6.1 LBP1:Mapped state description ... 44
4.7.4.6.2 Transition LBP1:Mapped to LBP2:Deallocated ... 44
4.7.4.6.3 Transition LBP1:Mapped to LBP3:Anchored ... 44
4.7.4.7 LBP2:Deallocated state ... 44
4.7.4.7.1 LBP2:Deallocated state description ... 44
4.7.4.7.2 Transition LBP2:Deallocated to LBP1:Mapped ... 44
4.7.4.7.3 Transition LBP2:Deallocated to LBP3:Anchored ... 45
4.7.4.8 LBP3:Anchored state ... 45
4.7.4.8.1 LBP3:Anchored state description ... 45
4.7.4.8.2 Transition LBP3:Anchored to LBP1:Mapped ... 45
4.7.4.8.3 Transition LBP3:Anchored to LBP2:Deallocated ... 45
4.8 Data de-duplication ... 45
4.9 Ready state ... 45
4.10 Initialization ... 46
4.11 Sanitize operations ... 46
4.11.1 Sanitize operations overview ... 46
4.11.2 Performing a sanitize operation ... 47
4.11.3 Completing a sanitize operation ... 48
4.12 Write protection ... 49
4.13 Medium defects ... 49
4.13.1 Medium defects overview ... 49
4.13.2 Generation of defect lists ... 52
4.14 Write and unmap failures ... 53
4.15 Caches ... 53
4.15.1 Caches overview ... 53
4.15.2 Read caching ... 53
4.15.3 Write caching ... 53
4.15.4 Command interactions with caches ... 54
4.15.5 Write operation and write medium operation interactions with caches ... 54
4.15.6 Read operation and read medium operation interactions with caches ... 54
4.15.7 Verify medium operation interactions with caches ... 55
4.15.8 Unmap operation interactions with caches ... 55
4.15.9 Power loss effects on caches ... 55
4.16 Implicit head of queue command processing ... 56
4.17 Reservations ... 56
4.18 Error reporting ... 58
4.18.1 Error reporting overview ... 58
4.18.2 Processing pseudo unrecovered errors ... 60
4.18.3 Block commands sense data descriptor ... 61
4.18.4 User data segment referral sense data descriptor ... 62
4.18.5 Direct-access block device sense data descriptor ... 64
4.19 Model for XOR commands ... 65
4.19.1 Model for XOR commands overview ... 65
4.19.2 SCSI storage array device supervised XOR operations ... 66
4.19.2.1 SCSI storage array device supervised XOR operations overview ... 66
4.19.2.2 Update write operation ... 66
4.19.2.3 Regenerate operation ... 66
4.19.2.4 Rebuild operation ... 67
4.19.3 Array subsystem considerations ... 67
4.19.3.1 Array subsystem considerations overview ... 67
4.19.3.2 Access to an inconsistent stripe ... 67
4.20 Rebuild assist mode ... 67
4.20.1 Rebuild assist mode overview ... 67
4.20.2 Enabling rebuild assist mode ... 68
4.20.3 Using the rebuild assist mode ... 68
4.20.3.1 Using rebuild assist mode overview ... 68
4.20.3.2 Unpredicted unrecovered read error ... 68
4.20.3.3 Predicted unrecovered read error ... 69

Documents
Document Sharing Hub
Full document details: BS ISO/IEC 14776-323:2017

4.20.3.4 Unpredicted unrecovered write error ... 69
4.20.3.5 Predicted unrecovered write error ... 69
4.20.4 Disabling the rebuild assist mode ... 70
4.20.5 Testing rebuild assist mode ... 70
4.21 START STOP UNIT and power conditions ... 70
4.21.1 START STOP UNIT and power conditions overview ... 70
4.21.2 Processing of concurrent START STOP UNIT commands ... 70
4.21.3 Managing logical block access commands during a change to the active power condition ... 71
4.21.4 Stopped power condition ... 71
4.21.5 START STOP UNIT and power condition state machine ... 71
4.21.5.1 START STOP UNIT and power condition state machine overview ... 71
4.21.5.2 SSU_PC0:Powered_On state ... 73
4.21.5.2.1 SSU_PC0:Powered_On state description ... 73
4.21.5.2.2 Transition SSU_PC0:Powered_On to SSU_PC4:Active_Wait ... 74
4.21.5.2.3 Transition SSU_PC0:Powered_On to SSU_PC8:Stopped ... 74
4.21.5.3 SSU_PC1:Active state ... 74
4.21.5.3.1 SSU_PC1:Active state description ... 74
4.21.5.3.2 Transition SSU_PC1:Active to SSU_PC5:Wait_Idle ... 74
4.21.5.3.3 Transition SSU_PC1:Active to SSU_PC6:Wait_Standby ... 74
4.21.5.3.4 Transition SSU_PC1:Active to SSU_PC10:Wait_Stopped ... 75
4.21.5.4 SSU_PC2:Idle state ... 75
4.21.5.4.1 SSU_PC2:Idle state description ... 75
4.21.5.4.2 Transition SSU_PC2:Idle to SSU_PC4:Active_Wait ... 75
4.21.5.4.3 Transition SSU_PC2:Idle to SSU_PC5:Wait_Idle ... 75
4.21.5.4.4 Transition SSU_PC2:Idle to SSU_PC6:Wait_Standby ... 76
4.21.5.4.5 Transition SSU_PC2:Idle to SSU_PC7:Idle_Wait ... 76
4.21.5.4.6 Transition SSU_PC2:Idle to SSU_PC10:Wait_Stopped ... 76
4.21.5.5 SSU_PC3:Standby state ... 76
4.21.5.5.1 SSU_PC3:Standby state description ... 76
4.21.5.5.2 Transition SSU_PC3:Standby to SSU_PC4:Active_Wait ... 76
4.21.5.5.3 Transition SSU_PC3:Standby to SSU_PC6:Wait_Standby ... 77
4.21.5.5.4 Transition SSU_PC3:Standby to SSU_PC7:Idle_Wait ... 77
4.21.5.5.5 Transition SSU_PC3:Standby to SSU_PC9:Standby_Wait ... 77
4.21.5.5.6 Transition SSU_PC3:Standby to SSU_PC10:Wait_Stopped ... 78
4.21.5.6 SSU_PC4:Active_Wait state ... 78
4.21.5.6.1 SSU_PC4:Active_Wait state description ... 78
4.21.5.6.2 Transition SSU_PC4:Active_Wait to SSU_PC1:Active ... 79
4.21.5.7 SSU_PC5:Wait_Idle state ... 79
4.21.5.7.1 SSU_PC5:Wait_Idle state description ... 79
4.21.5.7.2 Transition SSU_PC5:Wait_Idle to SSU_PC2:Idle ... 79
4.21.5.8 SSU_PC6:Wait_Standby state ... 79
4.21.5.8.1 SSU_PC6:Wait_Standby state description ... 79
4.21.5.8.2 Transition SSU_PC6:Wait_Standby to SSU_PC3:Standby ... 79
4.21.5.9 SSU_PC7:Idle_Wait state ... 79
4.21.5.9.1 SSU_PC7:Idle_Wait state description ... 79
4.21.5.9.2 Transition SSU_PC7:Idle_Wait to SSU_PC2:Idle ... 80
4.21.5.10 SSU_PC8:Stopped state ... 80
4.21.5.10.1 SSU_PC8:Stopped state description ... 80
4.21.5.10.2 Transition SSU_PC8:Stopped to SSU_PC4:Active_Wait ... 80
4.21.5.10.3 Transition SSU_PC8:Stopped to SSU_PC7:Idle_Wait ... 81
4.21.5.10.4 Transition SSU_PC8:Stopped to SSU_PC9:Standby_Wait ... 81
4.21.5.11 SSU_PC9:Standby_Wait state ... 81
4.21.5.11.1 SSU_PC9:Standby_Wait state description ... 81
4.21.5.11.2 Transition SSU_PC9:Standby_Wait to SSU_PC3:Standby ... 81
4.21.5.12 SSU_PC10:Wait_Stopped state ... 82
4.21.5.12.1 SSU_PC10:Wait_Stopped state description ... 82
4.21.5.12.2 Transition SSU_PC10:Wait_Stopped to SSU_PC8:Stopped ... 82
4.22 Protection information model ... 82

Documents
Document Sharing Hub
Full document details: BS ISO/IEC 14776-323:2017

4.22.1 Protection information overview ... 82
4.22.2 Protection types ... 82
4.22.2.1 Protection types overview ... 82
4.22.2.2 Type 0 protection ... 83
4.22.2.3 Type 1 protection ... 84
4.22.2.4 Type 2 protection ... 84
4.22.2.5 Type 3 protection ... 85
4.22.3 Protection information format ... 85
4.22.4 Logical block guard ... 89
4.22.4.1 Logical block guard overview ... 89
4.22.4.2 CRC generation ... 89
4.22.4.3 CRC checking ... 90
4.22.4.4 CRC test cases ... 90
4.22.5 Application of protection information ... 90
4.22.6 Protection information and commands ... 91
4.23 Grouping function ... 91
4.24 Background scan operations ... 91
4.24.1 Background scan overview ... 91
4.24.2 Background pre-scan operations ... 92
4.24.2.1 Enabling background pre-scan operations ... 92
4.24.2.2 Suspending and resuming background pre-scan operations ... 92
4.24.2.3 Halting background pre-scan operations ... 93
4.24.3 Background medium scan ... 93
4.24.3.1 Enabling background medium scan operations ... 93
4.24.3.2 Suspending and resuming background medium scan operations ... 94
4.24.3.3 Halting background medium scan operations ... 94
4.24.4 Interpreting the logged background scan results ... 95
4.25 Association between commands and CbCS permission bits ... 95
4.26 Deferred microcode activation ... 97
4.27 Model for uninterrupted sequences on LBA ranges ... 97
4.28 Referrals ... 97
4.28.1 Referrals overview ... 97
4.28.2 Discovering referrals ... 98
4.28.3 Referrals in sense data ... 99
4.29 ORWRITE commands ... 100
4.29.1 ORWRITE commands overview ... 100
4.29.2 ORWgeneration code ... 100
4.29.2.1 ORWgeneration code overview ... 100
4.29.2.2 ORWgeneration code processing ... 101
4.29.3 Change generation and clear operation ... 101
4.29.4 Set operation ... 103
4.30 Block device ROD token operations ... 104
4.30.1 Block device ROD token operations overview ... 104
4.30.2 POPULATE TOKEN command and WRITE USING TOKEN command completion ... 105
4.30.3 Block device specific ROD tokens ... 105
4.30.4 Block device zero ROD token ... 106
4.30.5 ROD token device type specific data ... 106

5 Commands for direct access block devices ... 108
5.1 Commands for direct access block devices overview ... 108
5.2 COMPARE AND WRITE command ... 111
5.3 FORMAT UNIT command ... 113
5.3.1 FORMAT UNIT command overview ... 113
5.3.2 FORMAT UNIT parameter list ... 117
5.3.2.1 FORMAT UNIT parameter list overview ... 117
5.3.2.2 Parameter list header ... 117
5.3.2.3 Initialization pattern descriptor ... 122
5.4 GET LBA STATUS command ... 123

Documents
Document Sharing Hub
Full document details: BS ISO/IEC 14776-323:2017

5.4.1 GET LBA STATUS command overview ... 123
5.4.2 GET LBA STATUS parameter data ... 125
5.4.2.1 GET LBA STATUS parameter data overview ... 125
5.4.2.2 LBA status descriptor ... 126
5.4.2.3 LBA status descriptor relationships ... 126
5.5 ORWRITE (16) command ... 127
5.6 ORWRITE (32) command ... 133
5.7 POPULATE TOKEN command ... 135
5.7.1 POPULATE TOKEN command overview ... 135
5.7.2 POPULATE TOKEN parameter list ... 136
5.7.3 Block device range descriptor ... 138
5.8 PRE-FETCH (10) command ... 139
5.9 PRE-FETCH (16) command ... 140
5.10 PREVENT ALLOW MEDIUM REMOVAL command ... 141
5.11 READ (10) command ... 142
5.12 READ (12) command ... 146
5.13 READ (16) command ... 148
5.14 READ (32) command ... 149
5.15 READ CAPACITY (10) command ... 150
5.15.1 READ CAPACITY (10) overview ... 150
5.15.2 READ CAPACITY (10) parameter data ... 151
5.16 READ CAPACITY (16) command ... 151
5.16.1 READ CAPACITY (16) command overview ... 151
5.16.2 READ CAPACITY (16) parameter data ... 152
5.17 READ DEFECT DATA (10) command ... 154
5.17.1 READ DEFECT DATA (10) command overview ... 154
5.17.2 READ DEFECT DATA (10) parameter data ... 156
5.18 READ DEFECT DATA (12) command ... 156
5.18.1 READ DEFECT DATA (12) command overview ... 156
5.18.2 READ DEFECT DATA (12) parameter data ... 158
5.19 READ LONG (10) command ... 159
5.20 READ LONG (16) command ... 161
5.21 REASSIGN BLOCKS command ... 161
5.21.1 REASSIGN BLOCKS command overview ... 161
5.21.2 REASSIGN BLOCKS parameter list ... 163
5.22 RECEIVE ROD TOKEN INFORMATION ... 165
5.22.1 RECEIVE ROD TOKEN INFORMATION overview ... 165
5.22.2 RECEIVE ROD TOKEN INFORMATION parameter data for POPULATE TOKEN command ... 165
5.22.3 The RECEIVE ROD TOKEN INFORMATION parameter data for the WRITE USING TOKEN command ... 168
5.23 REPORT REFERRALS command ... 169
5.23.1 REPORT REFERRALS command overview ... 169
5.23.2 REPORT REFERRALS parameter data ... 170
5.24 SANITIZE command ... 171
5.24.1 SANITIZE command overview ... 171
5.24.2 SANITIZE command service actions ... 172
5.24.2.1 SANITIZE command service actions overview ... 172
5.24.2.2 OVERWRITE service action ... 172
5.24.2.3 BLOCK ERASE service action ... 173
5.24.2.4 CRYPTOGRAPHIC ERASE service action ... 174
5.24.2.5 EXIT FAILURE MODE service action ... 174
5.25 START STOP UNIT command ... 174
5.26 SYNCHRONIZE CACHE (10) command ... 178
5.27 SYNCHRONIZE CACHE (16) command ... 179
5.28 UNMAP command ... 180
5.28.1 UNMAP command overview ... 180
5.28.2 UNMAP parameter list ... 181
5.29 VERIFY (10) command ... 182

Documents
Document Sharing Hub
Full document details: BS ISO/IEC 14776-323:2017

5.30 VERIFY (12) command ... 195
5.31 VERIFY (16) command ... 196
5.32 VERIFY (32) command ... 197
5.33 WRITE (10) command ... 198
5.34 WRITE (12) command ... 201
5.35 WRITE (16) command ... 202
5.36 WRITE (32) command ... 203
5.37 WRITE AND VERIFY (10) command ... 204
5.38 WRITE AND VERIFY (12) command ... 205
5.39 WRITE AND VERIFY (16) command ... 206
5.40 WRITE AND VERIFY (32) command ... 207
5.41 WRITE LONG (10) command ... 208
5.42 WRITE LONG (16) command ... 211
5.43 WRITE SAME (10) command ... 212
5.44 WRITE SAME (16) command ... 214
5.45 WRITE SAME (32) command ... 215
5.46 WRITE USING TOKEN command ... 217
5.46.1 WRITE USING TOKEN command overview ... 217
5.46.2 WRITE USING TOKEN parameter list ... 218
5.47 XDWRITEREAD (10) command ... 220
5.48 XDWRITEREAD (32) command ... 222
5.49 XPWRITE (10) command ... 222
5.50 XPWRITE (32) command ... 224

6 Parameters for direct access block devices ... 225
6.1 Parameters for direct access block devices introduction ... 225
6.2 Address descriptors ... 225
6.2.1 Address descriptor overview ... 225
6.2.2 Short block format address descriptor ... 226
6.2.3 Extended bytes from index address descriptor ... 226
6.2.4 Extended physical sector format address descriptor ... 228
6.2.5 Long block format address descriptor ... 229
6.2.6 Bytes from index format address descriptor ... 229
6.2.7 Physical sector format address descriptor ... 230
6.3 Diagnostic parameters ... 231
6.3.1 Diagnostic parameters overview ... 231
6.3.2 Rebuild Assist Input diagnostic page ... 232
6.3.3 Rebuild Assist Output diagnostic page ... 233
6.3.4 Translate Address Input diagnostic page ... 234
6.3.5 Translate Address Output diagnostic page ... 236
6.4 Log parameters ... 237
6.4.1 Log parameters overview ... 237
6.4.1.1 Summary of log pages ... 237
6.4.1.2 Setting and resetting log parameters ... 237
6.4.2 Background Scan log page ... 238
6.4.2.1 Background Scan log page overview ... 238
6.4.2.2 Background Scan Status log parameter ... 240
6.4.2.3 Background Scan Results log parameter ... 242
6.4.3 Format Status log page ... 245
6.4.3.1 Format Status log page overview ... 245
6.4.3.2 Format Data Out log parameter ... 246
6.4.3.3 Grown Defects During Certification log parameter ... 247
6.4.3.4 Total Blocks Reassigned During Format log parameter ... 248
6.4.3.5 Total New Blocks Reassigned log parameter ... 249
6.4.3.6 Power On Minutes Since Format log parameter ... 250
6.4.4 Logical Block Provisioning log page ... 251
6.4.4.1 Logical Block Provisioning log page overview ... 251
6.4.4.2 Available LBA Mapping Resource Count log parameter ... 253

Documents
Document Sharing Hub
Full document details: BS ISO/IEC 14776-323:2017

6.4.4.2.1 Available LBA Mapping Resource Count log parameter overview 253
6.4.4.2.2 RESOURCE COUNT field 254
6.4.4.3 Used LBA Mapping Resource Count log parameter 254
6.4.4.4 De-duplicated LBA Resource Count log parameter 255
6.4.4.5 Compressed LBA Resource Count log parameter 256
6.4.4.6 Total Efficiency LBA Resource Count log parameter 257
6.4.5 Non-volatile Cache log page 258
6.4.5.1 Non-volatile Cache log page overview 258
6.4.5.2 Remaining Nonvolatile Time log parameter 259
6.4.5.3 Maximum Nonvolatile Time log parameter 260
6.4.6 Solid State Media log page 260
6.4.6.1 Solid State Media log page overview 260
6.4.6.2 Percentage Used Endurance Indicator log parameter 262
6.5 Mode parameters 263
6.5.1 Mode parameters overview 263
6.5.2 Mode parameter block descriptors 264
6.5.2.1 Mode parameter block descriptors overview 264
6.5.2.2 Short LBA mode parameter block descriptor 264
6.5.2.3 Long LBA mode parameter block descriptor 266
6.5.3 Application Tag mode page 267
6.5.3.1 Introduction 267
6.5.3.2 Application tag descriptor 269
6.5.4 Background Control mode page 270
6.5.5 Caching mode page 272
6.5.6 Informational Exceptions Control mode page 276
6.5.7 Logical Block Provisioning mode page 281
6.5.7.1 Logical Block Provisioning mode page overview 281
6.5.7.2 Threshold descriptor format 282
6.5.8 Read-Write Error Recovery mode page 283
6.5.9 Verify Error Recovery mode page 289
6.6 Vital product data (VPD) parameters 290
6.6.1 VPD parameters overview 290
6.6.2 Block Device Characteristics VPD page 291
6.6.3 Block Limits VPD page 294
6.6.4 Logical Block Provisioning VPD page 297
6.6.5 Referrals VPD page 299
6.6.6 Third-Party Copy VPD page 300
6.6.6.1 Third-Party Copy VPD page overview 300
6.6.6.2 Block device third-party copy descriptor type codes 300
6.6.6.3 Block Device ROD Token Limits descriptor 301
6.7 Copy manager parameters 302

Annex A (informative) Numeric order codes 303
A.1 Variable length CDBs 303
A.2 Service action CDBs 304

Annex B (informative) XOR command examples 305
B.1 XOR command examples overview 305
B.2 Update write operation 305
B.3 Regenerate operation 306
B.4 Rebuild operation 307

Annex C (informative) CRC example in C 309

Annex D (informative) Sense information for locked or encrypted logical units 311

Annex E (informative) Optimizing block access characteristics 312
E.1 Optimizing block access overview 312

Documents
Document Sharing Hub
Full document details: BS ISO/IEC 14776-323:2017

E.2 Starting logical block offset ... 312
E.3 Optimal granularity sizes ... 312
E.4 Optimizing transfers ... 312
E.5 Examples ... 313

Annex F (informative) Logical block provisioning reporting examples ... 314
F.1 Logical block provisioning reporting examples overview ... 314
F.2 Interpreting log parameter counts ... 314
F.3 Dedicated resource, threshold set tracked example ... 315
F.3.1 Dedicated resource, threshold set tracked example overview ... 315
F.3.2 Dedicated resource, threshold set tracked example configuration ... 315
F.3.3 Dedicated resource, threshold set tracked example sequence ... 316
F.3.4 Dedicated resource, threshold set tracked example initial conditions ... 317
F.3.5 Operations that occur ... 317
F.3.6 Dedicated resource, threshold set tracked example final log page values ... 318
F.4 Shared resource, logical block tracked example ... 318
F.4.1 Shared resource, logical block tracked example overview ... 318
F.4.2 Shared resource, logical block tracked example configuration ... 319
F.4.3 Shared resource, logical block tracked example time line ... 319
F.4.4 Shared resource, logical block tracked example initial conditions ... 320
F.4.5 Operations that occur ... 320
F.4.6 Shared resource, logical block tracked example final log page values ... 321
F.5 Shared available, dedicated used, logical block tracked example ... 322
F.5.1 Shared available, dedicated used, logical block tracked example overview ... 322
F.5.2 Shared available, dedicated used, logical block tracked example configuration ... 322
F.5.3 Shared available, dedicated used, logical block tracked example time line ... 322
F.5.4 Shared available, dedicated used, logical block tracked example initial conditions ... 323
F.5.5 Operations that occur ... 323
F.5.6 Shared available, dedicated used, example final log page values ... 324

Annex G (informative) Discovering referrals examples ... 325
G.1 Referrals example with no user data segment multiplier ... 325
G.2 Referrals example with non-zero user data segment multiplier ... 327

Bibliography ... 329

Documents
Document Sharing Hub

Full document details: BS ISO/IEC 14776-323:2017

Figure 0 – SCSI document relationships 7
Figure 1 – Example state machine figure 24
Figure 2 – One or more physical blocks per logical block examples 30
Figure 3 – One or more logical blocks per physical block examples 31
Figure 4 – Two logical blocks per physical block alignment examples 31
Figure 5 – Four logical blocks per physical block alignment examples 32
Figure 6 – Examples of the relationship between mapped and unmapped LBAs and physical blocks 33
Figure 7 – Armed decreasing threshold operation 39
Figure 8 – Armed increasing threshold operation 39
Figure 9 – LBP state machine (anchored LBAs supported and deallocated LBAs supported) 41
Figure 10 – LBP state machine (anchored LBAs not supported) 42
Figure 11 – LBP state machine (deallocated LBAs not supported) 42
Figure 12 – SSU_PC state machine 73
Figure 13 – Referrals 98
Figure B.1 – Update write operation (SCSI storage array device supervised) 306
Figure B.2 – Regenerate operation (SCSI storage array device supervised) 307
Figure B.3 – Rebuild operation (SCSI storage array device supervised) 308
Figure G.1 – Referrals example with no user data segment multiplier 325
Figure G.2 – Referrals example with non-zero user data segment multiplier 327

Documents
Document Sharing Hub
Full document details: BS ISO/IEC 14776-323:2017

Table 1 – Numbering convention examples ... 22
Table 2 – Comparison of decimal prefixes and binary prefixes ... 23
Table 3 – Direct access block device type model topics ... 25
Table 4 – Logical block provisioning states supported by logical block provisioning type ... 33
Table 5 – WRITE SAME command and unmap operations ... 36
Table 6 – Threshold resource value, threshold type value, and threshold arming value for logical block provisioning thresholds ... 38
Table 7 – Logical block data returned by a read operation from a mapped LBA ... 43
Table 8 – Logical block data returned by a read operation from an unmapped LBA ... 43
Table 9 – Defect lists (i.e., PLIST and GLIST) ... 50
Table 10 – Address descriptor formats ... 52
Table 11 – SBC-3 commands that are allowed in the presence of various reservations ... 57
Table 12 – Example error conditions ... 59
Table 13 – Sense data field usage for direct access block devices ... 60
Table 14 – Block commands sense data descriptor format ... 62
Table 15 – User data segment referral sense data descriptor format ... 62
Table 16 – User data segment referral descriptor format ... 63
Table 17 – Target port group descriptor ... 64
Table 18 – Direct-access block device sense data descriptor format ... 65
Table 19 – Summary of states in the SSU_PC state machine ... 72
Table 20 – Logical block data format with a single protection information interval ... 85
Table 21 – An example of the logical block data for a logical block with more than one protection information interval ... 86
Table 22 – Content of the first LOGICAL BLOCK REFERENCE TAG field for the first logical block in the Data-In Buffer and/or Data-Out Buffer ... 87
Table 23 – Content of subsequent LOGICAL BLOCK REFERENCE TAG fields for a logical block in the Data-In Buffer and/or Data-Out Buffer ... 88
Table 24 – CRC polynomials ... 89
Table 25 – CRC test cases ... 90
Table 26 – Associations between commands and CbCS permissions ... 96
Table 27 – Commands that require uninterrupted sequences ... 97
Table 28 – Performing an ORWRITE set operation ... 103
Table 29 – ROD token type values ... 106
Table 30 – Block device zero ROD token format ... 106
Table 31 – Commands for direct access block devices ... 108
Table 32 – COMPARE AND WRITE command ... 112
Table 33 – FORMAT UNIT command ... 114
Table 34 – FORMAT UNIT command address descriptor support requirements ... 116
Table 35 – FORMAT UNIT parameter list ... 117
Table 36 – Short parameter list header ... 117
Table 37 – Long parameter list header ... 118
Table 38 – FMTPINFO field and PROTECTION FIELD USAGE field ... 119
Table 39 – Initialization pattern descriptor ... 122
Table 40 – INITIALIZATION PATTERN TYPE field ... 123
Table 41 – GET LBA STATUS command ... 124
Table 42 – GET LBA STATUS parameter data ... 125
Table 43 – LBA status descriptor format ... 126
Table 44 – PROVISIONING STATUS field ... 126
Table 45 – ORWRITE (16) command ... 127
Table 46 – ORPROTECT field - checking protection information from the read operations ... 128
Table 47 – ORPROTECT field - checking protection information from the Data-Out Buffer ... 131
Table 48 – ORWRITE (32) command ... 133
Table 49 – BMOP field ... 134
Table 50 – POPULATE TOKEN command ... 135
Table 51 – POPULATE TOKEN parameter list ... 136
Table 52 – Block device range descriptor ... 138
Table 53 – PRE-FETCH (10) command ... 139
Table 54 – PRE-FETCH (16) command ... 140

Documents
Document Sharing Hub
Full document details: BS ISO/IEC 14776-323:2017

Table 55 – PREVENT ALLOW MEDIUM REMOVAL command 141
Table 56 – PREVENT field 141
Table 57 – READ (10) command 142
Table 58 – RDPROTECT field 143
Table 59 – READ (12) command 147
Table 60 – READ (16) command 148
Table 61 – READ (32) command 149
Table 62 – READ CAPACITY (10) command 150
Table 63 – READ CAPACITY (10) parameter data 151
Table 64 – READ CAPACITY (16) command 152
Table 65 – READ CAPACITY (16) parameter data 152
Table 66 – P_TYPE field and PROT_EN bit 153
Table 67 – LOGICAL BLOCKS PER PHYSICAL BLOCK EXPONENT field 153
Table 68 – READ DEFECT DATA (10) command 154
Table 69 – REQ_PLIST bit and REQ_GLIST bit 155
Table 70 – READ DEFECT DATA (10) parameter data 156
Table 71 – READ DEFECT DATA (12) command 157
Table 72 – READ DEFECT DATA (12) parameter data 158
Table 73 – READ LONG (10) command 159
Table 74 – READ LONG (16) command 161
Table 75 – REASSIGN BLOCKS command 162
Table 76 – REASSIGN BLOCKS parameter list 163
Table 77 – REASSIGN BLOCKS short parameter list header 163
Table 78 – REASSIGN BLOCKS long parameter list header 163
Table 79 – Reassign LBA if the LONGLBA bit is set to zero 164
Table 80 – Reassign LBA if the LONGLBA bit is set to one 164
Table 81 – RECEIVE ROD TOKEN INFORMATION reference 165
Table 82 – RECEIVE ROD TOKEN INFORMATION parameter data for POPULATE TOKEN 166
Table 83 – RECEIVE ROD TOKEN INFORMATION parameter data for WRITE USING TOKEN 168
Table 84 – REPORT REFERRALS command 169
Table 85 – REPORT REFERRALS parameter data 170
Table 86 – SANITIZE command 171
Table 87 – SANITIZE service action codes 172
Table 88 – OVERWRITE service action parameter list 172
Table 89 – TEST field 173
Table 90 – START STOP UNIT command 175
Table 91 – POWER CONDITION and POWER CONDITION MODIFIER field 176
Table 92 – SYNCHRONIZE CACHE (10) command 178
Table 93 – SYNCHRONIZE CACHE (16) command 179
Table 94 – UNMAP command 180
Table 95 – UNMAP parameter list 181
Table 96 – UNMAP block descriptor 182
Table 97 – Data-Out Buffer contents for the VERIFY (10) command 183
Table 98 – VERIFY (10) command 183
Table 99 – VRPROTECT field with the BYTCHK field set to 00b – checking protection information from the verify operations 185
Table 100 – VRPROTECT field with the BYTCHK field set to 01b or 11b – checking protection information from the verify operations 188
Table 101 – VRPROTECT field with the BYTCHK field set to 01b or 11b – checking protection information from the Data-Out Buffer 190
Table 102 – VRPROTECT field with the BYTCHK field set to 01b or 11b – compare operation requirements 192
Table 103 – VERIFY (12) command 195
Table 104 – VERIFY (16) command 196
Table 105 – VERIFY (32) command 197
Table 106 – WRITE (10) command 198
Table 107 – WRPROTECT field 199
Table 108 – WRITE (12) command 201
Table 109 – WRITE (16) command 202

Documents
Document Sharing Hub
Full document details: BS ISO/IEC 14776-323:2017

Table 110 – WRITE (32) command ... 203
Table 111 – WRITE AND VERIFY (10) command ... 204
Table 112 – WRITE AND VERIFY (12) command ... 205
Table 113 – WRITE AND VERIFY (16) command ... 206
Table 114 – WRITE AND VERIFY (32) command ... 207
Table 115 – WRITE LONG (10) command ... 208
Table 116 – COR_DIS bit, WR_UNCOR bit, and PBLOCK bit ... 209
Table 117 – WRITE LONG (16) command ... 211
Table 118 – WRITE SAME (10) command ... 213
Table 119 – UNMAP bit, ANCHOR bit, and ANC_SUP bit relationships ... 214
Table 120 – WRITE SAME (16) command ... 215
Table 121 – NDOB bit and UNMAP bit interactions ... 215
Table 122 – WRITE SAME (32) command ... 216
Table 123 – WRITE USING TOKEN command ... 217
Table 124 – WRITE USING TOKEN parameter list ... 218
Table 125 – XDWRITEREAD (10) command ... 221
Table 126 – XDWRITEREAD (32) command ... 222
Table 127 – XPWRITE (10) command ... 223
Table 128 – XPWRITE (32) command ... 224
Table 129 – Parameters for direct access block devices ... 225
Table 130 – Address descriptors ... 226
Table 131 – Short block format address descriptor (000b) ... 226
Table 132 – Extended bytes from index format address descriptor (001b) ... 227
Table 133 – Sorting order for extended bytes from index format address descriptors ... 227
Table 134 – Extended physical sector format address descriptor (010b) ... 228
Table 135 – Sorting order for extended physical sector format address descriptors ... 229
Table 136 – Long block format address descriptor (011b) ... 229
Table 137 – Bytes from index format address descriptor (100b) ... 229
Table 138 – Sorting order for bytes from index format address descriptors ... 230
Table 139 – Physical sector format address descriptor (101b) ... 230
Table 140 – Sorting order for physical sector format address descriptors ... 230
Table 141 – Diagnostic page codes for direct access block devices ... 231
Table 142 – Rebuild Assist Input diagnostic page ... 232
Table 143 – Rebuild Assist Output diagnostic page ... 233
Table 144 – Translate Address Input diagnostic page ... 234
Table 145 – Translate Address Output diagnostic page ... 236
Table 146 – Log page codes and subpage codes for direct access block devices ... 237
Table 147 – Keywords for resetting or changing log parameters ... 238
Table 148 – Background Scan log page parameter codes ... 238
Table 149 – Background Scan log page ... 239
Table 150 – Background Scan Status log parameter format ... 240
Table 151 – BACKGROUND SCAN STATUS field ... 241
Table 152 – Background Scan Results log parameter format ... 242
Table 153 – REASSIGN STATUS field ... 243
Table 154 – Format Status log page parameter codes ... 245
Table 155 – Format Status log page ... 245
Table 156 – Format Data Out log parameter format ... 246
Table 157 – Grown Defects During Certification log parameter format ... 247
Table 158 – Total Blocks Reassigned During Format log parameter format ... 248
Table 159 – Total New Blocks Reassigned log parameter format ... 249
Table 160 – Power On Minutes Since Format log parameter format ... 250
Table 161 – Logical Block Provisioning log parameters ... 251
Table 162 – Logical Block Provisioning log page ... 252
Table 163 – Available LBA Mapping Resource Count log parameter format ... 253
Table 164 – SCOPE field ... 253
Table 165 – Used LBA Mapping Resource Count log parameter format ... 254
Table 166 – De-duplicated LBA Resource Count log parameter format ... 255
Table 167 – Compressed LBA Resource Count log parameter format ... 256

Documents
Document Sharing Hub
Full document details: BS ISO/IEC 14776-323:2017

Table 168 – Total Efficiency LBA Resource Count log parameter format 257
Table 169 – Nonvolatile Cache log parameters 258
Table 170 – Nonvolatile Cache log page 258
Table 171 – Remaining Nonvolatile Time parameter data 259
Table 172 – REMAINING NONVOLATILE TIME field 259
Table 173 – Maximum Nonvolatile Time parameter data 260
Table 174 – MAXIMUM NONVOLATILE TIME field 260
Table 175 – Solid State Media log parameters 261
Table 176 – Solid State Media log page 261
Table 177 – Percentage Used Endurance Indicator log parameter format 262
Table 178 – Mode page codes and subpage codes for direct access block devices 263
Table 179 – DEVICE-SPECIFIC PARAMETER field for direct access block devices 264
Table 180 – Short LBA mode parameter block descriptor 265
Table 181 – Long LBA mode parameter block descriptor 266
Table 182 – Application Tag mode page 268
Table 183 – Application tag descriptor format 269
Table 184 – Background Control mode page 270
Table 185 – Caching mode page 272
Table 186 – DEMAND READ RETENTION PRIORITY field 273
Table 187 – WRITE RETENTION PRIORITY field 274
Table 188 – SYNC_PROG field 275
Table 189 – Informational Exceptions Control mode page 276
Table 190 – Definitions for the combinations of values in EWASC, DEXCPT, and TEST 277
Table 191 – Method of reporting informational exceptions (MRIE) field 278
Table 192 – Use of the INTERVAL TIMER field and the REPORT COUNT field based on the MRIE field 280
Table 193 – Logical Block Provisioning mode page 281
Table 194 – Threshold descriptor format 282
Table 195 – THRESHOLD TYPE field 282
Table 196 – THRESHOLD ARMING field 282
Table 197 – Read-Write Error Recovery mode page 283
Table 198 – Error recovery bit combinations 285
Table 199 – Verify Error Recovery mode page 289
Table 200 – VPD page codes for direct access block devices 290
Table 201 – Block Device Characteristics VPD page 291
Table 202 – MEDIUM ROTATION RATE field 291
Table 203 – PRODUCT TYPE field 292
Table 204 – WABEREQ field 292
Table 205 – WACEREQ field 293
Table 206 – NOMINAL FORM FACTOR field 293
Table 207 – Block Limits VPD page 294
Table 208 – Transfer limits for commands 295
Table 209 – Logical Block Provisioning VPD page 297
Table 210 – PROVISIONING TYPE field 298
Table 211 – Referrals VPD page 299
Table 212 – Block device third-party copy descriptor type codes 300
Table 213 – Block Device ROD Token Limits descriptor 301
Table 214 – ROD token device type specific data 302
Table A.1 – Variable length command service action code assignments 303
Table A.2 – SERVICE ACTION IN (16) service actions 304
Table A.3 – SERVICE ACTION OUT (16) service actions 304
Table D.1 – Sense information for locked or encrypted logical units 311
Table F.1 – Dedicated resource, threshold set tracked example capacity information 315
Table F.2 – Dedicated resource, threshold set tracked example capacity information 316
Table F.3 – Dedicated resource, threshold set tracked example initial conditions 317
Table F.4 – Dedicated resource, threshold set tracked example final log page values 318
Table F.5 – Shared resource, logical block tracked example capacity information 319
Table F.6 – Shared resource, logical block tracked example initial conditions 320
Table F.7 – Shared resource, logical block tracked example final log page values 321

Documents
Document Sharing Hub

Full document details: BS ISO/IEC 14776-323:2017

Table F.8 – Shared available, dedicated used example capacity information 322
Table F.9 – Shared resource, logical block tracked example initial conditions 323
Table F.10 – Shared available, dedicated used example final log page values 324
Table G.1 – Referrals application client information with no user data segment multiplier 326
Table G.2 – User data segment calculations with no user data segment multiplier 326
Table G.3 – Referrals application client information with non-zero user data segment multiplier 328
Table G.4 – User data segment calculations with non-zero user data segment multiplier 328

Documents
Document Sharing Hub
Full document details: BS ISO/IEC 14776-323:2017

INFORMATION TECHNOLOGY – SMALL COMPUTER SYSTEM INTERFACE (SCSI) -

Part 323: SCSI Block Commands – 3 (SBC-3)

FOREWORD

1) ISO (the International Organization for Standardization) and IEC (the International Electrotechnical Commission) form the specialized system for worldwide standardization. National bodies that are members of ISO or IEC participate in the development of International Standards through technical committees established by the respective organization to deal with particular fields of technical activity. ISO and IEC technical committees collaborate in fields of mutual interest. Other international organizations, governmental and non-governmental, in liaison with ISO and IEC, also take part in the work. In the field of information technology, ISO and IEC have established a joint technical committee, ISO/IEC JTC 1.
2) The formal decisions or agreements of IEC and ISO on technical matters express, as nearly as possible, an international consensus of opinion on the relevant subjects since each technical committee has representation from all interested IEC National Committees and ISO member bodies.
3) IEC, ISO and ISO/IEC publications have the form of recommendations for international use and are accepted by IEC National Committees and ISO member bodies in that sense. While all reasonable efforts are made to ensure that the technical content of IEC, ISO and ISO/IEC publications is accurate, IEC or ISO cannot be held responsible for the way in which they are used or for any misinterpretation by any end user.
4) In order to promote international uniformity, IEC National Committees and ISO member bodies undertake to apply IEC, ISO and ISO/IEC publications transparently to the maximum extent possible in their national and regional publications. Any divergence between any ISO, IEC or ISO/IEC publication and the corresponding national or regional publication should be clearly indicated in the latter.
5) ISO and IEC do not provide any attestation of conformity. Independent certification bodies provide conformity assessment services and, in some areas, access to IEC marks of conformity. ISO or IEC are not responsible for any services carried out by independent certification bodies.
6) All users should ensure that they have the latest edition of this publication.
7) No liability shall attach to IEC or ISO or its directors, employees, servants or agents including individual experts and members of their technical committees and IEC National Committees or ISO member bodies for any personal injury, property damage or other damage of any nature whatsoever, whether direct or indirect, or for costs (including legal fees) and expenses arising out of the publication of, use of, or reliance upon, this ISO/IEC publication or any other IEC, ISO or ISO/IEC publications.
8) Attention is drawn to the normative references cited in this publication. Use of the referenced publications is indispensable for the correct application of this publication.
9) Attention is drawn to the possibility that some of the elements of this ISO/IEC publication may be the subject of patent rights. ISO and IEC shall not be held responsible for identifying any or all such patent rights.

International Standard ISO/IEC 14776-323 was prepared by subcommittee 25: Interconnection of information technology equipment, of ISO/IEC joint technical committee 1: Information technology.

The list of all currently available parts of the ISO/IEC 14776 series, under the general title *Information technology – Small computer system interface (SCSI)*, can be found on the IEC web site.

This International Standard has been approved by vote of the member bodies and the voting results may be obtained from the address given on the second title page.

Documents
Document Sharing Hub

Full document details: BS ISO/IEC 14776-323:2017

This publication has been drafted in accordance with the ISO/IEC Directives, Part 2, except as described in 3.5 and 3.6.

IMPORTANT - The 'colour inside' logo on the cover page of this publication indicates that it contains colours which are considered to be useful for the correct understanding of its contents. Users should therefore print this document using a colour printer.

Documents
Document Sharing Hub

Full document details: BS ISO/IEC 14776-323:2017

INTRODUCTION

General

The purpose of this standard is to define the model and command set extensions to be used in conjunction with the SCSI Primary Command Set standard - 4 (SPC-4) to facilitate operation of SCSI direct-access block devices (e.g., hard disk drives).

SCSI standards family

Figure 0 shows the relationship of this standard to the other standards and related projects in the SCSI family of standards as of the publication of this standard.

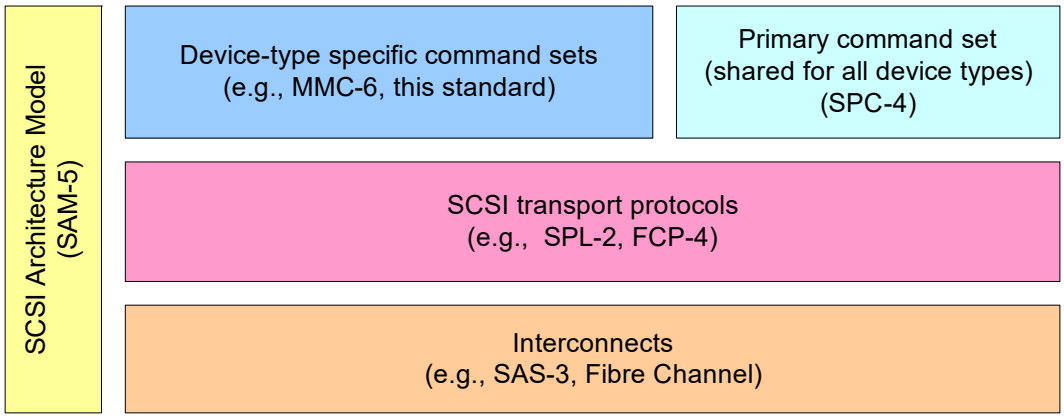

Figure 0 – SCSI document relationships

Figure 0 gives the general relationship of the documents to one another and is not intended to imply a relationship such as a hierarchy, protocol stack, or system architecture.

The set of SCSI standards specifies the interfaces, functions, and operations necessary to ensure interoperability between conforming SCSI implementations. This standard is a functional description. Conforming implementations may employ any design technique that does not violate interoperability. See SAM-5 for more information about the relationships between the SCSI standards.

This standard makes obsolete the following concepts from SBC-2:

a) linked commands;
b) the partial medium indicator (PMI) bit and the LOGICAL BLOCK ADDRESS field in the READ CAPACITY (10) command and the READ CAPACITY (16) command;
c) the READ (6) command and the WRITE (6) command;
d) the XDREAD (10) command, the XDREAD (32) command, the XDWRITE (10) command, and the XDWRITE (32) command;
e) the SYNC_NV bit in the SYNCHRONIZE CACHE commands;
f) the FUA_NV bit in read commands;
g) the FUA_NV bit in write commands;
h) the LBDATA bit and the PBDATA bit in the WRITE SAME commands;
i) the initialization pattern modifier (IP MODIFIER) field in the initialization pattern descriptor in the FORMAT UNIT command; and
j) the XOR Control mode page.

Documents
Document Sharing Hub
Full document details: BS ISO/IEC 14776-323:2017

INFORMATION TECHNOLOGY – SMALL COMPUTER SYSTEM INTERFACE (SCSI) –

Part 323: SCSI Block Commands - 3 (SBC-3)

1 Scope

This part of ISO/IEC 14776 defines the command set extensions to facilitate operation of SCSI direct access block devices. The clauses in this standard, implemented in conjunction with the applicable clauses of SPC-4, specify the standard command set for SCSI direct access block devices.

The objectives of this standard are to:

a) permit an application client to communicate over a SCSI service delivery subsystem (see SAM-5) with a logical unit that declares itself to be a direct access block device in the PERIPHERAL DEVICE TYPE field of the standard INQUIRY data (see SPC-4); and
b) define commands and parameters unique to the direct access block device type.

2 Normative references

The following documents are referred to in the text in such a way that some or all of their content constitutes requirements of this document. For dated references, only the edition cited applies. For undated references, the latest edition of the referenced document (including any amendments) applies.

ISO/IEC 14776-262, *Information Technology - Small Computer System Interface (SCSI) - Part 262: SAS Protocol Layer - 2 (SPL-2)*

ISO/IEC 14776-342, *Information Technology - Small Computer System Interface (SCSI) - Part 342: Controller Commands - 2 (SCC-2)*

INCITS 513-2015, *Information Technology - SCSI Primary Commands - 4 (SPC-4)*

INCITS 515-2016, *Information Technology - SCSI Architecture Model - 5 (SAM-5)*

INCITS 517-2015, *Information Technology - SCSI / ATA Translation - 3 (SAT-3)*

INCITS 448-2008, *Information Technology - SCSI Enclosure Services - 2 (SES-2)*

Documents
Document Sharing Hub
Full document details: BS ISO/IEC 14776-323:2017

3 Terms, definitions, symbols, abbreviations, keywords, and conventions

3.1 Terms and definitions

For the purposes of this document the following terms and definitions apply.

ISO and IEC maintain terminological databases for use in standardization at the following addresses:

- IEC Electropedia: available at http://www.electropedia.org/
- ISO Online browsing platform: available at http://www.iso.org/obp

3.1.1
additional sense code
combination of the ADDITIONAL SENSE CODE field and the ADDITIONAL SENSE CODE QUALIFIER field in sense data

Note 1 to entry: See SPC-4.

3.1.2
AND
Boolean arithmetic function (see 3.1.10) on two binary input values that results in an output value of one if both of the input values are one or zero if either of the input values is zero

3.1.3
AND operation
performance of an AND (see 3.1.2) bitwise on two multiple-bit input values both having the same number of bits

Note 1 to entry: An example of multiple-bit inputs is the current content of a logical block and the content contained in the Data-Out Buffer having the same number of bytes.

3.1.4
anchored
logical block provisioning state of an LBA (see 4.7.1) in which physical capacity has been reserved for the referenced logical block (see 4.7.4.8)

3.1.5
application client
object that is the source of SCSI commands

Note 1 to entry: See SAM-5.

3.1.6
automatic read reassignment
sequence after the device server detects a recovered read error during which the device server, without intervention from an application client, performs a reassign operation on the LBA for which the error was detected

3.1.7
automatic write reassignment
sequence after the device server detects a recovered error or an unrecovered error during which the device server, without intervention from an application client, performs a reassign operation on the LBA for which the error was detected

3.1.8
background function
either a background scan operation (see 4.24) or a device specific background function (see 3.1.23)

3.1.9
bitmap buffer
temporary buffer within a device server (e.g., for one or more bytes of the result of an AND operation (see 3.1.3) or an OR operation (see 3.1.51))

Documents
Document Sharing Hub
Full document details: BS ISO/IEC 14776-323:2017

3.1.10
Boolean arithmetic function
function that produces an output from one or more inputs according to the rules of AND (see 3.1.2), XOR (see 3.1.27), and OR (see 3.1.50)

3.1.11
byte
sequence of eight contiguous bits considered as a unit

3.1.12
cache
temporary data storage area that is capable of containing a subset of the logical block data stored by the logical unit and is either volatile or non-volatile

3.1.13
check data
information contained within a redundancy group (see 3.1.73) that may allow lost or destroyed XOR-protected data (see 3.1.105) to be recreated

3.1.14
command
request describing a unit of work to be performed by a device server

Note 1 to entry: See SAM-5.

3.1.15
command descriptor block
CDB
structure used to communicate commands from an application client to a device server

Note 1 to entry: See SPC-4.

3.1.16
compare operation
process by which a device server compares two sets of data for equality

3.1.17
cyclic redundancy check
CRC
error checking mechanism that checks data integrity by computing a polynomial algorithm based checksum (see 4.22.4)

3.1.18
Data-In Buffer
buffer specified by the application client to receive data from the device server during the processing of a command

Note 1 to entry: See SAM-5 and SPC-4.

3.1.19
Data-Out Buffer
buffer specified by the application client to supply data that is sent from the application client to the device server during the processing of a command

Note 1 to entry: See SAM-5 and SPC-4.

3.1.20
deallocated
logical block provisioning state of an LBA (see 4.7.1) in which physical capacity has not been reserved for the referenced logical block (see 4.7.4.7)

Documents
Document Sharing Hub
Full document details: BS ISO/IEC 14776-323:2017

3.1.21
defect list
GLIST (see 4.13) or PLIST (see 4.13)

3.1.22
device server
object within a logical unit (see 3.1.43) that processes SCSI commands according to the rules of command management

Note 1 to entry: See SAM-5.

3.1.23
device specific background functions
SCSI target device specific functions that a SCSI target device may perform that have no specific association with application client-initiated operations

Note 1 to entry: See SPC-4.

3.1.24
device type
type of peripheral device (i.e., device model) implemented by the device server and indicated to the application client by the PERIPHERAL DEVICE TYPE field of the standard INQUIRY data (see SPC-4)

3.1.25
direct access block device
device that is capable of containing data stored in logical blocks that each have a unique LBA (see 4.2)

3.1.26
error correcting code
ECC
error checking mechanism that checks data integrity and enables some errors in the logical block data to be corrected

3.1.27
exclusive-or
XOR
Boolean arithmetic function on two binary input values that results in an output value of one if one and only one of the input values is one, or zero if both of the input values are either zero or one

3.1.28
extent
set of logical blocks occupying contiguous LBAs on a logical unit

3.1.29
field
group of one or more contiguous bits, a part of a larger structure (e.g., a CDB (see 3.1.15) or sense data (see SPC-4))

3.1.30
format corrupt
vendor specific condition in which the device server may not be able to perform logical block access commands (see 4.10)

3.1.31
format operation
process by which a device server initializes the medium in a logical unit

Note 1 to entry: See 4.10.

Documents
Document Sharing Hub
Full document details: BS ISO/IEC 14776-323:2017

3.1.32
fully provisioned logical unit
logical unit that stores logical block data for every LBA and has assigned physical capacity for every LBA

Note 1 to entry: See 4.7.2.

3.1.33
grown defect list
GLIST
list of physical blocks that the device server has detected as containing medium defects or that the application client has specified as containing medium defects

Note 1 to entry: See 4.13.

3.1.34
hard reset
condition resulting from the events defined by SAM-5 during which the SCSI device performs the hard reset operations described in SAM-5, this standard, and other applicable command standards (see table 31)

3.1.35
I_T nexus
relationship between a SCSI initiator port and a SCSI target port

Note 1 to entry: See SAM-5.

3.1.36
I_T nexus loss
condition resulting from the events defined by SAM-5 during which the SCSI device performs the I_T nexus loss operations described in SAM-5, this standard, and other applicable command standards (see table 31)

3.1.37
LBA mapping resource
resource used by a logical unit that supports logical block provisioning management

Note 1 to entry: An example of a mapping resource is a physical block or a data structure associated with tracking resource usage.

3.1.38
logical block
set of data bytes accessed and referenced as a unit (see 4.5)

3.1.39
logical block access command
command that requests access to one or more logical blocks that may require access to the medium

Note 1 to entry: See 4.2.2.

3.1.40
logical block address
LBA
value used to reference a logical block (see 4.5)

3.1.41
logical block data
user data and protection information, if any

3.1.42
logical block length
number of bytes of user data in a logical block (see 4.5)

Documents
Document Sharing Hub
Full document details: BS ISO/IEC 14776-323:2017

3.1.43
logical unit
externally addressable entity within a SCSI target device (see 3.1.76) that implements a SCSI device model

Note 1 to entry: See SAM-5.

3.1.44
logical unit reset
condition resulting from the events defined by SAM-5 in which the logical unit performs the logical unit reset operations described in SAM-5, this standard, and other applicable command standards (see table 31)

3.1.45
mapped
logical block provisioning state of an LBA (see 4.7.1) in which physical capacity has been assigned to the referenced logical block (see 4.7.4.6)

3.1.46
medium
material that is not cache on which data is stored

Note 1 to entry: The plural of medium is media.

Note 2 to entry: An example of a medium in which data is stored is a magnetic disk.

3.1.47
medium defect
area of the medium that results in a recovered error or an unrecovered error when a read medium operation or a write medium operation is performed

Note 1 to entry: See 4.13.

3.1.48
non-volatile cache
cache that retains logical block data through any power cycle

3.1.49
non-volatile medium
medium that retains logical block data through any power cycle

3.1.50
OR
Boolean arithmetic function (see 3.1.10) on two binary input values that results in an output value of one if either of the input values are one or zero if both of the input values are zero

3.1.51
OR operation
performance of an OR (see 3.1.50) bitwise on two multiple-bit input values both having the same number of bits

Note 1 to entry: An example of multiple-bit inputs is the current content of a logical block and the content contained in the Data-Out Buffer having the same number of bytes.

3.1.52
point in time ROD token
ROD token with a ROD type that is a point in time copy ROD

Note 1 to entry: See SPC-4.

3.1.53
physical block
set of data bytes accessed as a unit by the device server (see 4.6)

Documents
Document Sharing Hub
Full document details: BS ISO/IEC 14776-323:2017

3.1.54
physical block length
number of bytes of logical block data in a physical block (see 4.6)

3.1.55
physical element
component that provides non-volatile storage for an associated group of logical blocks (see 4.20)

3.1.56
power cycle
sequence of power being removed followed by power being applied to a SCSI device

3.1.57
power on
condition resulting from the events defined by SAM-5 during which a SCSI device performs the power on operations described in SAM-5, this standard, and other applicable command standards (see table 31)

3.1.58
primary defect list
PLIST
list of physical blocks containing medium defects that are considered permanent

Note 1 to entry: See 4.13.

3.1.59
protection information
group of fields at the end of each logical block or at specified intervals within each logical block that contain a logical block guard, an application tag, and a reference tag

Note 1 to entry: See 4.22.

3.1.60
protection information interval
length of user data that occurs within a logical block before each protection information

3.1.61
pseudo read data
indeterminate logical block data

3.1.62
pseudo unrecovered error
simulated error (e.g., created by a WRITE LONG command (see 5.41 and 5.42)) for which a device server reports that it is unable to read or write a logical block, regardless of whether the data on the medium is valid, recoverable, or unrecoverable

3.1.63
pseudo unrecovered error with correction enabled
pseudo unrecovered error (see 3.1.62) for which a device server performs the maximum error recovery as specified in the Read-Write Error Recovery mode page (see 6.5.8)

Note 1 to entry: See 4.18.2.

3.1.64
pseudo unrecovered error with correction disabled
pseudo unrecovered error (see 3.1.62) for which a device server performs no error recovery

Note 1 to entry: See 4.18.2.

Documents
Document Sharing Hub
Full document details: BS ISO/IEC 14776-323:2017

3.1.65
read cache operation
process by which a device server reads logical blocks for one or more LBAs from cache as described in 4.15

3.1.66
read command
command that requests read operations

Note 1 to entry: See 4.2.2.

3.1.67
read medium operation
process by which a device server reads logical blocks for one or more LBAs from the medium using the parameters specified in the Read-Write Error Recovery mode page (see 6.5.8)

3.1.68
read operation
process by which a device server performs operations as described in this standard

Note 1 to entry: Examples of read operations are read cache operations and read medium operations.

Note 2 to entry: See 4.2.3.

3.1.69
reassign
perform a reassign operation

3.1.70
reassign operation
operation during which the device server changes the assignment of an LBA from a specified physical block to another physical block and adds the specified physical block to the GLIST

3.1.71
recovered error
error for which a device server is able to read or write a logical block within the recovery limits specified in the Read-Write Error Recovery mode page (see 6.5.8) or the Verify Error Recovery mode page (see 6.5.9)

3.1.72
recovered read error
recovered error that occurs during a read medium operation

3.1.73
redundancy group
grouping of XOR-protected data (see 3.1.105) and associated check data (see 3.1.13) into a single type of data redundancy (see SCC-2)

3.1.74
resource provisioned logical unit
logical unit that may or may not store logical block data for every LBA and that provides enough LBA mapping resources (see 3.1.37) to map every LBA

Note 1 to entry: See 4.7.3.2.

3.1.75
sanitize operation
process by which a device server alters information on a logical unit such that recovery of previous logical block data from the cache and the medium is not possible

Note 1 to entry: See 4.11.

Documents
Document Sharing Hub
Full document details: BS ISO/IEC 14776-323:2017

3.1.76
SCSI target device
SCSI device containing logical units and SCSI target ports that receives device service requests and task management requests for processing and sends device service responses and task management responses to SCSI initiator devices

Note 1 to entry: See SAM-5.

3.1.77
sense data
data describing command completed information that a device server delivers to an application client in the same I_T_L_Q nexus transaction as the status or as parameter data in response to a REQUEST SENSE command

Note 1 to entry: See SPC-4.

3.1.78
sense key
contents of the SENSE KEY field in the sense data

Note 1 to entry: See SAM-5.

3.1.79
status
one byte of response information that contains a coded value defined in SAM-5, transferred from a device server to an application client upon completion of each command

Note 1 to entry: See SAM-5.

3.1.80
stopped power condition
power condition in which a device server terminates TEST UNIT READY commands and logical block access commands

Note 1 to entry: See 4.21.4.

3.1.81
synchronize cache operation
process by which a device server synchronizes logical blocks within the volatile cache with the non-volatile cache or the medium

3.1.82
thin provisioned logical unit
logical unit that may or may not store logical block data for every LBA and that may or may not provide enough LBA mapping resources (see 3.1.37) to map every LBA

Note 1 to entry: See 4.7.3.3.

3.1.83
threshold set
set of two or more logical blocks used for tracking logical block provisioning thresholds

Note 1 to entry: See 4.7.3.7.

3.1.84
threshold set size
number of LBAs in a threshold set

Note 1 to entry: See 4.7.3.7.

Documents
Document Sharing Hub
Full document details: BS ISO/IEC 14776-323:2017

3.1.85
token
representation of a collection of data

Note 1 to entry: See SPC-4.

3.1.86
unit attention condition
state that a logical unit (see 3.1.43) maintains while the logical unit has asynchronous status information to report to the SCSI initiator ports associated with one or more I_T nexuses (see 3.1.35)

Note 1 to entry: See SAM-5.

3.1.87
unmap command
command that requests an unmap operation

Note 1 to entry: See 4.2.2.

3.1.88
unmap operation
process by which a device server either deallocates or anchors a single LBA

Note 1 to entry: See 4.2.3 and 4.7.3.4.

3.1.89
unmapped
logical block provisioning state of an LBA (see 4.7.1) in which the LBA is either anchored or deallocated

3.1.90
unrecovered error
error for which a device server is unable to read a logical block or write a logical block within the recovery limits specified in the Read-Write Error Recovery mode page (see 6.5.8) and/or the Verify Error Recovery mode page (see 6.5.9)

3.1.91
unrecovered read error
unrecovered error that occurs during a read medium operation

3.1.92
unrecovered write error
unrecovered error that occurs during a write medium operation

3.1.93
user data
data contained in logical blocks that is accessible by an application client and is neither protection information nor other information that may not be accessible to the application client

3.1.94
user data segment
contiguous sequence of logical blocks

Note 1 to entry: See 4.28.

3.1.95
verify command
command that requests verify operations

Note 1 to entry: See 4.2.2.

Documents
Document Sharing Hub

Full document details: BS ISO/IEC 14776-323:2017

3.1.96
verify medium operation
process by which a device server reads logical blocks for one or more LBAs from the medium using the parameters specified in the Verify Error Recovery mode page (see 6.5.9)

3.1.97
verify operation
process by which the device server performs operations as described in this standard

Note 1 to entry: An example of a verify operation is a verify medium operation.

Note 2 to entry: See 4.2.3.

3.1.98
volatile cache
cache that does not retain logical block data between power cycles

3.1.99
volatile medium
medium that does not retain logical block data between power cycles

Note 1 to entry: An example of volatile medium is a silicon memory device that loses data written to it if device power is lost.

3.1.100
write cache operation
process by which a device server writes logical blocks for one or more LBAs to the cache (see 4.7.1)

3.1.101
write command
command that requests write operations

Note 1 to entry: See 4.2.2.

3.1.102
write medium operation
process by which a device server writes logical blocks for one or more LBAs to the medium using the parameters specified in the Read-Write Error Recovery mode page (see 6.5.8)

3.1.103
write operation
process by which a device server performs operations as described in this standard

Note 1 to entry: Examples of write operations are write cache operations and write medium operations.

Note 2 to entry: See 4.2.3.

3.1.104
XOR operation
processing of an XOR bitwise on two identical-sized multiple-bit input values

Note 1 to entry: An example of multiple-bit inputs is the current content of a logical block and the content contained in the Data-Out Buffer having the same number of bytes.

3.1.105
XOR-protected data
logical blocks (i.e., including logical block data) that are part of a redundancy group

Documents
Document Sharing Hub
Full document details: BS ISO/IEC 14776-323:2017

3.2 Symbols

Symbols used in this standard include:

Symbol	Meaning
+	plus
–	minus
×	multiplied by
÷	divided by
=	equals
≠	not equal to
<	less than
>	greater than

3.3 Abbreviations

Abbreviations used in this standard include:

Abbreviation	Meaning
CbCS	Capability based Command Security
CDB	command descriptor block (see 3.1.15)
CRC	cyclic redundancy check (see 3.1.17)
ECC	error correcting code (see 3.1.26)
FCP-4	Fibre Channel Protocol for SCSI, fourth version (see Bibliography)
GLIST	grown defect list (see 3.1.33)
LBA	logical block address (see 3.1.40)
LBP	logical block provisioning (see 4.7.4)
LSB	least significant bit
LUN	logical unit number
M	implementation is mandatory
MMC-6	SCSI Multimedia Commands - 6 (see Bibliography)
MSB	most significant bit
O	implementation is optional
PLIST	primary defect list (see 3.1.58)
n/a	not applicable
ROD	representation of data (see SPC-4)
SAM-5	SCSI Architecture Model - 5 (see clause 2)
SAS-3	Serial Attached SCSI-3 (see Bibliography)
SCSI	Small Computer System Interface family of standards
SCC-2	SCSI-3 Controller Commands - 2 (see clause 2)
SES-2	SCSI Enclosure Services - 2 (see clause 2)
SPC-4	SCSI Primary Commands - 4 (see clause 2)
SPL-2	SAS Protocol Layer-2 (see clause 2)
VPD	Vital product data (see 6.6)
XOR	exclusive-or (see 3.1.27)

Documents
Document Sharing Hub
Full document details: BS ISO/IEC 14776-323:2017

3.4 Keywords

3.4.1
ignored
keyword used to describe an unused bit, byte, word, field or code value

Note 1 to entry: The contents or value of an ignored bit, byte, word, field or code value shall not be examined by the receiving SCSI device and may be set to any value by the transmitting SCSI device.

3.4.2
invalid
keyword used to describe an illegal or unsupported bit, byte, word, field or code value

Note 1 to entry: Receipt of an invalid bit, byte, word, field or code value shall be reported as an error.

3.4.3
mandatory
keyword indicating an item that is required to be implemented as defined in this standard

3.4.4
may
keyword that indicates flexibility of choice with no implied preference

Note 1 to entry: “May” is equivalent to “may or may not”.

3.4.5
may not
keywords that indicate flexibility of choice with no implied preference

Note 1 to entry: “May not” is equivalent to “may or may not”.

3.4.6
obsolete
keyword indicating that an item was defined in prior SCSI standards but has been removed from this standard

3.4.7
optional
keyword that describes features that are not required to be implemented by this standard; however, if any optional feature defined in this standard is implemented, then it shall be implemented as defined in this standard

3.4.8
prohibited
keyword used to describe a feature, function, or coded value that is defined in a non-SCSI standard (i.e., a standard that is not a member of the SCSI family of standards) to which this standard makes a normative reference where the use of said feature, function, or coded value is not allowed for implementations of this standard

3.4.9
reserved
keyword referring to bits, bytes, words, fields and code values that are set aside for future standardization

Note 1 to entry: A reserved bit, byte, word or field shall be set to zero, or in accordance with a future extension to this standard.

Note 2 to entry: Recipients are not required to check reserved bits, bytes, words or fields for zero values. Receipt of reserved code values in defined fields shall be reported as an error.

Documents
Document Sharing Hub
Full document details: BS ISO/IEC 14776-323:2017

3.4.10
restricted
keyword referring to bits, bytes, words, and fields that are set aside for other identified standardization purposes

Note 1 to entry: A restricted bit, byte, word, or field shall be treated as a reserved bit, byte, word or field in the context where the restricted designation appears.

3.4.11
shall
keyword indicating a mandatory requirement

Note 1 to entry: Designers are required to implement all such mandatory requirements to ensure interoperability with other products that conform to this standard.

3.4.12
should
keyword indicating flexibility of choice with a strongly preferred alternative

Note 1 to entry: “Should” is equivalent to the phrase “it is strongly recommended”.

3.4.13
vendor specific
something (e.g., a bit, field, code value) that is not defined by this standard

Note 1 to entry: Specification of the referenced item is determined by the SCSI device vendor and may be used differently in various implementations.

3.5 Editorial conventions

Certain words and terms used in this standard have a specific meaning beyond the normal English meaning. These words and terms are defined either in this clause or in the text where they first appear.

Normal case is used for words having the normal English meaning.

Upper case is used when referring to names of commands, status codes, sense keys, and additional sense codes (e.g., REQUEST SENSE command).

If there is more than one CDB length for a particular command (e.g., ORWRITE (16) and ORWRITE (32)), and the name of the command is used in a sentence without any CDB length descriptor (e.g., ORWRITE), then the condition described in the sentence applies to all CDB lengths for that command.

Names of fields and state variables are in small uppercase (e.g. NAME). When a field or state variable name contains acronyms, uppercase letters may also be used for readability (e.g., the LOGERR bit). Normal case is used when the contents of a field or state variable are being discussed. Fields or state variables containing only one bit are usually referred to as the NAME bit instead of the NAME field.

Lists sequenced by lowercase or uppercase letters show no ordering relationship between the listed items.

EXAMPLE 1 - The following list shows no relationship between the listed items:

a) red (i.e., one of the following colors):
   A) crimson: or
   B) amber;
b) blue; or
c) green.

Lists sequenced by numbers show an ordering relationship between the listed items.

EXAMPLE 2 -The following list shows an ordered relationship between the named items:

1) top;
2) middle; and
3) bottom.

Lists are associated with an introductory paragraph or phrase, and are numbered relative to that paragraph or phrase (i.e., all lists begin with an a) or 1) entry).

Documents
Document Sharing Hub
Full document details: BS ISO/IEC 14776-323:2017

In the event of conflicting information the precedence for requirements defined in this standard is:

1) text;
2) tables; then
3) figures.

Tables show data format and values. Not all tables or figures are fully described in the text.

Notes and examples do not constitute any requirements for implementers, and notes are numbered consecutively throughout this standard.

3.6 Numeric and character conventions

3.6.1 Numeric conventions

A binary number is represented in this standard by any sequence of digits comprised of only the Western-Arabic numerals 0 and 1 immediately followed by a lower-case b (e.g., 0101b). Underscores are included between characters in binary number representations to increase readability or delineate field boundaries (e.g., 0_0101_1010b).

A hexadecimal number is represented in this standard by any sequence of digits comprised of only the Western-Arabic numerals 0 to 9 and/or the upper-case English letters A to F immediately followed by a lower-case h (e.g., FA23h). Underscores are included in hexadecimal number representations to increase readability or delineate field boundaries (e.g., B_FD8C_FA23h).

A decimal number is represented in this standard by any sequence of digits comprised of only the Western-Arabic numerals 0 to 9 not immediately followed by a lower-case b or lower-case h (e.g., 25).

A range of numeric values is represented in this standard in the form “a to z”, where a is the first value included in the range, all values between a and z are included in the range, and z is the last value included in the range (e.g., the representation “0h to 3h” includes the values 0h, 1h, 2h, and 3h).

This standard uses the following conventions for representing decimal numbers:

a) the decimal separator (i.e., separating the integer and fractional portions of the number) is a period;
b) the thousands separator (i.e., separating groups of three digits in a portion of the number) is a space; and
c) the thousands separator is used in both the integer portion and the fraction portion of a number.

Table 1 shows some examples of decimal numbers represented using various conventions.

Table 1 – Numbering convention examples

ISO/IEC	United States	This standard
0,6	0.6	0.6
3,141 592 65	3.14159265	3.141 592 65
1 000	1,000	1 000
1 323 462,95	1,323,462.95	1 323 462.95

A decimal number represented in this standard with an overline over one or more digits following the decimal point is a number where the overlined digits are infinitely repeating (e.g., $666.\overline{6}$ means 666.666 666... or 666 $^{2}/_{3}$, and $12.\overline{142\ 857}$ means 12.142 857 142 857... or 12 $^{1}/_{7}$).

3.6.2 Units of measure

This standard represents values using both decimal units of measure and binary units of measure. Values are represented by the following formats:

a) for values based on decimal units of measure:
   1) numerical value (e.g., 100);

Documents
Document Sharing Hub
Full document details: BS ISO/IEC 14776-323:2017

2) space;
3) prefix symbol and unit:
   1) decimal prefix symbol (e.g., M) (see table 2); and
   2) unit abbreviation;

and

b) for values based on binary units of measure:
   1) numerical value (e.g., 1 024);
   2) space;
   3) prefix symbol and unit:
      1) binary prefix symbol (e.g., Gi) (see table 2); and
      2) unit abbreviation.

Table 2 compares the prefix, symbols, and power of the binary and decimal units.

Table 2 – Comparison of decimal prefixes and binary prefixes

Decimal			Binary		
Prefix name	**Prefix symbol**	**Power (base-10)**	**Prefix name**	**Prefix symbol**	**Power (base-2)**
kilo	k	10^3	kibi	Ki	2^{10}
mega	M	10^6	mebi	Mi	2^{20}
giga	G	10^9	gibi	Gi	2^{30}
tera	T	10^{12}	tebi	Ti	2^{40}
peta	P	10^{15}	pebi	Pi	2^{50}
exa	E	10^{18}	exbi	Ei	2^{60}
zetta	Z	10^{21}	zebi	Zi	2^{70}
yotta	Y	10^{24}	yobi	Yi	2^{80}

Documents
Document Sharing Hub
Full document details: BS ISO/IEC 14776-323:2017

3.7 State machine conventions

Figure 1 shows how state machines are described in this standard.

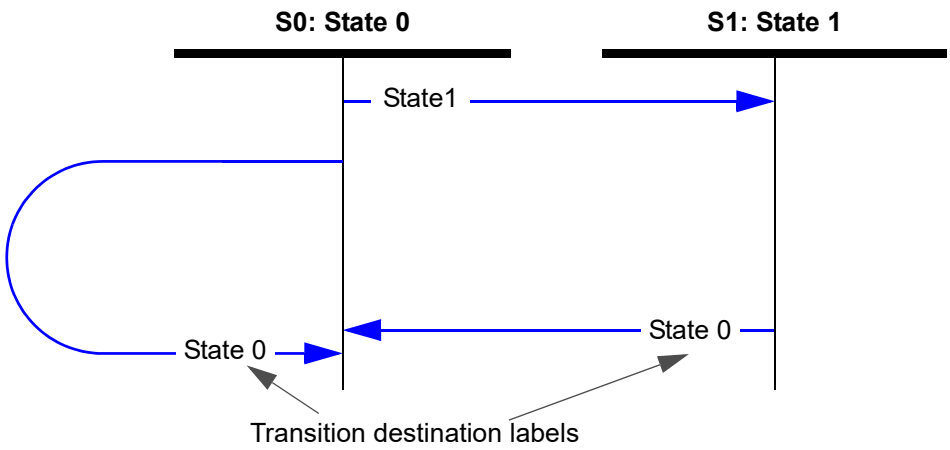

Figure 1 – Example state machine figure

The state machine figure is followed by subclauses describing the states and state transitions.

Each state and state transition is described in the list with particular attention to the conditions that cause the transition to occur and special conditions related to the transition.

A system specified in this manner has the following properties:

a) time elapses only within discrete states; and
b) state transitions are logically instantaneous.

Documents
Document Sharing Hub
Full document details: BS ISO/IEC 14776-323:2017

4 Direct access block device type model

4.1 Direct access block device type model introduction

Table 3 shows the topics in clause 4 and a reference to the subclause where each topic is described.

Table 3 – Direct access block device type model topics

Topic	Reference
Direct access block device type model overview	4.2
Media examples	4.3
Removable media	4.4
Logical blocks	4.5
Physical blocks	4.6
Logical block provisioning	4.7
Data de-duplication	4.8
Ready state	4.9
Initialization	
Sanitize operations	4.11
Write protection	4.12
Medium defects	4.13
Write and unmap failures	4.14
Caches	4.15
Implicit HEAD OF QUEUE command processing	4.16
Reservations	4.17
Error reporting	4.18
Model for XOR commands	4.19
Rebuild assist mode	4.20
START STOP UNIT and power conditions	4.21
Protection information model	4.22
Grouping function	4.23
Background scan operations	4.24
Association between commands and CbCS permission bits	4.25
Deferred microcode activation	4.26
Model for uninterrupted sequences on LBA ranges	4.27
Referrals	4.28
ORWRITE commands	4.29
Block device ROD token operations	4.30

Documents
Document Sharing Hub
Full document details: BS ISO/IEC 14776-323:2017

4.2 Direct access block device type model

4.2.1 Direct access block device type model overview

SCSI devices that conform to this standard are referred to as direct access block devices (e.g., hard disk drives, removable rigid disks, and solid state drives).

This standard is to be used in conjunction with SAM-5, SPC-4, SCC-2, and SES-2.

Direct access block devices store data in logical blocks for later retrieval.

Logical blocks are stored by a process that causes localized changes or transitions within a medium. The changes made to the medium to store the logical blocks may be volatile (i.e., not retained through power cycles) or non-volatile (i.e., retained through power cycles).

4.2.2 Logical block access command types

The following are logical block access command types:

a) read commands;
b) unmap commands;
c) verify commands;
d) write commands; and
e) other commands (e.g., a FORMAT UNIT command or a SANITIZE command).

See table 31 for a list of commands for direct access block devices, including the logical block access command type. Some commands may be more than one type of logical block access command (e.g., a COMPARE AND WRITE command is both a read command and a write command).

4.2.3 Logical block access operation types

Each named command type (see 4.2.2) is processed by performing one or more of the following:

a) read operations;
b) unmap operations;
c) verify operations; and
d) write operations.

A device server that supports optional features (e.g., caches (see 4.15)) may be required to support additional requirements (e.g., cache coherency, LBA mapping resource allocations) that are related to those features for specific operations (e.g., read operations, write operations).

In a device server that does not support any optional features:

a) any read operation causes only read medium operations to be performed;
b) any verify operation causes only verify medium operations to be performed; and
c) any write operation causes only write medium operations to be performed.

The requirements for any optional feature (e.g., caches) may include additional requirements for the operations described in this subclause.

If an optional feature (e.g., caches) defines requirements for read operations, then the device server shall support those requirements for both verify operations and read operations.

4.3 Media examples

4.3.1 Media examples overview

Examples of types of media used by the direct access block device are:

a) a rotating medium (see 4.3.2); and
b) a memory medium (see 4.3.3).

Documents
Document Sharing Hub
Full document details: BS ISO/IEC 14776-323:2017

Other types of media are possible.

4.3.2 Rotating media

A rotating medium is one or more spinning disks, each coated with a magnetic material that allows flux changes to be induced and recorded. An actuator positions a read-write head radially across the spinning disk, allowing the device to randomly read or write the information at any radial position. Data is stored by using the write portion of the head to record flux changes and the recorded data is read by using the read portion of the head.

The circular path followed by the read-write head at a particular radius is called a track. A track is divided into sectors each containing blocks of stored data. If there is more than one disk spinning on a single axis and the actuator has a read-write head to access each of the disk surfaces, then the collection of tracks at a particular radius is called a cylinder.

A logical block is stored in one or more sectors, or a sector may store more than one logical block. Sectors may also contain information for accessing, synchronizing, and protecting the integrity of the logical blocks.

A rotating medium direct access block device is ready if:

a) the disks are rotating at the correct speed; and
b) the read-write circuitry is powered and ready to access the data.

A START STOP UNIT command (see 5.25) may be required to bring the logical unit to the ready state.

The rotating medium in a direct access block device is non-volatile.

4.3.3 Memory media

A memory medium is solid state, random access memory (RAM) (e.g., static RAM (SRAM), dynamic RAM (DRAM), magnetoresistive RAM (MRAM), ferroelectric RAM (FeRAM), or flash memory).

A memory medium direct access block device may be ready after power on and may not require a START STOP UNIT command (see 5.25) to bring the logical unit to a ready state.

These logical units may be nonmechanical, and logical blocks may be accessed with similar access times regardless of their location on the medium. Memory medium direct access block devices may store less data than disks or tapes and may be volatile.

A memory medium may be volatile (e.g., SRAM or DRAM) or non-volatile (e.g., SRAM or DRAM with battery backup, MRAM, FeRAM, or flash memory).

4.4 Removable media

The medium may be removable or non-removable. A removable medium may be contained within a cartridge or jacket to prevent damage to the recording surfaces.

A removable medium has an attribute of being mounted or demounted on a suitable transport mechanism in a direct access block device. A removable medium is mounted when the direct access block device is capable of accessing its medium (e.g., performing read medium operations and write medium operations). A removable medium is demounted at any other time (e.g., during loading, unloading, or storage).

An application client may check whether a removable medium is mounted by sending a TEST UNIT READY command (see SPC-4). A direct access block device containing a removable medium may not be accessible for read operations, unmap operations, and write operations until it receives a START STOP UNIT command with the START bit set to one (see 5.25).

If a direct access block device implements cache, either volatile or non-volatile, then the device server ensures that all logical blocks on the medium contain the most recent logical block data prior to permitting demounting of the removable medium.

Documents
Document Sharing Hub
Full document details: BS ISO/IEC 14776-323:2017

If the medium in a direct access block device is removable, and the medium is removed, then the device server shall establish a unit attention condition with the additional sense code set to the appropriate value (e.g., MEDIUM NOT PRESENT). The PREVENT ALLOW MEDIUM REMOVAL command (see 5.10) allows an application client to restrict the demounting of the removable medium.

If an application client sends a START STOP UNIT command to request that the removable medium to be ejected and the direct access block device is prevented from demounting the medium by a previous PREVENT ALLOW MEDIUM REMOVAL command, then the START STOP UNIT command is terminated by the device server.

4.5 Logical Blocks

Logical blocks are stored on the medium. Logical blocks:

a) contain logical block data that contains:
   A) user data; and
   B) protection information, if any;
   and
b) may contain additional information (e.g., an ECC which may be used for medium defect management (see 4.13)), which may not be accessible to the application client.

The number of bytes of user data contained in each logical block is the logical block length. The logical block length is greater than or equal to one byte and should be an even number of bytes (e.g., 512 bytes, 520 bytes, 4 096 bytes, or 4 104 bytes). The logical block length does not include the length of protection information, if any, and additional information, if any, that are contained in the logical block. The logical block length is the same for all logical blocks in the logical unit. The LOGICAL BLOCK LENGTH field in the READ CAPACITY (10) parameter data (see 5.15.2) and the READ CAPACITY (16) parameter data (see 5.16.2) indicates the logical block length. The FORMAT UNIT command (see 5.3) and the mode parameter block descriptor (see 6.5.2) are used together by an application client to change the logical block length in direct access block devices that support changeable logical block lengths.

Each logical block is referenced by a unique LBA, which is represented as either four bytes in length or eight bytes in length. The LBAs on a logical unit shall begin with zero and shall be contiguous up to the last LBA on the logical unit. The last LBA is [n-1], where [n] is the number of logical blocks accessible by the application client. The RETURNED LOGICAL BLOCK ADDRESS field in the READ CAPACITY (10) parameter data (see 5.15.2) and the READ CAPACITY (16) parameter data (see 5.16.2) indicates the value of [n-1]. Each LBA has a logical block provisioning state (see 4.7) of mapped, deallocated, or anchored.

Some commands support only four-byte LOGICAL BLOCK ADDRESS fields (e.g., READ (10), and WRITE (10)).

If the capacity of the logical unit exceeds that accessible with four-byte LBAs, then the device server returns the RETURNED LOGICAL BLOCK ADDRESS field set to FFFF_FFFFh in the READ CAPACITY (10) parameter data, indicating that an application client should:

a) enable descriptor format sense data (see SPC-4) in the Control mode page (see SPC-4) and in any REQUEST SENSE commands (see SPC-4) it sends; and
b) use commands with eight-byte LOGICAL BLOCK ADDRESS fields (e.g., READ (16), and WRITE (16)).

NOTE 1 - If a command requests access to an LBA greater than FFFF_FFFFh, fixed format sense data is used, and an error occurs for that LBA, then there is no field in the sense data large enough to report that LBA as having an error (see 4.18).

If a command is received that references or attempts to access a logical block that exceeds the capacity of the medium, then the device server shall terminate the command (e.g., with CHECK CONDITION status with the sense key set to ILLEGAL REQUEST and the additional sense code set to LOGICAL BLOCK ADDRESS OUT OF RANGE). The device server:

a) should terminate the command before processing; and
b) may terminate the command after the device server has transferred some, all, or none of the data.

Documents
Document Sharing Hub
Full document details: BS ISO/IEC 14776-323:2017

The location of a logical block on the medium is not required to have a relationship to the location of any other logical block. However, in a direct access block device with rotating media (see 4.3.2), the time to access a logical block at LBA [x+1] after accessing LBA [x] is often less than the time to access some other logical block.

4.6 Physical blocks

A physical block is a set of data bytes on the medium accessed by the device server as a unit. A physical block may contain:

a) a portion of a logical block (i.e., there are multiple physical blocks in the logical block)(e.g., a physical block length of 512 bytes with a logical block length of 2 048 bytes);
b) a single complete logical block; or
c) more than one logical block (i.e., there are multiple logical blocks in the physical block)(e.g., a physical block length of 4 096 bytes with a logical block length of 512 bytes).

Each physical block may include additional information (e.g., an ECC which may be used for medium defect management (see 4.13)), which may not be accessible to the application client.

If the device server supports the COR_DIS bit and/or the WR_UNCOR bit in a WRITE LONG command (see 5.41 and 5.42), then the device server shall have the capability of marking individual logical blocks as containing pseudo unrecovered errors with correction enabled or with correction disabled.

Logical blocks may or may not be aligned to physical block boundaries. A mechanism for establishing the alignment is not defined by this standard.

Documents
Document Sharing Hub
Full document details: BS ISO/IEC 14776-323:2017

Figure 2 shows examples of where there are one or more physical blocks per logical block, and LBA 0 is aligned to a physical block boundary. The LOGICAL BLOCKS PER PHYSICAL BLOCK EXPONENT field and the LOWEST ALIGNED LOGICAL BLOCK ADDRESS field in the READ CAPACITY (16) parameter data (see 5.16.2) indicate the alignment.

The LOGICAL BLOCKS PER PHYSICAL BLOCK EXPONENT field is set to 0h (i.e., indicating one or more physical blocks per logical block).
The LOWEST ALIGNED LOGICAL BLOCK ADDRESS field is set to 0000h (i.e., indicating that LBA 0 is located at the beginning of a physical block).

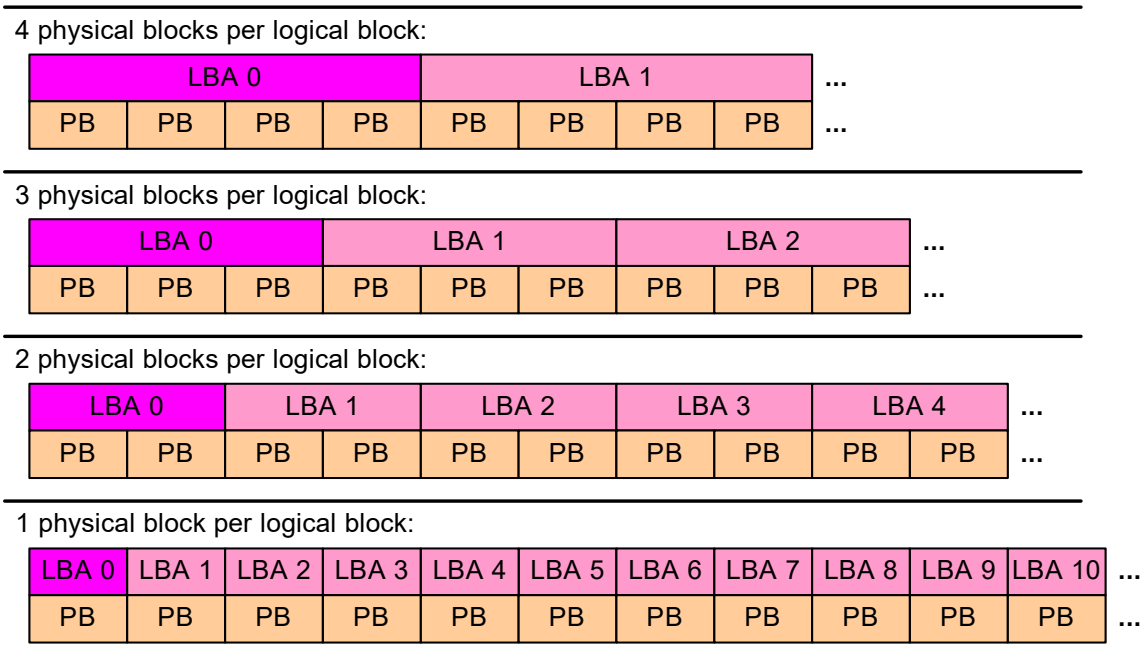

Key:
LBA n = logical block with LBA n
PB = physical block

Figure 2 – One or more physical blocks per logical block examples

Documents
Document Sharing Hub
Full document details: BS ISO/IEC 14776-323:2017

Figure 3 shows examples of where there are one or more logical blocks per physical block, and LBA 0 is aligned to a physical block boundary. The LOGICAL BLOCKS PER PHYSICAL BLOCK EXPONENT field and the LOWEST ALIGNED LOGICAL BLOCK ADDRESS field in the READ CAPACITY (16) parameter data (see 5.16.2) indicate the alignment.

The LOGICAL BLOCKS PER PHYSICAL BLOCK EXPONENT field is set to a non-zero value (i.e., indicating more than one logical block per physical block).
The LOWEST ALIGNED LOGICAL BLOCK ADDRESS field is set to 0000h (i.e., indicating that LBA 0 is located at the beginning of a physical block).

LOGICAL BLOCKS PER PHYSICAL BLOCK EXPONENT field set to 1h (i.e., 2^1 logical blocks per physical block):

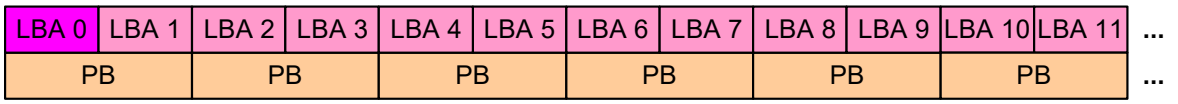

LOGICAL BLOCKS PER PHYSICAL BLOCK EXPONENT field set to 2h (i.e., 2^2 logical blocks per physical block):

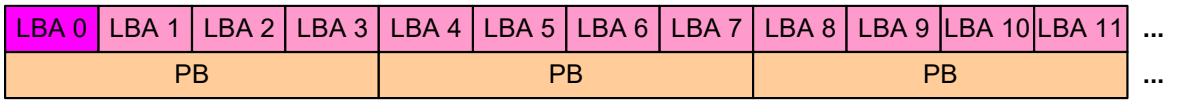

LOGICAL BLOCKS PER PHYSICAL BLOCK EXPONENT field set to 3h (i.e., 2^3 logical blocks per physical block):

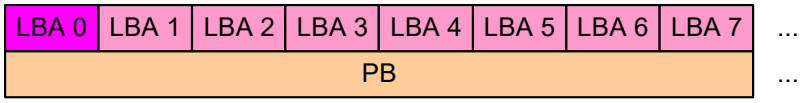

Key:
LBA n = logical block with LBA n
PB = physical block

Figure 3 – One or more logical blocks per physical block examples

Figure 4 shows examples of where there are two logical blocks per physical block, and different LBAs are aligned to physical block boundaries. The LOGICAL BLOCKS PER PHYSICAL BLOCK EXPONENT field and the LOWEST ALIGNED LOGICAL BLOCK ADDRESS field in the READ CAPACITY (16) parameter data (see 5.16.2) indicate the alignment.

LOGICAL BLOCKS PER PHYSICAL BLOCK EXPONENT field set to 1h (i.e., 2^1 logical blocks per physical block):

LOWEST ALIGNED LOGICAL BLOCK ADDRESS field set to 0000h:

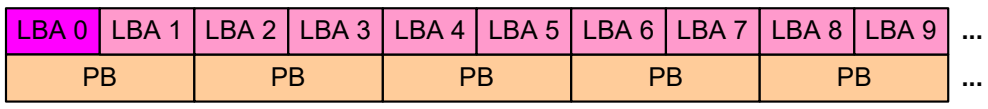

LOWEST ALIGNED LOGICAL BLOCK ADDRESS field set to 0001h:

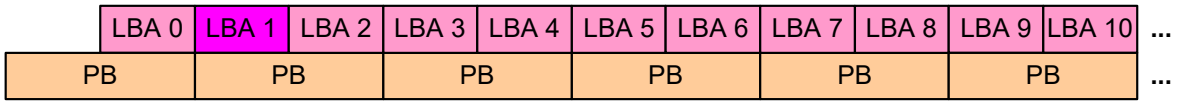

Key:
LBA n = logical block with LBA n
PB = physical block

Figure 4 – Two logical blocks per physical block alignment examples

Documents
Document Sharing Hub
Full document details: BS ISO/IEC 14776-323:2017

Figure 5 shows examples of where there are four logical blocks per physical block, and different LBAs are aligned to physical block boundaries. The LOGICAL BLOCKS PER PHYSICAL BLOCK EXPONENT field and the LOWEST ALIGNED LOGICAL BLOCK ADDRESS field in the READ CAPACITY (16) parameter data (see 5.16.2) indicate the alignment.

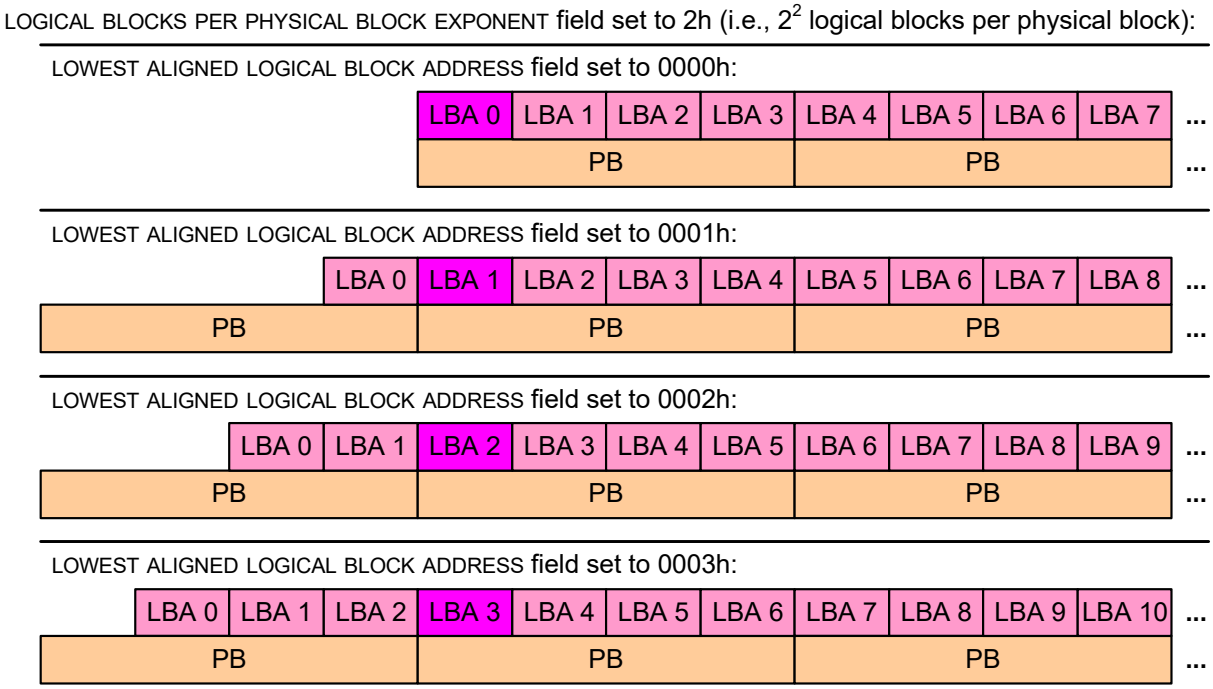

Key:
LBA n = logical block with LBA n
PB = physical block

Figure 5 – Four logical blocks per physical block alignment examples

If there is more than one logical block per physical block, then not all of the logical blocks are aligned to the physical block boundaries. When using logical block access commands (see 4.2.2), application clients should:

a) specify an LBA that is aligned to a physical block boundary; and
b) access an integral number of physical blocks, provided that the access does not go beyond the last LBA on the medium.

See annex E for an example method in which application clients may use alignment information to determine optimal performance for logical block access.

Documents
Document Sharing Hub
Full document details: BS ISO/IEC 14776-323:2017

4.7 Logical block provisioning

4.7.1 Logical block provisioning overview

Each LBA in a logical unit is either mapped or unmapped. For LBAs that are mapped, there is a known relationship between the LBA and one or more physical blocks that contain logical block data. For LBAs that are unmapped, the relationship between the LBA and a physical block is not defined. Figure 6 shows two examples of the relationship between mapped and unmapped LBAs and physical blocks in a logical unit. One example shows one LBA per physical block and one example shows two LBAs per physical block. The LOGICAL BLOCKS PER PHYSICAL BLOCK EXPONENT field is defined in the READ CAPACITY (16) parameter data (see 5.16.2).

LOGICAL BLOCKS PER PHYSICAL BLOCK EXPONENT field set to 0h (i.e., 2^0 logical blocks per physical block):

LBA 0	LBA 1	LBA 2	LBA 3	LBA 4	LBA 5	LBA 6	LBA 7
PB	PB	Unmapped	PB	Unmapped	Unmapped	PB	PB

LOGICAL BLOCKS PER PHYSICAL BLOCK EXPONENT field set to 1h (i.e., 2^1 logical blocks per physical block):

LBA 0	LBA 1	LBA 2	LBA 3	LBA 4	LBA 5	LBA 6	LBA 7
PB		Unmapped		PB		Unmapped	

Key:
LBA n = logical block with LBA n
PB = physical block
Unmapped = the relationship between the LBA(s) and a physical block is not defined

Figure 6 – Examples of the relationship between mapped and unmapped LBAs and physical blocks

Each unmapped LBA is either anchored or deallocated. Anchored and deallocated are states in the LBP state machine (see 4.7.4) that have the following properties:

a) a write command that specifies an anchored LBA does not require allocation of additional LBA mapping resources for that LBA; and
b) a write command that specifies a deallocated LBA may require allocation of LBA mapping resources.

Depending on the logical block provisioning types (see table 4), the quantity of LBA mapping resources available to a logical unit may be greater than, equal to, or less than the quantity required to store logical block data for every LBA.

Table 4 list the logical block provisioning states supported by each type of logical block provisioning.

Table 4 – Logical block provisioning states supported by logical block provisioning type

Type	Logical block provisioning states			Reference
	Mapped	Unmapped		
		Anchored	Deallocated	
Fully provisioned	Mandatory	Prohibited	Prohibited	4.7.2
Resource provisioned	Mandatory	Mandatory	Prohibited	4.7.3.2
Thin provisioned	Mandatory	Optional	Mandatory	4.7.3.3

Documents
Document Sharing Hub
Full document details: BS ISO/IEC 14776-323:2017

4.7.2 Fully provisioned logical unit

The device server shall map every LBA in a fully provisioned logical unit. A fully provisioned logical unit shall provide enough LBA mapping resources to contain all logical blocks for the logical unit's capacity as reported in the READ CAPACITY (10) parameter data (see 5.15.2) and the READ CAPACITY (16) parameter data (see 5.16.2). The device server shall not cause any LBA on a fully provisioned logical unit to become unmapped (i.e., anchored or deallocated).

A fully provisioned logical unit does not support logical block provisioning management (see 4.7.3). A fully provisioned logical unit may support the GET LBA STATUS command (see 5.4).

The device server in a fully provisioned logical unit shall set the LBPME bit to zero in the READ CAPACITY (16) parameter data (see 5.16.2).

4.7.3 Logical block provisioning management

4.7.3.1 Logical block provisioning management overview

A logical unit that supports logical block provisioning management (i.e., implements unmapped LBAs, unmap operations, and related actions) shall be either:

a) resource provisioned (see 4.7.3.2); or
b) thin provisioned (see 4.7.3.3).

A logical unit that supports logical block provisioning management shall implement the LBP state machine (see 4.7.4) for each LBA.

The device server in a logical unit that supports logical block provisioning management:

a) shall support the Logical Block Provisioning VPD page (see 6.6.4);
b) may supply a provisioning group designation descriptor as defined in the Logical Block Provisioning VPD page;
c) may support logical block provisioning thresholds (see 4.7.3.7.1);
d) may support the GET LBA STATUS command (see 5.4);
e) should support the Block Limits VPD page (see 6.6.3); and
f) shall support at least one of the following unmap mechanisms:
   A) the UNMAP command (see 5.28);
   B) the UNMAP bit in the WRITE SAME (10) command (see 5.43);
   C) the UNMAP bit in the WRITE SAME (16) command (see 5.44); or
   D) the UNMAP bit in the WRITE SAME (32) command (see 5.45).

If the device server supports:

a) the UNMAP bit in the WRITE SAME (10) command or in the WRITE SAME (16) command; and
b) the WRITE SAME (32) command (see 5.45),

then the device server shall support the UNMAP bit in the WRITE SAME (32) command.

If a device server supports the UNMAP command and the Block Limits VPD page, then the device server shall:

a) set the MAXIMUM UNMAP LBA COUNT field in the Block Limits VPD page to a value greater than or equal to one; and
b) set the MAXIMUM UNMAP DESCRIPTOR COUNT field in the Block Limits VPD page to a value greater than or equal to one.

4.7.3.2 Resource provisioned logical unit

A resource provisioned logical unit shall support logical block provisioning management (see 4.7.3.1).

The device server in a resource provisioned logical unit assigns mapping resources to every LBA for the capacity indicated by the RETURNED LOGICAL BLOCK ADDRESS field in the READ CAPACITY (10) parameter data (see 5.15.2) and the READ CAPACITY (16) parameter data (see 5.16.2).

Documents
Document Sharing Hub
Full document details: BS ISO/IEC 14776-323:2017

The device server shall map or anchor (i.e., not deallocate) each LBA in a resource provisioned logical unit. A resource provisioned logical unit shall provide LBA mapping resources sufficient to map all LBAs for the logical unit's capacity as indicated in the RETURNED LOGICAL BLOCK ADDRESS field of the READ CAPACITY (10) parameter data (see 5.15.2) and the READ CAPACITY (16) parameter data (see 5.16.2). A resource provisioned logical unit may provide resources in excess of this requirement. The device server shall not cause any LBA on a resource provisioned logical unit to become deallocated.

The device server in a resource provisioned logical unit shall set:

a) the LBPME bit to one in the READ CAPACITY (16) parameter data (see 5.16.2);
b) the PROVISIONING TYPE field to 001b (i.e., resource provisioned) in the Logical Block Provisioning VPD page (see 6.6.4); and
c) the ANC_SUP bit to one in the Logical Block Provisioning VPD page.

The initial condition of every LBA in a resource provisioned logical unit is anchored (see 4.7.4.1).

4.7.3.3 Thin provisioned logical unit

A thin provisioned logical unit shall support logical block provisioning management (see 4.7.3.1).

The device server in a thin provisioned logical unit may indicate a larger capacity in the RETURNED LOGICAL BLOCK ADDRESS field in the READ CAPACITY (10) parameter data (see 5.15.2) and the READ CAPACITY (16) parameter data (see 5.16.2) than the number of LBA mapping resources available for mapping LBAs in the logical unit.

The device server shall map, anchor, or deallocate each LBA in a thin provisioned logical unit (see table 4). A thin provisioned logical unit is not required to provide LBA mapping resources sufficient to map all LBAs for the logical unit's capacity as indicated in the RETURNED LOGICAL BLOCK ADDRESS field of the READ CAPACITY (10) parameter data (see 5.15.2) and the READ CAPACITY (16) parameter data (see 5.16.2).

If the logical unit does not support anchored LBAs (i.e, the ANC_SUP bit is set to zero in the Logical Block Provisioning VPD page (see 6.6.4)), then:

a) every unmapped LBA in the logical unit shall be deallocated; and
b) the device server shall terminate every command that specifies anchoring an LBA (e.g., a WRITE SAME command with the ANCHOR bit set to one (see 5.43)).

The device server in a thin provisioned logical unit shall set:

a) the LBPME bit to one in the READ CAPACITY (16) parameter data (see 5.16.2); and
b) the PROVISIONING TYPE field to 010b (i.e., thin provisioned) in the Logical Block Provisioning VPD page (see 6.6.4).

The initial condition of every LBA in a thin provisioned logical unit is deallocated (see 4.7.4.1).

4.7.3.4 Unmapping LBAs

4.7.3.4.1 Processing unmap requests

Application clients use unmap commands (see table 31) to request that LBAs be unmapped. For each LBA that is requested to be unmapped, the device server shall:

a) perform an unmap operation (see 4.7.3.4.2) on the LBA; or
b) make no change to the logical block provisioning state of the LBA.

The application client determines the logical block provisioning state of LBAs using the GET LBA STATUS command (see 5.4).

4.7.3.4.2 Unmap operations

An unmap operation:

a) results in a single LBA becoming either deallocated or anchored;
b) may change the relationship between one LBA and one or more physical blocks; and

Documents
Document Sharing Hub
Full document details: BS ISO/IEC 14776-323:2017