BS ISO/IEC 17982:2021

BSI Standards Publication

Information technology — Telecommunications and information exchange between systems — Close capacitive coupling communication physical layer (CCCC PHY)

Documents
Document Sharing Hub

Full document details: BS ISO/IEC 17982:2021

National foreword

This British Standard is the UK implementation of ISO/IEC 17982:2021.

The UK participation in its preparation was entrusted to Technical Committee IST/6, Data communications.

A list of organizations represented on this committee can be obtained on request to its committee manager.

Contractual and legal considerations

This publication has been prepared in good faith, however no representation, warranty, assurance or undertaking (express or implied) is or will be made, and no responsibility or liability is or will be accepted by BSI in relation to the adequacy, accuracy, completeness or reasonableness of this publication. All and any such responsibility and liability is expressly disclaimed to the full extent permitted by the law.

This publication is provided as is, and is to be used at the recipient's own risk.

The recipient is advised to consider seeking professional guidance with respect to its use of this publication.

This publication is not intended to constitute a contract. Users are responsible for its correct application.

© The British Standards Institution 2021
Published by BSI Standards Limited 2021

ISBN 978 0 539 07017 0

ICS 35.100.10

Compliance with a British Standard cannot confer immunity from legal obligations.

This British Standard was published under the authority of the Standards Policy and Strategy Committee on 31 May 2021.

Amendments/corrigenda issued since publication

Date	Text affected

Documents
Document Sharing Hub

Full document details: BS ISO/IEC 17982:2021

INTERNATIONAL STANDARD

ISO/IEC 17982

Second edition
2021-04

Information technology — Telecommunications and information exchange between systems — Close capacitive coupling communication physical layer (CCCC PHY)

Technologies de l'information — Téléinformatique — Couche physique pour communication par couplage capacitif fermé

Reference number
ISO/IEC 17982:2021(E)

Documents
Document Sharing Hub
© ISO/IEC 2021

Full document details: BS ISO/IEC 17982:2021

COPYRIGHT PROTECTED DOCUMENT

© ISO/IEC 2021

All rights reserved. Unless otherwise specified, or required in the context of its implementation, no part of this publication may be reproduced or utilized otherwise in any form or by any means, electronic or mechanical, including photocopying, or posting on the internet or an intranet, without prior written permission. Permission can be requested from either ISO at the address below or ISO's member body in the country of the requester.

ISO copyright office
CP 401 • Ch. de Blandonnet 8
CH-1214 Vernier, Geneva
Phone: +41 22 749 01 11
Email: copyright@iso.org
Website: www.iso.org

Published in Switzerland

© ISO/IEC 2021 – All rights reserved

Documents
Document Sharing Hub

Full document details: BS ISO/IEC 17982:2021

Contents

Page

Foreword ... **iv**

1 Scope ... **1**

2 Normative references ... **1**

3 Terms, definitions and abbreviated terms ... **1**
3.1 Terms and definitions ... 1
3.2 Abbreviated terms ... 1

4 Conventions and notations ... **2**

5 Conformance ... **2**

6 Architecture ... **2**

7 Reference plate-electrode assembly ... **5**

8 PHY parameters ... **6**
8.1 Voltage conditions ... 6
8.2 Bit representation ... 6
8.2.1 Bit duration ... 6
8.2.2 Bit encoding ... 7
8.3 Transmission ... 7
8.4 DC balance of a P-PDU ... 7
8.5 Reception of a P-PDU ... 8

9 P-PDU ... **8**
9.1 Structure ... 8
9.2 Space ... 8
9.3 Level adjust ... 8
9.4 Pre-amble and Sync ... 9
9.5 Attribute ... 9
9.6 TDS number ... 10
9.7 Sequence number ... 10
9.7.1 Initial and range ... 10
9.7.2 Acknowledgement ... 10
9.8 Payload ... 10
9.9 CRC ... 10
9.10 Post-amble ... 10
9.11 Null P-PDU ... 10
9.12 Data P-PDU ... 10

10 PHY data unit (P-DU) ... **10**

11 Segmentation and reassembly ... **11**

12 TDS ... **11**

13 LBT and synchronisation ... **12**
13.1 LBT ... 12
13.2 Synchronisation ... 12

14 Association procedure ... **13**

15 Communication ... **15**
15.1 General ... 15
15.2 Full duplex communication ... 15
15.3 Broadcast communication ... 17

Annex A (normative) **Tests** ... **19**

Annex B (informative) **Guidance for implementation of this document** ... **57**

Bibliography ... **58**

© ISO/IEC 2021 – All rights reserved

AVA Documents
Document Sharing Hub

Full document details: BS ISO/IEC 17982:2021

Foreword

ISO (the International Organization for Standardization) and IEC (the International Electrotechnical Commission) form the specialized system for worldwide standardization. National bodies that are members of ISO or IEC participate in the development of International Standards through technical committees established by the respective organization to deal with particular fields of technical activity. ISO and IEC technical committees collaborate in fields of mutual interest. Other international organizations, governmental and non-governmental, in liaison with ISO and IEC, also take part in the work.

The procedures used to develop this document and those intended for its further maintenance are described in the ISO/IEC Directives, Part 1. In particular, the different approval criteria needed for the different types of document should be noted. This document was drafted in accordance with the editorial rules of the ISO/IEC Directives, Part 2 (see www.iso.org/directives or www.iec.ch/members_experts/refdocs).

Attention is drawn to the possibility that some of the elements of this document may be the subject of patent rights. ISO and IEC shall not be held responsible for identifying any or all such patent rights. Details of any patent rights identified during the development of the document will be in the Introduction and/or on the ISO list of patent declarations received (see www.iso.org/patents) or the IEC list of patent declarations received (see patents.iec.ch).

Any trade name used in this document is information given for the convenience of users and does not constitute an endorsement.

For an explanation of the voluntary nature of standards, the meaning of ISO specific terms and expressions related to conformity assessment, as well as information about ISO's adherence to the World Trade Organization (WTO) principles in the Technical Barriers to Trade (TBT) see www.iso.org/iso/foreword.html. In the IEC, see www.iec.ch/understanding-standards.

This document was prepared by Joint Technical Committee ISO/IEC JTC 1, *Information technology*, Subcommittee SC 6, *Telecommunications and information exchange between systems* in cooperation with Ecma International.

This second edition cancels and replaces the first edition (ISO/IEC 17982:2012), which has been technically revised.

The main changes compared to the previous edition are as follows:

— The document has been fully aligned with the editorial rules in ISO/IEC Directives, Part 2.

— Annex B has been added to guide an implementation for small size and low power devices.

Any feedback or questions on this document should be directed to the user's national standards body. A complete listing of these bodies can be found at www.iso.org/members.html and www.iec.ch/national-committees.

© ISO/IEC 2021 – All rights reserved
Documents
Document Sharing Hub
Full document details: BS ISO/IEC 17982:2021

Information technology — Telecommunications and information exchange between systems — Close capacitive coupling communication physical layer (CCCC PHY)

1 Scope

This document specifies the close capacitive coupling communication physical layer (CCCC PHY) for full duplex and broadcast communication in time slots on frequency division multiplex channels.

NOTE An implementation for small size and low power devices is provided in Annex B.

2 Normative references

The following documents are referred to in the text in such a way that some or all of their content constitutes requirements of this document. For dated references, only the edition cited applies. For undated references, the latest edition of the referenced document (including any amendments) applies.

ISO/IEC 7498-1, *Information technology — Open Systems Interconnection — Basic Reference Model: The Basic Model*

ITU-T Rec. V.41, *Data communication over the telephone network — Code-independent error-control system*

3 Terms, definitions and abbreviated terms

3.1 Terms and definitions

For the purposes of this document, the terms and definitions given in ISO/IEC 7498-1 and the following apply.

ISO and IEC maintain terminological databases for use in standardization at the following addresses:

— ISO Online browsing platform: available at https://www.iso.org/obp

— IEC Electropedia: available at http://www.electropedia.org/

3.1.1
listener
entity that does not initiate communication

3.1.2
talker
entity that initiates communication

3.2 Abbreviated terms

CRC	cyclic redundancy check
CCCC	close capacitive coupling communication
DUT	device under test

© ISO/IEC 2021 – All rights reserved

Documents
Document Sharing Hub
Full document details: BS ISO/IEC 17982:2021

FDC	frequency division channel
LBT	listen before talk
LEN	length
P-DU	PHY data unit
P-PDU	PHY PDU
PHY	physical layer
RFU	reserved for future use
TDS	time division slot

4 Conventions and notations

The following conventions and notations apply in this document.

— A sequence of characters of 'A', 'B', 'C", 'D, 'E' or 'F' and decimal digits in parentheses represent numbers in hexadecimal notation unless followed by a 'b' character.

— Numbers in binary notation and bit patterns are represented by a sequence of 0 and 1 digits or 'X' characters in parentheses followed by a 'b' character, e.g. (0X11X010)b. Where X indicates that the setting of a bit is not specified, and the leftmost bit is the most significant bit unless the sequence is a bit pattern.

5 Conformance

Conforming entities implement:

— both talker and listener;

— listen before talk (LBT) for both talker and listener;

— the capability to execute association on FDC2 and to communicate on (FDC0 and FDC1), (FDC3 and FDC4), or (FDC0, FDC1, FDC3 and FDC4);

— the capability for talkers and listeners to use any of the 8 TDS on an FDC;

— both full duplex and broadcast communication, and pass the tests specified in Annex A.

6 Architecture

The protocol architecture of CCCC follows ISO/IEC 7498-1 as the basic model. CCCC devices communicate through mediators, such as conductive and dielectric materials.

Plate-electrodes for CCCC device E and F are equivalent to the reference plate-electrode assembly.

The plate-electrode A faces to the imaginary point at infinity and the plate-electrode B faces to the mediator. The plate-electrode C faces to the mediator and the plate-electrode D faces to the imaginary point at infinity. See Figure 1.

Figure 2 is the equivalent circuit of Figure 1. The voltage of X is the potential of the point at infinity. The voltage of Y is the potential of the point at infinity. It is deemed that the potential of X and Y is identical. Therefore, X and Y is imaginary short. Consequently, devices E and F are able to send and receive signal.

Regarding the information transfers from CCCC devices E to F, device E changes the voltage between plate-electrode A and B. It changes the electric charge between plate-electrode B and the mediator.

© ISO/IEC 2021 – All rights reserved
AVA Documents Document Sharing Hub
Full document details: BS ISO/IEC 17982:2021

The change in electric charge affects device F by the capacitive coupling between plate-electrode C and mediator. Plate-electrodes A and B and plate-electrodes C and D have potential differences of reverse polarity; therefore, device F senses the information as changes in voltage between plate-electrode C and D.

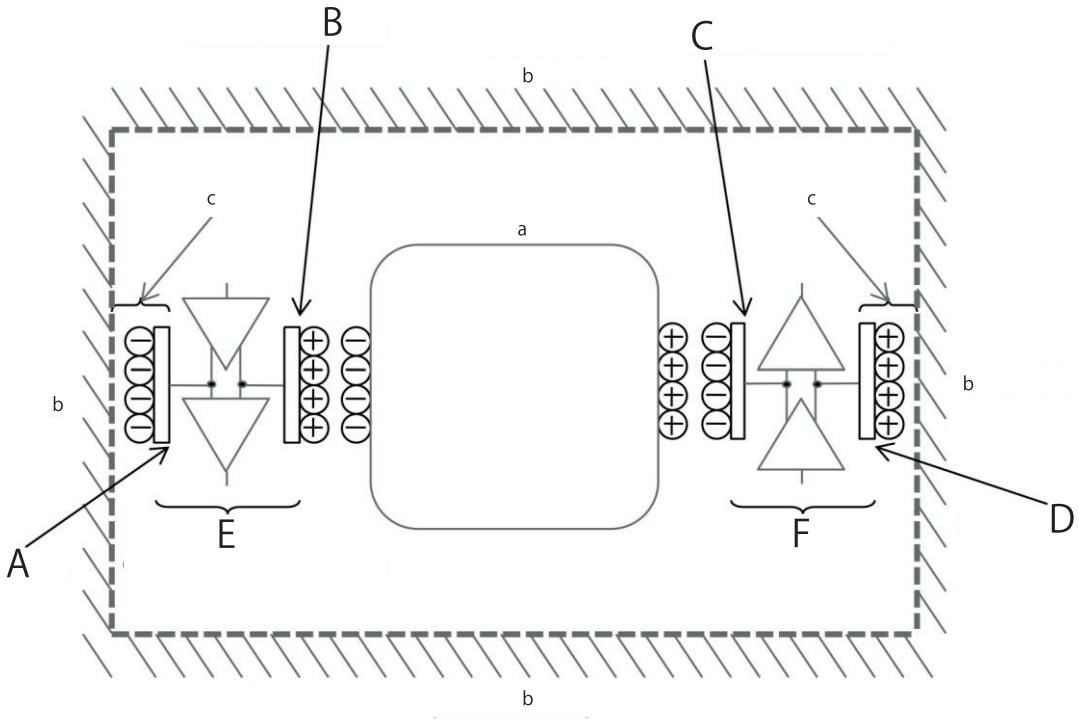

Key

Components

A plate-electrode A

B plate-electrode B

C plate-electrode C

D plate-electrode D

E CCCC device E

F CCCC device F

[a] Mediator, conductive materials or dielectric materials.

[b] Point at infinity.

[c] Electrostatic capacity.

Figure 1 — Electrical models

© ISO/IEC 2021 – All rights reserved

Documents
Document Sharing Hub
Full document details: BS ISO/IEC 17982:2021

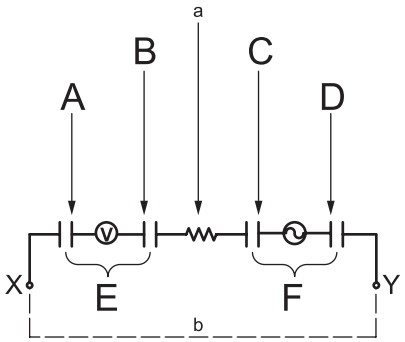

a) Device E is listening and device F is talking

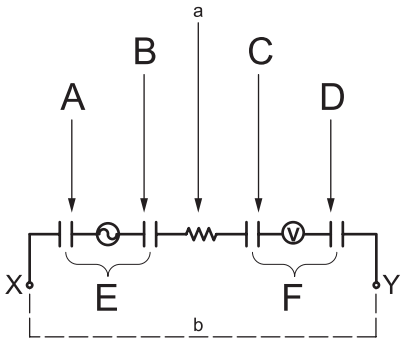

b) Device E is talking and device F is listening

Key

Components

A plate-electrode A

B plate-electrode B

C plate-electrode C

D plate-electrode D

E Closed Capacitive Coupling Communication device E

F Closed Capacitive Coupling Communication device F

a Conductive materials or dielectric materials.

b Imaginary short.

Figure 2 — Equivalent circuit

Information transfer between CCCC devices E and F takes place by synchronous communication, see subclause 13.1. Subclause 8.2.1 specifies five frequency division channels (FDC) by division of the centre frequency. Each FDC consists of a sequence of time-segments. Each time-segment consists of eight time division slots (TDS) for time division multiple-access, see Clause 12. Peers use the listen before talk (LBT) procedure in subclause 13.1 to ascertain that a TDS is not occupied. The TDSs are negotiated using the association procedure specified in Clause 14.

Subclauses 15.1 and 15.2 specify full duplex and broadcast communication respectively. In full duplex communication, talkers and listeners exchange P-PDUs (see Clause 9) by synchronous communication. In broadcast communication, talkers broadcast P-PDUs and listeners receive P-PDUs without acknowledgment.

Length information and CRC is added to the SDU to construct a PHY data unit (P-DU), see Clause 10. The sender segments the P-DU into P-PDUs. The receiving entity reassembles the P-PDUs into the P-DU, see Clause 11, and forwards the SDU to its PHY user as illustrated in Figure 3.

© ISO/IEC 2021 – All rights reserved
Documents
Document Sharing Hub
Full document details: BS ISO/IEC 17982:2021

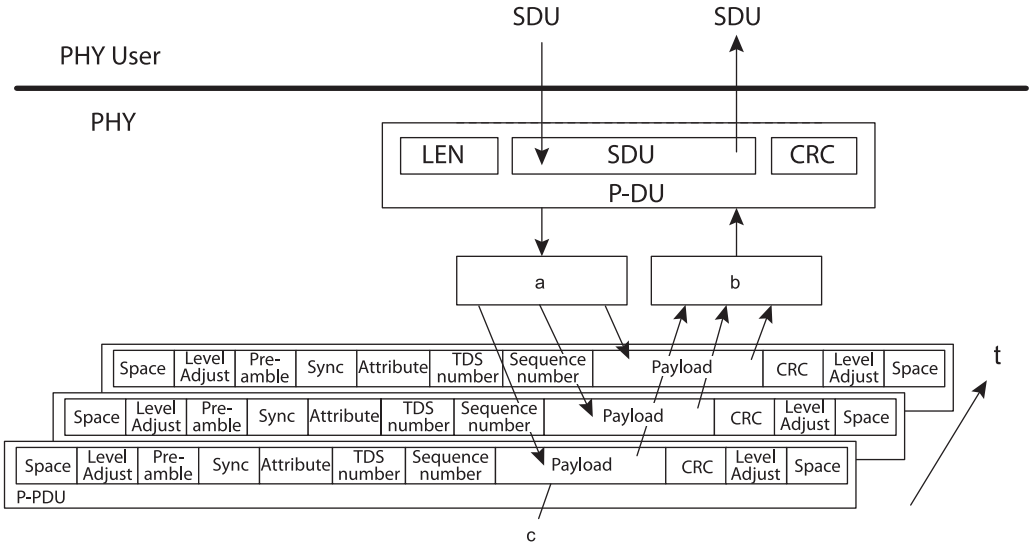

Key

a Segmentation.

b Reassembly.

c Segmented P-PDU.

t time

Figure 3 — PHY model

7 Reference plate-electrode assembly

The reference plate-electrode assembly for the CCCC devices shall consist of plate-electrode A and plate-electrode B as specified in Figure 4. Dimensional characteristics are specified for those parameters deemed to be mandatory.

a = 20,0 ± 0,1 mm

b = 20,0 ± 0,1 mm

The distance c between plate-electrode A and B shall be 5,0 ± 0,1 mm by horizontal flat surface.

d = 0,30 ± 0,03 mm

The displacement of centre of area e between plate-electrode A and B shall be a maximum of 0,1 mm.

The material of the plate-electrodes shall be 99 % to 100 % copper or equivalent.

The twisted-pair wire shall be connected inside the circle area f specified in Figure 4. The circle area f has a diameter of 2,0 ± 0,5 mm. The twisted-pair wire shall be stranded wire and 26, 27, or 28 specified American Wire Gauge. The length of the twisted-pair wire for the reference plate-electrode assembly shall be less than 1,0 m.

© ISO/IEC 2021 – All rights reserved

Documents
Document Sharing Hub
Full document details: BS ISO/IEC 17982:2021

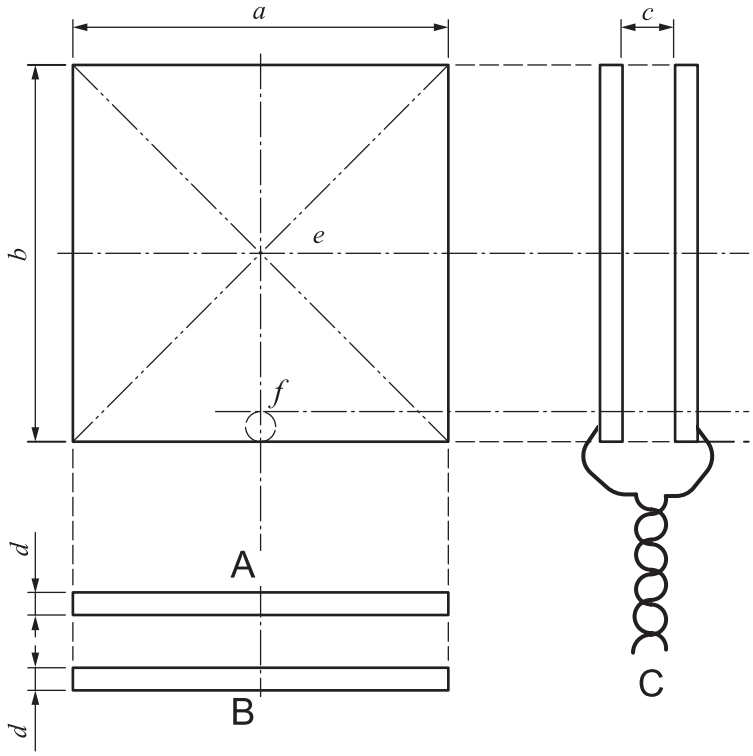

Key

Components

A plate-electrode A

B plate-electrode B

C twist-pair wire

Figure 4 — CCCC reference plate-electrode assembly

8 PHY parameters

8.1 Voltage conditions

The following conditions of the voltage between the outer and the inner plate-electrode shall be used for communication:

— +*m* Volts;

— –*m* Volts;

— 0 Volt;

— OPEN.

The value *m* depends on implementations. 0 Volt is achieved by shorting the two plate-electrodes in a plate-electrode assembly. OPEN is achieved by disconnection of the plate-electrode assembly from the driver circuits.

8.2 Bit representation

8.2.1 Bit duration

The centre frequency f_c is 40,68 MHz ± 50 Hz/MHz.

© ISO/IEC 2021 – All rights reserved
Documents
Document Sharing Hub
Full document details: BS ISO/IEC 17982:2021

The bit duration T equals D/f_c seconds.

Table 1 specifies the relation between FDC and D.

Table 1 — FDC and D

FDC	D
0	11
1	7
2	5
3	3
4	1

8.2.2 Bit encoding

Manchester bit encoding is specified in Figure 5. Depending on the relative orientation, bits are received with either positive or negative polarity. The half bit time transition shall be between 0,4 T and 0,6 T.

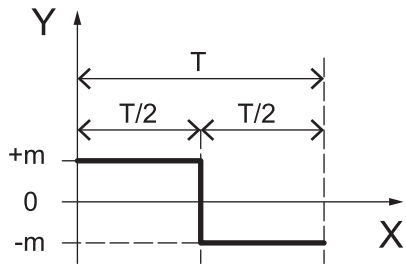

a) bit (1)b encoding

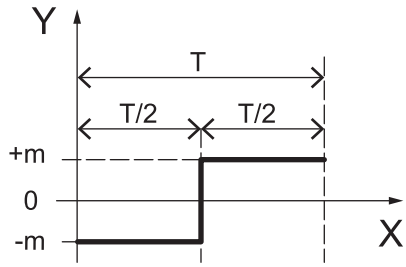

b) bit (0)b encoding

Key

X time

T bit time

Figure 5 — Bit encoding

8.3 Transmission

P-PDUs shall be transmitted byte-wise in the sequence specified in subclause 9.1. Bytes shall be transmitted with the least significant bit first.

8.4 DC balance of a P-PDU

The DC balance of a P-PDU is (Sp - Sn) / (Sp + Sn) x 100 [%] where Sp is the integral of the positive voltage parts of one P-PDU and where Sn is the integral of the negative voltage parts of one P-PDU. The DC balance shall be less than ± 10 % per P-PDU.

© ISO/IEC 2021 – All rights reserved

Documents
Document Sharing Hub
Full document details: BS ISO/IEC 17982:2021

8.5 Reception of a P-PDU

While receiving a P-PDU, receivers shall put the voltage condition to OPEN.

9 P-PDU

9.1 Structure

Figure 6 specifies the P-PDU as a sequence of 0,5 T of space, 1,5 T of level adjust, 2 T of pre-amble, 5 T of sync, 2 T of attribute, 3 T of TDS number, 2 T of sequence number, 32 T of payload, 16 T of CRC, and 2 T of post-amble. The P-PDU continues/ends with 1,5T of level adjust and another 0,5T space. The bit encoding specified in 8.2.2 shall be applied to attribute, TDS number, sequence number, payload, and CRC.

66 T is represented by t_1, t_2, t_3, … t_{66}.

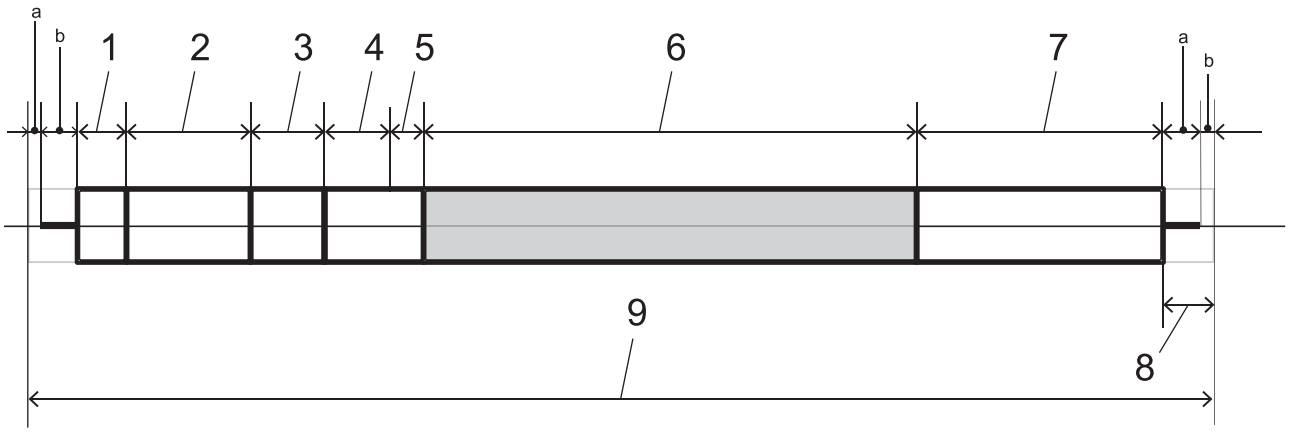

Key

1 pre-amble (2 T)
2 sync (5 T)
3 attribute (2 T)
4 TDS number (3 T)
5 sequence number (2 T)
6 payload (32 T)
7 CRC (16 T)
8 postamble (2 T)
9 P-PDU (66 T)
a Space (0,5 T).
b Level adjust (1,5 T).

Figure 6 — P-PDU structure

9.2 Space

The space duration shall be 0,5 T with voltage condition OPEN.

9.3 Level adjust

Level adjust shall be 1,5 T of 0 Volt.

© ISO/IEC 2021 – All rights reserved
Documents
Document Sharing Hub
Full document details: BS ISO/IEC 17982:2021

9.4 Pre-amble and Sync

Figure 7 specifies pre-amble and sync patterns. The transmitter shall apply pattern P. If the receiver detects sync pattern P then it shall decode the bits in a P-PDU as positive polarity. If the receiver detects sync pattern Q then it shall decode the bits in a P-PDU as negative polarity. The divisor value shall be detected from pre-amble and sync. Other patterns shall not be handled as pre-amble and sync.

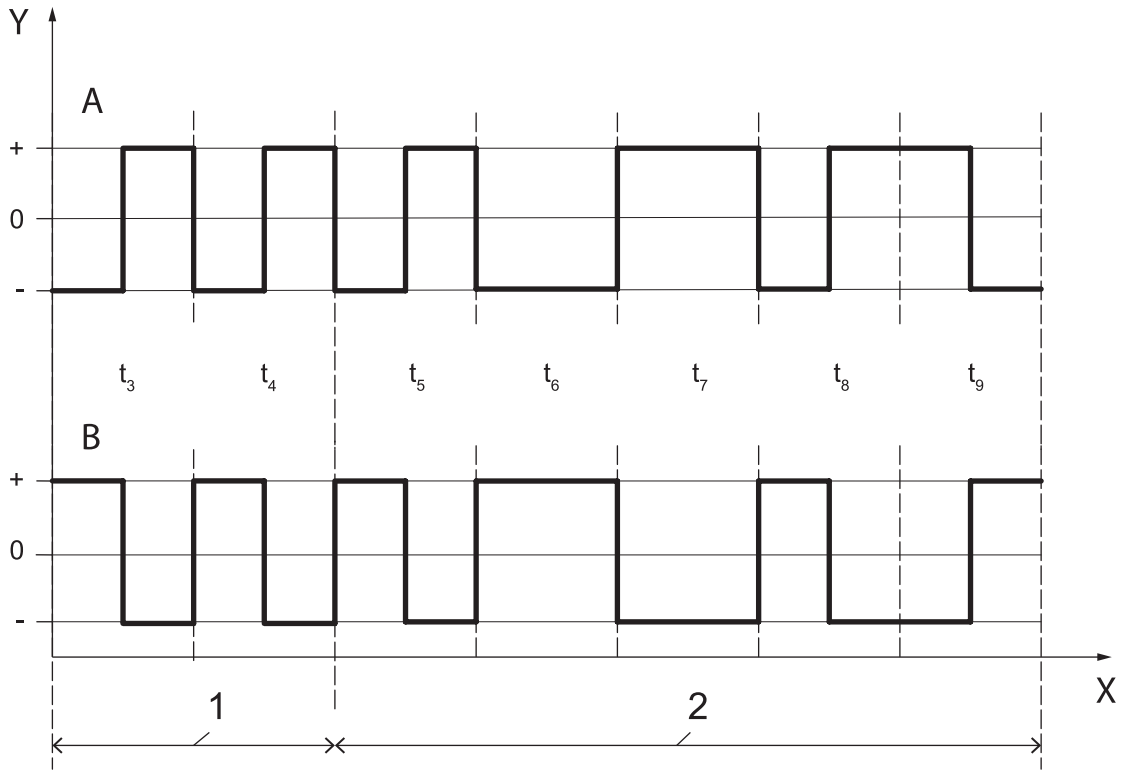

Key

1 pre-amble (2 T)

2 sync (5 T)

X time

T bit time

Figure 7 — Pre-amble and sync patterns

9.5 Attribute

Table 2 specifies the bit encodings of the attribute settings in a P-PDU. If a receiver gets RFU attribute settings it shall ignore the P-PDU and stay mute.

Table 2 — Attribute settings

t_{10}	t_{11}	Definition	
		FDC2	FDC0, FDC1, FDC3, and FDC4
0	0	Association request 1 or Association response 2	null P-PDU
0	1	Association response 1 or Association request 2	last data P-PDU
1	0	RFU	first data P-PDU
1	1	RFU	data P-PDU between the first and the last data P-PDU

© ISO/IEC 2021 – All rights reserved

Documents
Document Sharing Hub
Full document details: BS ISO/IEC 17982:2021

9.6 TDS number

The TDS number field shall indicate the slot number in which the P-PDU is send; numbers 1 to 8 are identified by (000)b to (111)b.

9.7 Sequence number

9.7.1 Initial and range

P-PDUs shall be identified by the sequence numbers in the range of (00)b to (11)b. The first P-PDU shall have (00)b in the sequence number field.

9.7.2 Acknowledgement

To acknowledge correct reception, receivers shall increment the sequence number by 1 (modulo 4) from the correctly received P-PDU as the sequence number in the next P-PDU.

9.8 Payload

The payload field of a P-PDU contains 4 bytes.

9.9 CRC

The scope of CRC shall be the last 1 T of sync as a bit, attribute, TDS number, sequence number, and payload. The CRC shall be calculated according to ITU-T V.41 with pre-set value (FF FF). If the CRC of the received P-PDU and the calculated CRC upon reception differ, the P-DU shall be ignored.

Example with attribute (11)b, TDS number (010)b, sequence number (10)b, payload (55 AA 00 FF) the CRC is (6F AB).

9.10 Post-amble

Post-ambles consist of 1,5 T of level adjust and 0,5 T of Space.

9.11 Null P-PDU

Null P-PDUs have attribute of (00)b and a payload (00 00 00 00).

9.12 Data P-PDU

Data P-PDUs have a payload with a (possibly segmented) P-DU.

10 PHY data unit (P-DU)

Figure 8 specifies the P-DU. It shall consist of LEN, SDU, and CRC.

© ISO/IEC 2021 – All rights reserved
Documents
Document Sharing Hub
Full document details: BS ISO/IEC 17982:2021

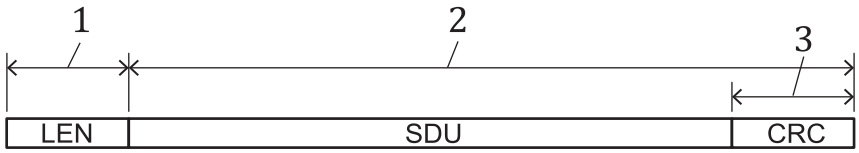

Key

1 2 byte

2 LEN bytes

3 16 bit

Figure 8 — PHY data unit (P-DU)

LEN contains the length of SDU in bytes + 2. The CRC shall be calculated over the LEN value and the SDU according to ITU-T V.41. The pre-set value shall be (FFFF).

11 Segmentation and reassembly

P-DU shall be segmented and reassembled into 4 byte payloads of P-PDU as illustrated in Figure 9, by using the attribute settings in Table 2.

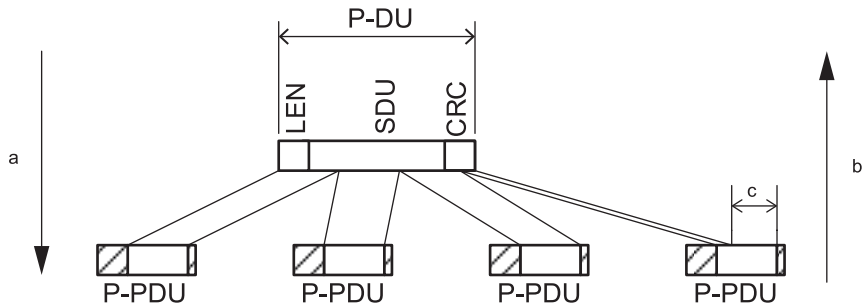

a Segmentation.

b Reassembly.

c Duration to be ignored for information exchange.

Figure 9 — Segmentation and reassembly

12 TDS

A TDS is 64 T wide. A P-PDU which is 66 T wide (see Figure 6), shall be transmitted in one TDS. See Figure 11.

TDSs shall be numbered from 1 to 8 in each time segment as illustrated in Figure 10.

© ISO/IEC 2021 – All rights reserved

Documents
Document Sharing Hub
Full document details: BS ISO/IEC 17982:2021

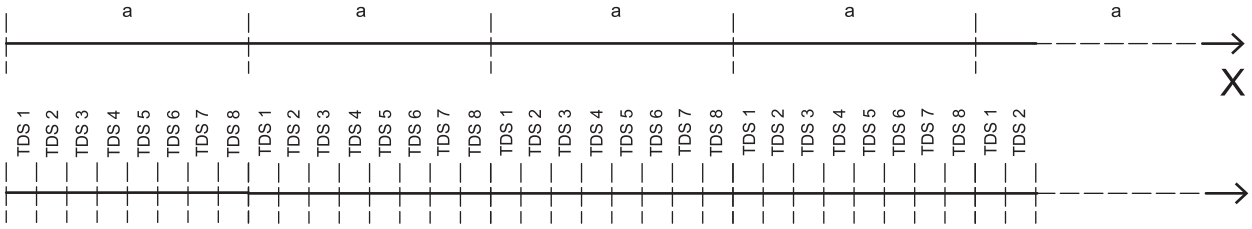

a Time-segment.

Figure 10 — Time-segment and TDS

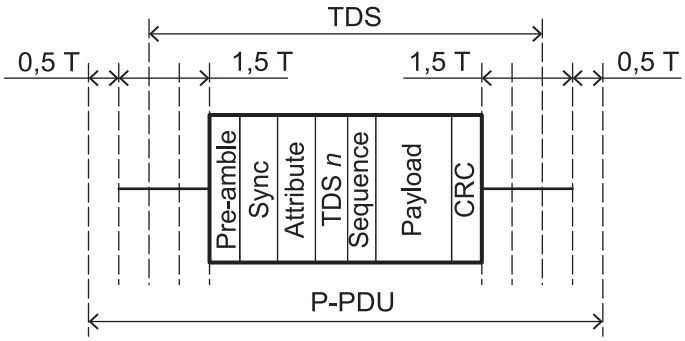

Figure 11 — Mapping of a P-PDU and a TDS

This document specifies full duplex and broadcast communication. A TDS is used for unidirectional communication. A full duplex channel consists of two TDSs and one TDS is used for broadcast communication.

The TDS may be either fixed by configuration or be negotiated.

Talkers may either use fixed configured TDS(s) on FDC1 or FDC3 or alternatively negotiate using TDS(s) on FDC1 or FDC3 using the association procedure. Talkers that select FDC0 or FDC4 shall negotiate TDS using the association procedure in Clause 14.

Before using a TDS, entities shall use LBT and synchronisation.

13 LBT and synchronisation

13.1 LBT

During LBT, entities shall listen for 576 T on the selected FDC to seek a free TDS. A TDS is occupied when the entities receive a correct P-PDU.

13.2 Synchronisation

If all TDSs on the FDC that the talker selects are found to be free using LBT, then that talker shall generate the TDS timing on its selected FDC. Otherwise the talkers shall synchronise to the TDS timing on the FDC using LBT. Listeners shall always synchronise to the TDS timing on the FDC using LBT.

© ISO/IEC 2021 – All rights reserved
Documents
Document Sharing Hub
Full document details: BS ISO/IEC 17982:2021

14 Association procedure

Talkers use the association procedure to negotiate the communication TDS(s). During this procedure, talkers and listeners exchange the P-PDUs on 2 full duplex TDS in FDC2, in the following steps:

1) Talker selects a free association TDS in the range from 0 to 3 in FDC2, using LBT.

2) Talker selects (1 for broadcast and 2 for full duplex) free slot(s) in an FDC other than FDC2, using LBT.

3) Talker sends association request 1 P-PDU specified in Table 3 on the association TDS from step 1 with attribute (00)b, sequence number (00)b and FDC/TDS(s) from step 2 and the selected communication mode.

4) Listener sends association response 1 P-PDU specified in Table 4 on the association TDS number + 4 with attribute (01)b, sequence number (01)b and random number.

5) Talker sends association request 2 P-PDU specified in Table 4 on the association TDS from step 1 with attribute (01)b, sequence number (10)b and the random number from association response 1.

6) Listener sends association response 2 P-PDU specified in Table 3 on the association TDS number + 4 with attribute (00)b, sequence number (11)b and FDC/TDS(s) from association request 1.

7) Peers attempt communication as specified in Clause 15 on the FDC/TDS(s) from association request 1.

8) If the FDC/TDS(s) from association request 1 are occupied peers may repeat this association procedure.

Figure 12 illustrates steps 3) to 6).

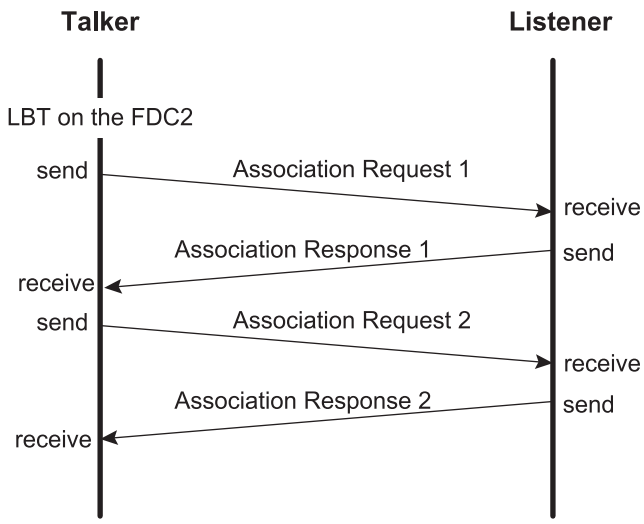

Figure 12 — Association

© ISO/IEC 2021 – All rights reserved

Documents
Document Sharing Hub
Full document details: BS ISO/IEC 17982:2021

Table 3 — Payload with parameters of association request 1 and association response 2 P-PDU

Payload	Settings															
t_{48}	Shall be one's complement of t_{17}, t_{18}, t_{19}, t_{20}, t_{21}, t_{22}, t_{23}, t_{24}, t_{25}, t_{26}, t_{27}, t_{28}, t_{29}, t_{30}, t_{31}, t_{32}															
t_{47}																
. . .																
t_{34}																
t_{33}																
t_{32}	RFU															
t_{31}	RFU															
t_{30}	RFU															
t_{29}	RFU															
t_{28}	RFU															
t_{27}	0	full duplex			0	broadcast			other settings are RFU							
t_{26}	0	communication			1	communication										
t_{25}	0				0											
t_{24}	0	listener	1	listener	0	listener	1	listener	0	listener	1	listener	0	listener	1	listen-er
t_{23}	0	uses	0	uses	1	uses	1	uses	0	Uses	0	uses	1	uses	1	uses
t_{22}	0	TDS 1	0	TDS 2	0	TDS 3	0	TDS 4	1	TDS 5	1	TDS 6	1	TDS 7	1	TDS 8
t_{21}	0	talker	1	talker	0	talker	1	talker	0	talker	1	talker	0	talker	1	talker
t_{20}	0	uses	0	uses	1	uses	1	uses	0	Uses	0	uses	1	uses	1	uses
t_{19}	0	TDS 1	0	TDS 2	0	TDS 3	0	TDS 4	1	TDS 5	1	TDS 6	1	TDS 7	1	TDS 8
t_{18}	0	use FDC 0			1	use FDC 4					other settings are RFU					
t_{17}	0				1											

© ISO/IEC 2021 – All rights reserved
Documents
Document Sharing Hub
Full document details: BS ISO/IEC 17982:2021