BS ISO/IEC 18000-63:2013

Incorporating corrigendum April 2013

BSI Standards Publication

Information technology — Radio frequency identification for item management

Part 63: Parameters for air interface communications at 860 MHz to 960 MHz Type C

bsi.

...making excellence a habit.™

Document Sharing Hub

Full document details: BS ISO/IEC 18000-63:2013

National foreword

This British Standard is the UK implementation of ISO/IEC 18000-63:2013. Together with BS ISO/IEC 18000-6:2013, BS ISO/IEC 18000-61:2012, BS ISO/IEC 18000-62:2012, and BS ISO/IEC 18000-64:2012, it supersedes BS ISO/IEC 18000-6:2010, which is withdrawn.

The UK participation in its preparation was entrusted to Technical Committee IST/34, Automatic identification and data capture techniques.

A list of organizations represented on this committee can be obtained on request to its secretary.

This publication does not purport to include all the necessary provisions of a contract. Users are responsible for its correct application.

The British Standards Institution 2013.
Published by BSI Standards Limited 2013

ISBN 978 0 580 82604 7

ICS 35.040

Compliance with a British Standard cannot confer immunity from legal obligations.

This British Standard was published under the authority of the Standards Policy and Strategy Committee on 28 February 2013.

Amendments/corrigenda issued since publication

Date	Text affected
30 April 2013	Missing pages inserted

Documents
Document Sharing Hub

Full document details: BS ISO/IEC 18000-63:2013

INTERNATIONAL STANDARD

ISO/IEC 18000-63

First edition
2013-01-15

Information technology — Radio frequency identification for item management —

Part 63: Parameters for air interface communications at 860 MHz to 960 MHz Type C

Technologies de l'information — Identification par radiofréquence (RFID) pour la gestion d'objets —

Partie 63: Paramètres de communications d'une interface radio entre 860 MHz et 960 MHz, Type C

Reference number
ISO/IEC 18000-63:2013(E)

Documents
Document Sharing Hub

© ISO/IEC 2013

Full document details: BS ISO/IEC 18000-63:2013

COPYRIGHT PROTECTED DOCUMENT

© ISO/IEC 2013

All rights reserved. Unless otherwise specified, no part of this publication may be reproduced or utilized in any form or by any means, electronic or mechanical, including photocopying and microfilm, without permission in writing from either ISO at the address below or ISO's member body in the country of the requester.

ISO copyright office
Case postale 56 • CH-1211 Geneva 20
Tel. + 41 22 749 01 11
Fax + 41 22 749 09 47
E-mail copyright@iso.org
Web www.iso.org

Published in Switzerland

© ISO/IEC 2013 – All rights reserved

Documents
Document Sharing Hub

Full document details: BS ISO/IEC 18000-63:2013

Contents

Page

Foreword ix
Introduction x
1 Scope 1
2 Conformance 1
2.1 Interrogator conformance and obligations 2
2.2 Tag conformance and obligations 2
3 Normative references 3
4 Terms and definitions, symbols and abbreviated terms 3
4.1 Terms and definitions 3
5 Symbols, abbreviated terms and notations 5
5.1 Symbols 5
5.2 Abbreviated terms 6
5.3 Notation 8
6 Type C 9
6.1 Parameter tables 9
6.2 Protocol overview 14
6.2.1 Physical layer 14
6.2.2 Tag-identification layer 14
6.3 Command types and command structure 14
6.3.1 General 14
6.3.2 Mandatory 15
6.3.3 Optional 15
6.3.4 Custom 15
6.3.5 Proprietary 15
6.4 Description of operating procedure 15
6.4.1 Signalling 15
6.4.2 Tag selection, inventory, and access 30
7 Battery Assisted Passive (BAP) Interrogator Talks First Type C systems (optional) 78
7.1 Applicability 78
7.2 General overview, definitions, and requirements of BAP 78
7.3 Battery Assisted Passive inventoried flag and state machine behaviour modifications 80
7.3.1 Modification to ready state and power-down support for BAP Tags 80
7.3.2 Signal loss tolerance via timer (mandatory) 81
7.3.3 Modified persistence of BAP PIE inventory flags (optional) 83
7.4 Battery Assisted Passive PIE (optional) 85
7.4.1 *Flex_Query* command (optional) 85
7.4.2 BAP PIE detailed operation including optional Battery Saver Mode 86
7.5 Manchester mode Battery Assisted operation protocol extensions 92
7.5.1 Introduction 92
7.5.2 Physical layer 93
7.5.3 Manchester Activation 98
7.5.4 Commands summary 114
7.6 Extended Protocol Control and Battery Tag Capabilities Reporting and Setting 128
7.6.1 General 128
7.6.2 Extended Protocol Control definition 129
7.6.3 Battery Assisted Passive Tag Capability Reporting, Setting, and duty cycle/mode control (optional) 131
8 Sensor support 159

Documents
Document Sharing Hub

© ISO/IEC 2013 – All rights reserved

Full document details: BS ISO/IEC 18000-63:2013

8.1 Applicability ... 159
8.2 Overview ... 159
8.3 Real Time Clock (RTC) ... 160
8.3.1 General ... 160
8.3.2 Setting the RTC ... 160
8.3.3 *BroadcastSync* command (optional, for Type C) ... 161
8.3.4 Time synchronisation ... 162
8.4 *HandleSensor* command (optional, for Type C) ... 163
8.5 Simple Sensor ... 164
8.5.1 Type C and Simple Sensor ... 164
8.6 Sensor Directory System and Full Function Sensors ... 166
8.6.1 Sensor Access – General Approach ... 166

Annex A (normative) Extensible bit vectors (EBV) ... 173

Annex B (normative) State-transition tables ... 174
B.1 Contents ... 174
B.2 State transition tables for passive ... 174
B.2.1 Present state: Ready ... 174
B.2.2 Present state: Arbitrate ... 175
B.2.3 Present state: Reply ... 176
B.2.4 Present state: Acknowledged ... 177
B.2.5 Present state: Open ... 178
B.2.6 Present state: Secured ... 179
B.2.7 Present state: Killed ... 180
B.3 State transition tables for BAP PIE ... 181
B.3.1 Present state: sleep ... 181
B.3.2 Present state: low power listen ... 181
B.3.3 Present state: listen or stateful listen ... 181
B.3.4 Present state: stateful sleep or stateful low power listen ... 181
B.3.5 Present state: battery ready ... 182
B.3.6 Present state: Arbitrate ... 182
B.3.7 Present state: Reply ... 183
B.3.8 Present state: Acknowledged ... 184
B.3.9 Present state: Open ... 185
B.3.10 Present state: Secured ... 187
B.3.11 Present state: Killed ... 189
B.4 State transition tables for BAP Manchester ... 189
B.4.1 Present state: Hibernate ... 189
B.4.2 Present state: Activation code check ... 190
B.4.3 Present state: Stateful Hibernate ... 190
B.4.4 Present state: Battery Ready ... 191
B.4.5 Present state: Arbitrate ... 193
B.4.6 Present state: Reply ... 195
B.4.7 Present state: Acknowledged ... 197
B.4.8 Present state: Open ... 199
B.4.9 Present state: Secured ... 201
B.4.10 Present state: Killed ... 204

Annex C (normative) Command-response tables ... 205
C.1 Contents ... 205
C.2 Command response tables for passive ... 205
C.2.1 Command response: Power-up ... 205
C.2.2 Command response: *Query* ... 205
C.2.3 Command response: *QueryRep* ... 206
C.2.4 Command response: *QueryAdjust* ... 206
C.2.5 Command response: *ACK* ... 207
C.2.6 Command response: *NAK* ... 207
C.2.7 Command response: *Req_RN* ... 207
C.2.8 Command response: *Select* ... 208
C.2.9 Command response: *Read* ... 208

Documents
Document Sharing Hub

© ISO/IEC 2013 – All rights reserved

Full document details: BS ISO/IEC 18000-63:2013

C.2.10 Command response: *Write* ... 208
C.2.11 Command response: *Kill* ... 209
C.2.12 Command response: *Lock* ... 209
C.2.13 Command response: *Access* ... 210
C.2.14 Command response: *BlockWrite* ... 210
C.2.15 Command response: *BlockErase* ... 211
C.2.16 Command response: *BlockPermalock* ... 211
C.2.17 Command response: T_2 timeout ... 212
C.2.18 Command response: Invalid command ... 212
C.3 Command response tables for BAP PIE ... 213
C.3.1 Command response: Flex_Query (optional for BAP PIE) ... 213
C.3.2 Command response: INACT_T or Selective Global Timeout ... 213
C.3.3 Command response: Global Timeout ... 214
C.3.4 Command response: *HandleSensor* ... 214
C.3.5 Command response: *BroadcastSync* ... 214
C.4 Command Response Tables for Manchester ... 215
C.4.1 Command response: Power-up ... 215
C.4.2 Command response: *QueryRep* ... 215
C.4.3 Command response: *QueryAdjust* ... 215
C.4.4 Command response: *ACK* ... 216
C.4.5 Command response: *NAK* ... 217
C.4.6 Command response: *Req_RN* ... 217
C.4.7 Command response: *Select* ... 217
C.4.8 Command response: *Read* ... 217
C.4.9 Command response: *Write* ... 217
C.4.10 Command response: *Kill* ... 217
C.4.11 Command response: *Lock* ... 217
C.4.12 Command response: *Access* ... 218
C.4.13 Command response: *BlockWrite* ... 218
C.4.14 Command response: *BlockErase* ... 218
C.4.15 Command response: *BlockPermalock* ... 218
C.4.16 Command response: T_2 timeout ... 218
C.4.17 Command response: *Long Activation* ... 218
C.4.18 Command response: *Short Activation* ... 219
C.4.19 Command response: *Query_BAT* ... 220
C.4.20 Command response: *Next* ... 221
C.4.21 Command response: *Deactivate_BAT* ... 221
C.4.22 Command response: *Broadcast ID* ... 222
C.4.23 Command response: *Multirate_Reset* ... 223
C.4.24 Command response: *HandleSensor* ... 223
C.4.25 Command response: *BroadcastSync* ... 223
C.4.26 Command response: Session Flag timer timeout ... 224
C.4.27 Command response: INACT_T or Selective Global Timeout ... 224
C.4.28 Command response: Global Timeout ... 224
C.4.29 Command response: T_A ... 225
C.4.30 Command response: OpRegister Read/Write ... 225
C.4.31 Command response: Invalid command ... 226

Annex D (informative) **Example slot-count *(Q)* selection algorithm** ... 227
D.1 Example algorithm an Interrogator might use to choose *Q* ... 227

Annex E (informative) **Example of Tag inventory and access** ... 228
E.1 Example inventory and access of a single Tag ... 228

Annex F (informative) **Calculation of 5-bit and 16-bit cyclic redundancy checks** ... 232
F.1 Example CRC-5 encoder/decoder ... 232
F.2 Example CRC-16 encoder/decoder ... 232
F.3 Example CRC-16 calculations ... 233

Annex G (normative) **Dense- and Multiple-Interrogator channelised signalling** ... 234
G.1 General ... 234
G.2 Overview of Dense-Interrogator channelised signalling (informative) ... 234

Documents
Document Sharing Hub

© ISO/IEC 2013 – All rights reserved

Full document details: BS ISO/IEC 18000-63:2013

Annex H (informative) **Interrogator-to-Tag link modulation** ... 237
H.1 Baseband waveforms, modulated RF, and detected waveforms ... 237

Annex I (normative) **Error codes** ... 239
I.1 Tag error codes and their usage ... 239

Annex J (normative) **Slot counter** ... 241
J.1 Slot-counter operation ... 241

Annex K (informative) **Example data-flow exchange** ... 242
K.1 Overview of the data-flow exchange ... 242
K.2 Tag memory contents and lock-field values ... 242
K.3 Data-flow exchange and command sequence ... 243

Annex L (informative) **Optional Tag features** ... 244
L.1 General ... 244
L.2 Optional Tag passwords ... 244
L.2.1 Kill password ... 244
L.2.2 Access password ... 244
L.3 Optional Tag memory banks and memory-bank sizes ... 244
L.3.1 Reserved memory ... 244
L.3.2 UII memory ... 244
L.3.3 TID memory ... 244
L.3.4 User memory ... 244
L.4 Optional Tag commands ... 245
L.5 Optional Tag error-code reporting format ... 245
L.6 Optional Tag backscatter modulation format ... 245
L.7 Optional Tag functionality ... 245

Annex M (informative) **Battery Assisted Tag to Interrogator synchronization** ... 246
M.1 Introduction ... 246
M.2 General concept ... 246
M.3 Tag to Interrogator synchronization ... 247

Annex N (normative) **Simple Sensors Data Block** ... 249
N.1 Simple sensor types ... 249
N.2 General bit-based rules ... 250
N.3 Temperature sensor with 14° C span ... 250
N.3.1 Monitored measurement span ... 250
N.3.2 Accuracy ... 251
N.3.3 Sampling regime ... 251
N.3.4 High in-range limit level ... 251
N.3.5 Low in-range limit level ... 252
N.3.6 Monitor delay ... 252
N.3.7 High out-of-range alarm delay ... 253
N.3.8 Low out-of-range alarm delay ... 253
N.3.9 Alarms ... 254
N.4 Temperature sensor with 28° C span ... 255
N.4.1 Monitored measurement span ... 255
N.4.2 Accuracy ... 255
N.4.3 Sampling regime ... 255
N.4.4 High in-range limit ... 255
N.4.5 Low in-range limit ... 255
N.4.6 Monitor delay ... 256
N.4.7 High out-of-range alarm delay ... 256
N.4.8 Low out-of-range alarm delay ... 256
N.4.9 Alarms ... 256
N.5 Relative humidity ... 256
N.5.1 Monitored measurement span ... 256
N.5.2 Accuracy ... 256
N.5.3 Sampling regime ... 257
N.5.4 High in-range limit level ... 257
N.5.5 Low in-range limit level ... 257

Documents
Document Sharing Hub

© ISO/IEC 2013 – All rights reserved

Full document details: BS ISO/IEC 18000-63:2013

N.5.6 Monitor delay 257
N.5.7 High out-of-range alarm delay 257
N.5.8 Low out-of-range alarm delay 257
N.5.9 Alarms....257
N.6 Impact 258
N.6.1 Monitored measurement span 258
N.6.2 Accuracy 258
N.6.3 Sampling regime....258
N.6.4 High in-range limit 258
N.6.5 Low in-range limit....258
N.6.6 Monitor delay 258
N.6.7 High out-of-range alarm delay 258
N.6.8 Low out-of-range alarm delay 259
N.6.9 Alarms....259
N.7 Tilt 259
N.7.1 Monitored measurement span 259
N.7.2 Accuracy 259
N.7.3 Sampling regime....259
N.7.4 High in-range limit 259
N.7.5 Low in-range limit....259
N.7.6 Monitor delay 259
N.7.7 High out-of-range alarm delay 260
N.7.8 Low out-of-range alarm delay 260
N.7.9 Alarms....260

Annex O (normative) Record structures and commands for Ported Simple Sensors 261
O.1 Record structure types 261
O.1.1 Simple sensor data block 261
O.1.2 Sensor characteristics record block 262
O.1.3 Manufacturer record block 262
O.1.4 Authorisation password record block....263
O.1.5 Calibration record block 263
O.1.6 Sample and configuration record block....265
O.1.7 Event record block 266
O.1.8 Time synchronisation record block....267
O.2 Ported Simple Sensor commands 267
O.2.1 Read-Simple-Sensor-Data-Block 267
O.2.2 Read-Manufacturer-Record 268
O.2.3 Write-Password 268
O.2.4 Read-Calibration-Record 269
O.2.5 Write-Sample-And-Configuration-Record....269
O.2.6 Initialise-Sensor-Monitoring....270
O.2.7 Read-Sample-And-Configuration-Record 271
O.2.8 Read-Event-Record 271
O.2.9 Write-UTC-Timestamp....272
O.2.10 Read-Time-Synchronisation-Record 273
O.2.11 Erase-Monitored-Data 274
O.2.12 Activate-Simple-Sensor 274
O.2.13 Deactivate-Simple-Sensor 275

Annex P (informative) BAP PIE and Manchester mode tutorial guide....276
P.1 Executive summary of Battery Assisted Passive RFID in this standard....276
P.2 Battery Assisted Passive fundamentals 278
P.2.1 Propagation physics and resulting relationship between Interrogator and Tag sensitivity 278
P.2.2 Tag receiver issues 280
P.3 BAP PIE 281
P.4 Manchester....281
P.5 Guidance on using Next vs. Deactivate_BAT (PIE and Manchester)....282
P.6 Reliable inventory status tracking....282
P.7 Environmental validation....283
P.7.1 INACT_T and (Selective) Global Timeout timer refresh 283

Documents
Document Sharing Hub

© ISO/IEC 2013 – All rights reserved

Full document details: BS ISO/IEC 18000-63:2013

P.8 Fade delay tolerance via INACT_T and Global Timeout 284
P.9 Clocks and commanded data rates and BLFs 284
P.10 Tag Capabilities Reporting and Setting (TCRS) 285
P.11 BAP PIE persistence compliance 285

Annex Q (informative) **Manchester mode RF power control** 286
Q.1 General 286
Q.2 Power levelling description 286
Q.3 Power leveling algorithm 288

Bibliography 291

© ISO/IEC 2013 – All rights reserved

Documents
Document Sharing Hub
Full document details: BS ISO/IEC 18000-63:2013

Foreword

ISO (the International Organization for Standardization) and IEC (the International Electrotechnical Commission) form the specialized system for worldwide standardization. National bodies that are members of ISO or IEC participate in the development of International Standards through technical committees established by the respective organization to deal with particular fields of technical activity. ISO and IEC technical committees collaborate in fields of mutual interest. Other international organizations, governmental and non-governmental, in liaison with ISO and IEC, also take part in the work. In the field of information technology, ISO and IEC have established a joint technical committee, ISO/IEC JTC 1.

International Standards are drafted in accordance with the rules given in the ISO/IEC Directives, Part 2.

The main task of the joint technical committee is to prepare International Standards. Draft International Standards adopted by the joint technical committee are circulated to national bodies for voting. Publication as an International Standard requires approval by at least 75 % of the national bodies casting a vote.

ISO/IEC 18000-63 was prepared by Joint Technical Committee ISO/IEC JTC 1, *Information technology*, Subcommittee SC 31, *Automatic identification and data capture techniques*.

ISO/IEC 18000 consists of the following parts, under the general title *Information technology — Radio frequency identification for item management*:

— *Part 1: Reference architecture and definition of parameters to be standardized*

— *Part 2: Parameters for air interface communications below 135 kHz*

— *Part 3: Parameters for air interface communications at 13,56 MHz*

— *Part 4: Parameters for air interface communications at 2,45 GHz*

— *Part 6: Parameters for air interface communications at 860 MHz to 960 MHz General*

— *Part 61: Parameters for air interface communications at 860 MHz to 960 MHz Type A*

— *Part 62: Parameters for air interface communications at 860 MHz to 960 MHz Type B*

— *Part 63: Parameters for air interface communications at 860 MHz to 960 MHz Type C*

— *Part 64: Parameters for air interface communications at 860 MHz to 960 MHz Type D*

— *Part 7: Parameters for active air interface communications at 433 MHz*

© ISO/IEC 2013 – All rights reserved

Documents
Document Sharing Hub
Full document details: BS ISO/IEC 18000-63:2013

Introduction

This part of ISO/IEC 18000 describes a passive backscatter radio frequency identification (RFID) system that supports the following system capabilities:

- identification and communication with multiple tags in the field;
- selection of a subgroup of tags for identification or with which to communicate;
- reading from and writing to or rewriting data many times to individual tags;
- user-controlled permanently lockable memory;
- data integrity protection;
- Interrogator-to-tag communications link with error detection;
- tag-to-Interrogator communications link with error detection;
- support for both passive back-scatter tags with or without batteries.

This part of ISO/IEC 18000 specifies the physical and logical requirements for a passive-backscatter, RFID system operating in the 860 MHz to 960 MHz frequency range. The system comprises Interrogators, also known as readers, and tags, also known as labels.

An Interrogator transmits information to a tag by modulating an RF signal in the 860 MHz to 960 MHz frequency range. The tag receives both information and operating energy from this RF signal. Passive tags are those which receive all of their operating energy from the Interrogator's RF waveform. If tags maintain a battery then they may operate using some passive principles; however, they do not necessarily get all their operating energy from the Interrogator's RF waveform.

An Interrogator receives information from a tag by transmitting a continuous-wave (CW) RF signal to the tag; the tag responds by modulating the reflection coefficient of its antenna, thereby backscattering an information signal to the Interrogator. The system is Interrogator-Talks-First (ITF), meaning that a tag modulates its antenna reflection coefficient with an information signal only after being directed to do so by an Interrogator.

Interrogators and tags are not required to talk simultaneously; rather, communications are half-duplex, meaning that Interrogators talk and tags listen, or vice versa.

The International Organization for Standardization (ISO) and International Electrotechnical Commission (IEC) draw attention to the fact that it is claimed that compliance with this document may involve the use of patents concerning radio frequency identification technology.

ISO and IEC take no position concerning the evidence, validity and scope of these patent rights.

The holders of these patent rights have assured ISO and IEC that they are willing to negotiate licences under reasonable and non-discriminatory terms and conditions with applicants throughout the world. In this respect, the statements of the holders of these patent rights are registered with ISO and IEC.

© ISO/IEC 2013 – All rights reserved
Documents
Document Sharing Hub
Full document details: BS ISO/IEC 18000-63:2013

Information on the declared patents may be obtained from:

Contact details	
Patent Holder:	
Legal Name	Atmel Automotive GmbH
Contact for license application:	
Name & Department	Leo Merken, Legal Department, ATMEL Corporation
Address	2325 Orchard Parkway
Address	San Jose, CA 95131 USA
Tel.	+1 408 436 4251
Fax	+1 408 487 2615
E-mail	leo.merken@atmel.com
URL (optional)	
Patent Holder:	
Legal Name	CISC Semiconductor Design+Consulting GmbH
Contact for license application:	
Name & Department	Markus Pistauer, CEO
Address	Lakeside B07
Address	9020 Klagenfurt, Austria
Tel.	+43(463) 508 808
Fax	+43(463) 508 808-18
E-mail	m.pistauer@cisc.at
URL (optional)	www.cisc.at

© ISO/IEC 2013 – All rights reserved

Documents
Document Sharing Hub
Full document details: BS ISO/IEC 18000-63:2013

Patent holder:	
ETRI (Electronics Telecommunication Reseach Institute)	
Contact for license application:	
Name & Department:	Min-Sheo Choi, Intellectual Property Management Team
Address:	138 Gajeongno, Yuseong-gu
Address:	Daejeon, 305-700, Korea
Tel.	+82-42-860-0756
Fax	+82-42-860-3831
E-mail	choims@etri.re.kr
URL (optional)	www.etri.re.kr
Patent Holder:	
Legal Name	Impinj, Inc.
Contact for license application:	
Name & Department	Chris Diorio, CTO
Address	701 N. 34th Street, Suite 300
Address	Seattle, WA 98103, USA
Tel.	+1.206 834 1115
Fax	+1.206 517.5262
E-mail	diorio@impinj.com
URL (optional)	www.impinj.com

© ISO/IEC 2013 – All rights reserved
Documents
Document Sharing Hub
Full document details: BS ISO/IEC 18000-63:2013

Patent Holder:	
Legal Name:	Magellan Technology Pty. Limited
Contact for license application:	
Name & Department:	Ms Jean Angus
Address:	65 Johnston St
Address:	Annandale, NSW 2038, Australia
Tel.	+61 2 9562 9800
Fax	+61 2 9518 7620
E-mail:	license@magellan-technology.com
URL (optional):	www.magellan-technology.com

Patent Holder:	
Legal Name	NXP B.V.
Contact for license application:	
Name & Department	Aaron Waxler – IP Licensing & Claims
Address	411 East Plumeria,
Address	San Jose, CA 95134-1924, USA
Tel.	+1 914 860-4296
Fax	
E-mail	Aaron.Waxler@nxp.com
URL (optional)	

© ISO/IEC 2013 – All rights reserved

Documents
Document Sharing Hub
Full document details: BS ISO/IEC 18000-63:2013

Patent Holder:	
Legal Name	TAGSYS SAS
Contact for license application:	
Name & Department	Mr. Alain Fanet President
Address	785 Voie Antiope, TI Athélia 3
Address	F-13600 La Ciotat
Tel.	+33 332188900
Fax	+33 332188900
E-mail	alain.fanet@tagsysrfid.com
URL (optional)	www.tagsysrfid.com

Attention is drawn to the possibility that some of the elements of this document may be the subject of patent rights other than those identified above. ISO and IEC shall not be held responsible for identifying any or all such patent rights.

The latest information on IP that may be applicable to this part of ISO/IEC 18000 can be found at www.iso.org/patents

© ISO/IEC 2013 – All rights reserved
Documents
Document Sharing Hub
Full document details: BS ISO/IEC 18000-63:2013

Information technology — Radio frequency identification for item management —

Part 63:
Parameters for air interface communications at 860 MHz to 960 MHz Type C

1 Scope

This part of ISO/IEC 18000 defines the air interface for radio frequency identification (RFID) devices operating in the 860 MHz to 960 MHz Industrial, Scientific, and Medical (ISM) band used in item management applications. It provides a common technical specification for RFID devices that can be used by ISO committees developing RFID application standards. This part of ISO/IEC 18000 is intended to allow for compatibility and to encourage inter-operability of products for the growing RFID market in the international marketplace. It defines the forward and return link parameters for technical attributes including, but not limited to, operating frequency, operating channel accuracy, occupied channel bandwidth, maximum effective isotropic radiated power (EIRP), spurious emissions, modulation, duty cycle, data coding, bit rate, bit rate accuracy, bit transmission order, and, where appropriate, operating channels, frequency hop rate, hop sequence, spreading sequence, and chip rate. It further defines the communications protocol used in the air interface.

This part of ISO/IEC 18000 specifies the physical and logical requirements for a passive-backscatter, Interrogator-Talks-First (ITF) systems. The system comprises Interrogators, also known as readers, and tags, also known as labels. An Interrogator receives information from a tag by transmitting a continuous-wave (CW) RF signal to the tag; the tag responds by modulating the reflection coefficient of its antenna, thereby backscattering an information signal to the Interrogator. The system is ITF, meaning that a tag modulates its antenna reflection coefficient with an information signal only after being directed to do so by an Interrogator.

In detail, this part of ISO/IEC 18000 contains Type C.

Type C uses PIE in the forward link and a random slotted collision-arbitration algorithm.

This part of ISO/IEC 18000 specifies

— physical interactions (the signalling layer of the communication link) between Interrogators and tags,

— Interrogator and tag operating procedures and commands,

— the collision arbitration scheme used to identify a specific tag in a multiple-tag environment.

2 Conformance

To claim conformance with this part of ISO/IEC 18000, an Interrogator or tag shall comply with all relevant clauses of this part of ISO/IEC 18000, except those marked as “optional”. The Interrogator or tag shall also operate within local radio regulations, which can further restrict operation.

Relevant conformance test methods are provided in ISO/IEC TR 18047-6.

Conformance can also require a license from the owner of any intellectual property utilized by said device.

Documents
Document Sharing Hub

© ISO/IEC 2013 – All rights reserved

Full document details: BS ISO/IEC 18000-63:2013

2.1 Interrogator conformance and obligations

To conform to this part of ISO/IEC 18000, an Interrogator shall

— support Type C

— implement the mandatory commands defined in this part of ISO/IEC 18000;

— modulate/transmit and receive/demodulate a sufficient set of the electrical signals defined in the signalling layer of this part of ISO/IEC 18000 to communicate with conformant tags; and

— operate within the applicable local regulations.

To conform to this part of ISO/IEC 18000, an Interrogator may

— implement any subset of the optional commands defined in this part of ISO/IEC 18000, and

— implement any proprietary and/or custom commands in conformance with this part of ISO/IEC 18000.

To conform to this part of ISO/IEC 18000, the Interrogator shall not

— implement any command that conflicts with this part of ISO/IEC 18000 or any of the parts 61, 62 and 64, or

— require the use of an optional, proprietary, or custom command to meet the requirements of this part of ISO/IEC 18000.

2.2 Tag conformance and obligations

To conform to this part of ISO/IEC 18000, a tag shall:

— support Type C;

— operate over the frequency range from 860 MHz to 960 MHz, inclusive;

— implement the mandatory commands defined in this part of ISO/IEC 18000 for the supported types;

— modulate a backscatter signal only after receiving the requisite command from an Interrogator; and

— conform to local radio regulations.

To conform to this part of ISO/IEC 18000, a tag may

— implement any subset of the optional commands defined in this part of ISO/IEC 18000; and

— implement any proprietary and/or custom commands as defined in Clauses 7.

To conform to this part of ISO/IEC 18000, a tag shall not:

— implement any command that conflicts with this part of ISO/IEC 18000 or any of the parts 61, 62 and 64;

— require the use of an optional, proprietary, or custom command to meet the requirements of this part of ISO/IEC 18000; or

— modulate a backscatter signal unless commanded to do so by an Interrogator using the signalling layer defined in this part of ISO/IEC 18000.

© ISO/IEC 2013 – All rights reserved
Documents
Document Sharing Hub
Full document details: BS ISO/IEC 18000-63:2013

3 Normative references

The following referenced documents are indispensable for the application of this document. For dated references, only the edition cited applies. For undated references, the latest edition of the referenced document (including any amendments) applies.

ISO/IEC 7816-6, *Identification cards — Integrated circuit cards — Part 6: Interindustry data elements for interchange*

ISO/IEC 15961, *Information technology — Radio frequency identification (RFID) for item management — Data protocol: application interface*

ISO/IEC 15962, *Information technology — Radio frequency identification (RFID) for item management — Data protocol: data encoding rules and logical memory functions*

ISO/IEC 15963, *Information technology — Radio frequency identification for item management — Unique identification for RF tags*

ISO/IEC 19762 (all parts), *Information technology — Automatic identification and data capture (AIDC) techniques — Harmonized vocabulary*

EPCglobal Tag Data Standards version 1.3 and above, EPCglobal Inc.

4 Terms and definitions, symbols and abbreviated terms

4.1 Terms and definitions

For the purposes of this document, the terms and definitions given in ISO/IEC 19762 (all parts) and the following apply.

4.1.1
battery saver mode
battery saving functionality based on low power threshold detection with optional duty cycling

4.1.2
collision arbitration loop
algorithm used to prepare for and handle a dialogue between an Interrogator and a tag

NOTE This is also known as collision arbitration.

4.1.3
cover-coding
method by which an Interrogator obscures information that it is transmitting to a tag by requesting a random number from the tag, then performing a bit-wise EXOR of the data or password with the received random number, and, finally, transmitting the cover-coded (also called ciphertext) string to the tag, which uncovers the data or password by performing a bit-wise EXOR of the received cover-coded string with the original random number

4.1.4
Dense-Interrogator environment
operating environment within which most or all of the available channels are occupied by active Interrogators

EXAMPLE 25 active Interrogators operating in 25 available channels.

© ISO/IEC 2013 – All rights reserved

Documents
Document Sharing Hub
Full document details: BS ISO/IEC 18000-63:2013

4.1.5
EPCglobal Application
application whose MB01 data structure includes a “0” bit in bit 17h and denotes an acceptance of EPCglobal standards and policies

4.1.6
ISO Application
application whose MB01 data structure includes a “1” bit in bit 17h and where bits 18h through 1Fh encode an application family identifier as defined in ISO/IEC 15961-3

4.1.7
physical layer
data coding and modulation waveforms used in Interrogator-to-tag and tag-to-Interrogator signalling

4.1.8
slotted random anticollision
collision-arbitration algorithm where tags load a random (or pseudo-random) number into a slot counter, decrement this slot counter based on Interrogator commands, and reply to the Interrogator when their slot counter reaches zero

4.1.9
Activation
waking up a tag from the **hibernate** (4.1.19) state

4.1.10
battery assistance
battery support for radio frequency communication

4.1.11
battery assisted mode
working mode of battery assisted tags with non-empty battery

4.1.12
Full Function Sensors
sensors that can be user configurable and reset, can produce a detailed set of sensor measurement observations, and can be connected to the RFID tag in a variety of ways

4.1.13
passive mode
working mode of passive tags or battery assisted tags with battery drained below a manufacturer-specific threshold

4.1.14
PacketCRC
16-bit cyclic-redundancy check (CRC) code that a tag may dynamically calculate over its PC, optional XPC, and UII and backscatter during inventory

4.1.15
Simple Sensors
sensors that are factory programmed and not user configurable, producing a single output observation such as a fail/pass condition or simple measurement of a particular sensor activity

4.1.16
Simple Sensor functionality
functionality whereby sensors provide a valid Simple Sensor data address and transmit Simple Sensor data subsequent to the UII as part of the reply to the *ACK* command (Type C) or as part of the TagMsg (Type D)

© ISO/IEC 2013 – All rights reserved
Documents
Document Sharing Hub
Full document details: BS ISO/IEC 18000-63:2013

4.1.17
StoredCRC
16-bit cyclic-redundancy check (CRC) code that a tag calculates over its StoredPC and UII and stores in UII memory at powerup, and can backscatter during inventory

4.1.18
recommissioning
significant altering of a tag's functionality and/or memory contents, as commanded by an Interrogator, typically in response to a change in the tag's usage model or purpose

4.1.19
hibernate
state of energy saving when the device is not required to be used

4.1.20
PacketPC
protocol-control information that a tag with nonzero-valued XI dynamically calculates and backscatters during inventory

4.1.21
StoredPC
protocol-control information stored in UII memory that a tag with zero-valued XI backscatters during inventory

4.1.22
tag energized
tag in the **ready**, **arbitrate, reply, acknowledged, open,** or **secured** state

4.1.23
tag not energized
tag not in the **ready**, **arbitrate, reply, acknowledged, open,** or **secured** state

5 Symbols, abbreviated terms and notations

5.1 Symbols

BAP	battery assisted passive
BLF	backscatter-link frequency (BLF = $1/T_{pri}$ = DR/TRcal)
DR	divide ratio
FT	frequency tolerance
INACT_T	inactivity threshold
M	number of subcarrier cycles per symbol
M_h	RF signal envelope ripple (overshoot)
M_{hh}	FHSS signal envelope ripple (overshoot)
M_{hl}	FHSS signal envelope ripple (undershoot)
M_{hs}	FHSS signal level during a hop
M_l	RF signal envelope ripple (undershoot)
M_s	RF signal level when OFF
Q	slot-count parameter. *Q* is an integer in the range (0,15)

© ISO/IEC 2013 – All rights reserved

Documents
Document Sharing Hub
Full document details: BS ISO/IEC 18000-63:2013

R=>T	Interrogator-to-tag (reader-to-tag)
RTcal	Interrogator-to-tag (reader-to-tag) calibration symbol
T=>R	tag-to-Interrogator (tag-to-reader)
T_1	time from Interrogator transmission to tag response
T_2	time from tag response to Interrogator transmission
T_3	time an Interrogator waits, after T_1, before it issues another command
T_4	minimum time between Interrogator commands
T_f or $T_{f,10\text{-}90\%}$	RF signal envelope fall time
T_{hf}	FHSS signal envelope fall time
T_{hr}	FHSS signal envelope rise time
T_{hs}	time for an FHSS signal to settle to within a specified percentage of its final value
T_{pri}	backscatter-link pulse-repetition interval (T_{pri} = 1/BLF = TRcal/DR)
T_r or $T_{r,10\text{-}90\%}$	RF signal envelope rise time
T_s	time for an RF signal to settle to within a specified percentage of its final value
Tari	reference time interval for a data-0 in Interrogator-to-tag signalling
Tf	fall time
Tr	rise time
TRcal	tag-to-Interrogator (tag-to-reader) calibration symbol
UII	unique item identifier
x_{fp}	floating-point value
$xxxx_2$	binary notation
$xxxx_h$	hexadecimal notation

5.2 Abbreviated terms

AC	activation code
AFI	application family identifier
AMSK	Activation Mask
ASF	application sub family
ASIC	application specific integrated circuit
BAM	battery assisted mode
BAT	battery assisted tag
ciphertext	information that is cover-coded
CRC	cyclic redundancy check
CRC-16	sixteen bit CRC

© ISO/IEC 2013 – All rights reserved
Documents
Document Sharing Hub
Full document details: BS ISO/IEC 18000-63:2013

CRC-5	five bit CRC
CW	continuous wave
dBch	decibels referenced to the integrated power in the reference channel
DBR	dead battery response
DSB	double sideband
DSB-ASK	double-sideband amplitude-shift keying
DSFID	data storage format identifier
DSSS	direct sequence spread spectrum
EOF	end of frame
EPC™	electronic product code
FCC	Federal Communications Commission
FHSS	frequency hopping spread spectrum
Handle	16-bit tag-authentication number
ITF	Interrogator-talks-first

NOTE The common usage is RTF (Reader-talks-first) but the more precise term is ITF, which is used throughout this part of ISO/IEC 18000.

LSB	least significant bit
MSB	most significant bit
NoS	number of sensors
NRZ	non return to zero
NSI	numbering system identifier
OTP	one-time programmable
PC	protocol control
PIE	pulse interval encoding
Pivot	decision threshold differentiating an R=>T data-0 symbol from a data-1 symbol
Plaintext	information that is not cover-coded
PM	passive mode
ppm	parts per million
PR-ASK	phase-reversal amplitude shift keying
R/W	read/write
RFU	reserved for future use
RN16	16-bit random or pseudo-random number
RNG	random or pseudo-random number generator
RO	read only

© ISO/IEC 2013 – All rights reserved

Documents
Document Sharing Hub
Full document details: BS ISO/IEC 18000-63:2013

RTC	real time clock
SDS	Sensor Directory System
SOF	start of frame
SS	Simple Sensor
SSB	single sideband
SSB-ASK	single-sideband amplitude-shift keying
SSD	simple sensor data
TCRS	Tag Capabilities Reporting and Setting
TEDS	Transducer Electronic Data Sheet
TID	tag-identification or tag identifier, depending on context
UMI	user-memory indicator
UTC	universal coordinated time
WC	wildcard
Word	16 bits
XI	XPC_W1 indicator
XPC	extended protocol control
XPC_W1	XPC word 1
XPC_W2	XPC word 2
XEB	XPC extension bit110

5.3 Notation

This part of ISO/IEC 18000 uses the following notational conventions for Type C.

— States and flags are denoted in bold. Example: **ready**.

— Commands are denoted in italics. Variables are also denoted in italics. Where there might be confusion between commands and variables, this part of ISO/IEC 18000 will make an explicit statement. Example: *Query*.

— Command parameters are underlined. Example: <u>Pointer</u>.

— For logical negation, labels are preceded by '~'. Example: If **flag** is true, then **~flag** is false.

— The symbol, R=>T, refers to commands or signalling from an Interrogator to a tag (reader-to-tag).

— The symbol, T=>R, refers to commands or signalling from a tag to an Interrogator (tag-to-reader).

— The term "address" is used as a synonym for "bit address". All addresses specified in the Clauses denoted to Type C are bit-addresses, unless specified differently (e.g. by adding an according prefix such as "word" in "word address"). The same applies for figures, where all shown addresses are to be interpreted as bit-addresses, unless specified differently.

— The term "word" always refers to a 16-bit word.

© ISO/IEC 2013 – All rights reserved
Documents
Document Sharing Hub
Full document details: BS ISO/IEC 18000-63:2013

6 Type C

6.1 Parameter tables

Table 2, Table 2, Table 4 and Table 4 contain the parameters for Type C in accordance with ISO/IEC 18000-1. Detailed description of the operating modes and parameters are specified in the subsequent clauses.

Table 1 — Interrogator to tag link parameters

Ref.	Parameter Name	Description	Reference
Int:1	Operating Frequency Range	860 MHz – 960 MHz, as required by the local regulations	See clause **6.4.1.1**
Int:1a	Default Operating Frequency	Determined by local radio regulations and by the radio-frequency environment at the time of the communication	See clause **6.4.1.1**
Int:1b	Operating Channels (spread-spectrum systems)	In accordance with the local regulations; if the channelisation is unregulated, then as specified	See clause **6.4.1.2.10**, **Annex G**
Int:1c	Operating Frequency Accuracy	As specified	See clause **6.4.1.2.1**
Int:1d	Frequency Hop Rate (frequency-hopping [FHSS] systems)	In accordance with the local regulations	See clause **6.4.1.2.9**
Int:1e	Frequency Hop Sequence (frequency-hopping [FHSS] systems)	In accordance with the local regulations	See clause **6.4.1.2.9**
Int:2	Occupied Channel Bandwidth	In accordance with the local regulations	
Int:2a	Minimum Receiver Bandwidth	In accordance with the local regulations	
Int:3	Interrogator Transmit Maximum EIRP	In accordance with the local regulations	
Int:4	Interrogator Transmit Spurious Emissions	As specified; tighter emission limits may be imposed by the local regulations	See clause **6.4.1.2.11**
Int:4a	Interrogator Transmit Spurious Emissions, In-Band (spread-spectrum systems)	As specified; tighter emission limits may be imposed by the local regulations	See clause **6.4.1.2.11**
Int:4b	Interrogator Transmit Spurious Emissions, Out-of-Band	As specified; tighter emission limits may be imposed by the local regulations	See clause **6.4.1.2.11**
Int:5	Interrogator Transmitter Spectrum Mask	As specified; tighter emission limits may be imposed by the local regulations	**Figure 6**, **Figure 7**
Int:6	Timing	As specified.	See clause **6.4.1.6**, **Figure 16**, **Table 13**
Int:6a	Transmit-to-Receive Turn-Around Time	10 – 310 µs	See clause **6.4.1.6**, **Figure 16**, **Table 13**
Int:6b	Receive-to-Transmit Turn-Around Time	3,5 – 610 µs when tag is in **reply** & **acknowledged** states; no limit otherwise	See clause **6.4.1.6**, **Figure 16**, **Table 13**

© ISO/IEC 2013 – All rights reserved

Documents
Document Sharing Hub
Full document details: BS ISO/IEC 18000-63:2013

Ref.	Parameter Name	Description	Reference
Int:6c	Dwell Time or Interrogator Transmit Power-On Ramp	1500 µs, maximum settling time	See clause **6.4.1.2.6**, **Figure 3**, **Table 6**
Int:6d	Decay Time or Interrogator Transmit Power-Down Ramp	500 µs, maximum	**Figure 3**, **Table 7**
Int:7	Modulation	DSB-ASK, SSB-ASK, or PR-ASK	See clause **6.4.1.2.2**
Int:7a	Spreading Sequence (direct-sequence [DSSS] systems)	Not applicable.	
Int:7b	Chip Rate (spread-spectrum systems)	Not applicable.	
Int:7c	Chip Rate Accuracy (spread-spectrum systems)	Not applicable.	
Int:7d	Modulation Depth	90% nominal	See clause **6.4.1.2.5**, **Figure 2**, **Table 5**
Int:7e	Duty Cycle	48% – 82.3% (time the waveform is high)	See clause **6.4.1.2.3**, **Figure 1**, **Table 5**
Int:7f	FM Deviation	Not applicable.	
Int:8	Data Coding	PIE	See clause **6.4.1.2.3**, **Figure 1**
Int:9	Bit Rate	26.7 kbit/s to 128 kbit/s (assuming equiprobable data)	See clause **6.4.1.2.4**
Int:9a	Bit Rate Accuracy	+/– 1%, minimum	See clause **6.4.1.2.4**
Int:10	Interrogator Transmit Modulation Accuracy	As specified	See clause **6.4.1.2.4**
Int:11	Preamble	Required	See clause **6.4.1.2.8**
Int:11a	Preamble Length	As specified	See clause **6.4.1.2.8**
Int:11b	Preamble Waveform(s)	As specified	See **Figure 4**
Int:11c	Bit Sync Sequence	None	
Int:11d	Frame Sync Sequence	Required	See clause **6.4.1.2.8**, **Figure 4**
Int:12	Scrambling (spread-spectrum systems)	Not Applicable.	
Int:13	Bit Transmission Order	MSB is transmitted first	See clause **6.4.1.4**
Int:14	Wake-up process	As specified	See clause **6.4.1.2**
Int:15	Polarization	Not specified	

© ISO/IEC 2013 – All rights reserved
Documents
Document Sharing Hub
Full document details: BS ISO/IEC 18000-63:2013

Table 2 — Tag to Interrogator link parameters

Ref.	Parameter Name	Description	Reference
Tag:1	Operating Frequency Range	860 MHz – 960 MHz, inclusive	See clause **6.4.1.1**
Tag:1a	Default Operating Frequency	Tags respond to Interrogator signals that satisfy Int:1a	See clause **6.4.1.1**
Tag:1b	Operating Channels (spread-spectrum systems)	Tags respond to Interrogator signals that satisfy Int:1b	See clause **6.4.1.2.10**
Tag:1c	Operating Frequency Accuracy	As specified	See clause **6.4.1.3.3** **Table 9**
Tag:1d	Frequency Hop Rate (frequency-hopping [FHSS] systems)	Tags respond to Interrogator signals that satisfy Int:1d	See clause **6.4.1.2.9**
Tag:1e	Frequency Hop Sequence (frequency-hopping [FHSS] systems)	Tags respond to Interrogator signals that satisfy Int:1e	See clause **6.4.1.2.9**
Tag:2	Occupied Channel Bandwidth	In accordance with the local regulations	
Tag:3	Transmit Maximum EIRP	In accordance with the local regulations	
Tag:4	Transmit Spurious Emissions	In accordance with the local regulations	
Tag:4a	Transmit Spurious Emissions, In-Band (spread spectrum systems)	In accordance with the local regulations	
Tag:4b	Transmit Spurious Emissions, Out-of-Band	In accordance with the local regulations	
Tag:5	Transmit Spectrum Mask	In accordance with the local regulations	
Tag:6a	Transmit-to-Receive Turn-Around Time	3,5 – 610 µs in **reply** & **acknowledged** states; no limit otherwise	See clause **6.4.1.6**, **Figure 16**, **Table 13**
Tag:6b	Receive-to-Transmit Turn-Around Time	10 – 310 µs	See clause **6.4.1.6**, **Figure 16**, **Table 13**
Tag:6c	Dwell Time or Transmit Power-On Ramp	Receive commands 1.5 ms after power-up	See clause **6.4.1.2**
Tag:6d	Decay Time or Transmit Power-Down Ramp	Not applicable.	
Tag:7	Modulation	ASK and/or PSK modulation (selected by tag)	See clause **6.4.1.3.1**
Tag:7a	Spreading Sequence (direct sequence [DSSS] systems)	Not applicable.	
Tag:7b	Chip Rate (spread spectrum systems)	Not applicable.	
Tag:7c	Chip Rate Accuracy (spread spectrum systems)	Not applicable.	
Tag:7d	On-Off Ratio	Not specified	

© ISO/IEC 2013 – All rights reserved

Documents
Document Sharing Hub
Full document details: BS ISO/IEC 18000-63:2013

Ref.	Parameter Name	Description	Reference
Tag:7e	Subcarrier Frequency	40 kHz to 640 kHz	See clause **6.4.1.3.3** **Table 9**
Tag:7f	Subcarrier Frequency Accuracy	As specified	**Table 9**
Tag:7g	Subcarrier Modulation	Miller, at the data rate	See clause **6.4.1.3.2.3** , **Figure 13**
Tag:7h	Duty Cycle	FM0: 50%, nominal Subcarrier: 50%, nominal	See clause **6.4.1.3.2.1** , **6.4.1.3.2.3**
Tag:7i	FM Deviation	Not applicable.	
Tag:8	Data Coding	Baseband FM0 or Miller-modulated subcarrier (selected by the Interrogator)	See clause **6.4.1.3.2**
Tag:9	Bit Rate	FM0: 40 kbps to 640 kbps Subcarrier modulated: 5 kbps to 320 kbps	See clause **6.4.1.3.3** **Table 9**
Tag:9a	Bit Rate Accuracy	Same as Subcarrier Frequency Accuracy; see Tag:7f	See clause **6.4.1.3.3**, **Table 9**, **Table 10**
Tag:10	Tag Transmit Modulation Accuracy (frequency-hopping [FHSS] systems	Not applicable.	
Tag:11	Preamble	Required	See clause **6.4.1.3.2.2** , See clause **6.4.1.3.2.4**
Tag:11a	Preamble Length	As specified	See **Table 9**, See **Figure 15**
Tag:11b	Preamble Waveform	As specified	See **Table 9**, See **Figure 15**
Tag:11c	Bit-Sync Sequence	None	
Tag:11d	Frame-Sync Sequence	None	
Tag:12	Scrambling (spread-spectrum systems)	Not applicable.	
Tag:13	Bit Transmission Order	MSB is transmitted first	See clause **6.4.1.4**
Tag:14	Reserved	Deliberately left blank.	
Tag:15	Polarization	Tag dependent; not specified by this document	
Tag:16	Minimum Tag Receiver Bandwidth	Tag dependent; not specified by this document	

© ISO/IEC 2013 – All rights reserved
Documents
Document Sharing Hub
Full document details: BS ISO/IEC 18000-63:2013

Table 3 — Protocol parameters

Ref.	Parameter Name	Description	Reference
P:1	Who talks first	Interrogator	See clause **6.4**
P:2	Tag addressing capability	As specified	See clause **6.4.2.1**
P:3	Tag ID	Contained in tag memory	See clause **6.4.2.1.3**
P:3a	Tag ID Length	Variable, as specified in clause **6.4.2.1.3**	See clause **6.4.2.1.3**
P:3b	Tag ID Format	see clause **6.4.2.1.3**	See clause **6.4.2.1.3**
P:4	Read size	Multiples of 16 bits.	See clause **6.4.2.11.3.2** **Table 34**
P:5	Write Size	Multiples of 16 bits	See clause **6.4.2.11.3.3**, **Table 36**, See clause **6.4.2.11.3.7**, **Table 47**
P:6	Read Transaction Time	Varied with R=>T and T=>R link rate and number of bits being read	See clause **6.4.2.11.3.2**
P:7	Write Transaction Time	20 ms (maximum) after end of *Write* command	See clause **6.4.2.11.3.3**, See clause **6.4.2.11.3.7**, **Figure 22**
P:8	Error detection	Interrogator-to-tag: *Select* command: CRC-16 *Query* command: CRC-5 Other Inventory commands: Command length Access commands: CRC-16 Tag-to-Interrogator: PC, UII: CRC-16 RN16: None or CRC-16 (varies with command) handle: CRC-16 All other: CRC-16	See clause **6.4.2.10** and its subsections
P:9	Error correction	None	
P:10	Memory size	Tag dependent, extensible (size is neither limited nor specified by this document)	
P:11	Command structure and extensibility	As specified.	**Table 19**

© ISO/IEC 2013 – All rights reserved

Documents
Document Sharing Hub
Full document details: BS ISO/IEC 18000-63:2013

Table 4 — Anti-collision parameters

Ref.	Parameter Name	Description	Reference
A:1	Type (Probabilistic or Deterministic)	Probabilistic	See clause **6.4.2.6**
A:2	Linearity	Linear up to 2^{15} tags in the Interrogator's RF field; above that number, NlogN for tags with unique UIIs	See clause **6.4.2.8**
A:3	Tag inventory capacity	Unlimited for tags with unique UIIs.	See clause **6.4.2.8**

6.2 Protocol overview

6.2.1 Physical layer

An Interrogator sends information to one or more tags by modulating an RF carrier using double-sideband amplitude shift keying (DSB-ASK), single-sideband amplitude shift keying (SSB-ASK), or phase-reversal amplitude shift keying (PR-ASK) using a pulse-interval encoding (PIE) format. Tags receive their operating energy from this same modulated RF carrier.

An Interrogator receives information from a tag by transmitting an unmodulated RF carrier and listening for a backscattered reply. Tags communicate information by backscatter modulating the amplitude and/or phase of the RF carrier. The encoding format, selected in response to Interrogator commands, is either FM0 or Miller-modulated subcarrier. The communications link between Interrogators and tags is half-duplex, meaning that tags shall not be required to demodulate Interrogator commands while backscattering. A tag shall not respond to a mandatory or optional command using full-duplex communications.

6.2.2 Tag-identification layer

An Interrogator manages tag populations using three basic operations:

Select. The operation of choosing a tag population for inventory and access. A *Select* command may be applied successively to select a particular tag population based on user-specified criteria. This operation is analogous to selecting records from a database.

Inventory. The operation of identifying tags. An Interrogator begins an inventory round by transmitting a *Query* command in one of four sessions. One or more tags may reply. The Interrogator detects a single tag reply and requests the PC/XPC word(s), UII, and CRC from the tag. Inventory comprises multiple commands. An inventory round operates in one and only one session at a time.

Access. The operation of communicating with (reading from and/or writing to) a tag. An individual tag must be uniquely identified prior to access. Access comprises multiple commands, some of which employ one-time-pad based cover-coding of the R=>T link.

6.3 Command types and command structure

6.3.1 General

This clause defines 4 command types: Mandatory, optional, custom, and proprietary.

All commands defined in this International Standard are either mandatory or optional, as specified in the definition of the command itself. Custom or proprietary commands are vendor-defined.

© ISO/IEC 2013 – All rights reserved
Documents
Document Sharing Hub
Full document details: BS ISO/IEC 18000-63:2013

6.3.2 Mandatory

Conformant tags shall support all mandatory commands.

Conformant Interrogators shall support all mandatory commands.

6.3.3 Optional

Tags may or may not support optional commands.

Interrogators may or may not support optional commands.

If an optional command is used, it shall be implemented in the manner specified in this document.

6.3.4 Custom

Custom commands are not specified in this document.

An Interrogator shall issue a custom command only after (i) singulating a tag, and (ii) reading (or having prior knowledge of) the tag manufacturer's identification in the tag's TID memory. An Interrogator shall use a custom command only in accordance with the specifications of the tag manufacturer identified in the tag ID.

A custom command shall not solely duplicate the functionality of any mandatory or optional command defined in this International Standard by a different method.

6.3.5 Proprietary

Proprietary commands are not specified in this document.

All proprietary commands shall be capable of being permanently disabled. Proprietary commands are intended for manufacturing purposes and shall not be used in field-deployed RFID systems.

6.4 Description of operating procedure

The operating procedure defines the physical and logical requirements for an ITF, random-slotted collision arbitration, RFID system operating in the 860 MHz – 960 MHz frequency range.

6.4.1 Signalling

The signalling interface between an Interrogator and a tag may be viewed as the physical layer in a layered network communication system. The signalling interface defines frequencies, modulation, data coding, RF envelope, data rates, and other parameters required for RF communications.

6.4.1.1 Operational frequencies

Tags shall receive power from and communicate with Interrogators within the frequency range from 860 MHz to 960 MHz, inclusive. An Interrogator's choice of operational frequency will be determined by local radio regulations and by the local radio-frequency environment. Interrogators that are claimed to operate in Dense-Interrogator environments shall support, but are not required to always use, the optional Dense-Interrogator mode described in Annex G.

6.4.1.2 Interrogator-to-Tag (R=>T) communications

An Interrogator communicates with one or more tags by modulating an RF carrier using DSB-ASK, SSB-ASK, or PR-ASK with PIE encoding. Interrogators shall use a fixed modulation format and data rate for the duration of an inventory round, where "inventory round" is defined in ISO/IEC 19762. The Interrogator sets the data rate by means of the preamble that initiates the round.

Documents
Document Sharing Hub

© ISO/IEC 2013 – All rights reserved

Full document details: BS ISO/IEC 18000-63:2013

The high values in Figure 1, Figure 2, Figure 3, Figure 4 and Figure 5, correspond to emitted CW (i.e. an Interrogator delivering power to the tag or tags) whereas the low values correspond to attenuated CW.

6.4.1.2.1 Interrogator frequency accuracy

Interrogators that claim to operate in single- or Multiple-Interrogator environments shall have a frequency accuracy that meets the local regulations.

Interrogators that are claimed to operate in Dense-Interrogator environments shall have a frequency accuracy of +/– 10 ppm over the nominal temperature range (–25 °C to +40 °C), and +/– 20 ppm over the extended temperature range (–40°C to +65 °C) while transmitting, unless the local regulations specify tighter accuracy, in which case the Interrogator frequency accuracy shall meet the local regulations.

Interrogators rated by the manufacturer to have a temperature range wider than nominal but different from extended shall have a frequency accuracy of +/– 10 ppm over the nominal temperature range and +/– 20 ppm to the extent of their rated range. If the local regulations specify tighter frequency accuracy then the Interrogator shall meet the local regulations.

6.4.1.2.2 Modulation

Interrogators shall communicate using DSB-ASK, SSB-ASK, or PR-ASK modulation, detailed in Annex H. Tags shall demodulate all three modulation types.

6.4.1.2.3 Data encoding

The R=>T link shall use PIE, shown in Figure 1. Tari is the reference time interval for Interrogator-to-tag signalling, and is the duration of a data-0. High values represent transmitted CW; low values represent attenuated CW. Pulse modulation depth, rise time, fall time, and PW shall be as specified in Table 5, and shall be the same for a data-0 and a data-1. Interrogators shall use a fixed modulation depth, rise time, fall time, PW, Tari, data-0 length, and data-1 length for the duration of an inventory round. The RF envelope shall be as specified in Figure 2.

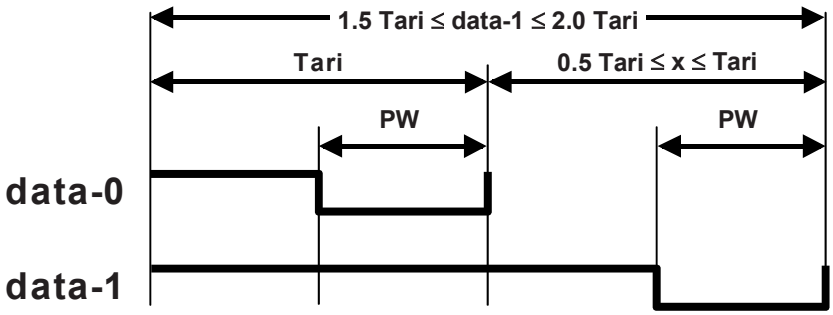

Figure 1 — PIE Symbols

6.4.1.2.4 Tari values

Interrogators shall communicate using Tari values in the range of 6.25µs to 25µs. Interrogator compliance shall be evaluated using at least one Tari value between 6.25µs and 25µs with at least one value of the parameter *x*. The tolerance on all parameters specified in units of Tari shall be +/–1%. The choice of Tari value and *x* shall be in accordance with local radio regulations.

6.4.1.2.5 R=>T RF envelope

The R=>T RF envelope shall comply with Figure 2 and Table 5. The electric or magnetic field strength A (as appropriate) is the maximum amplitude of the RF envelope, measured in units of V/m or A/m, respectively. Tari is defined in Figure 1. The pulsewidth is measured at the 50% point on the pulse. An Interrogator shall not change the R=>T modulation type (i.e. shall not switch between DSB-ASK, SSB-ASK, or PR-ASK) without first powering down its RF waveform (see 6.4.1.2.7).

© ISO/IEC 2013 – All rights reserved
Documents
Document Sharing Hub
Full document details: BS ISO/IEC 18000-63:2013

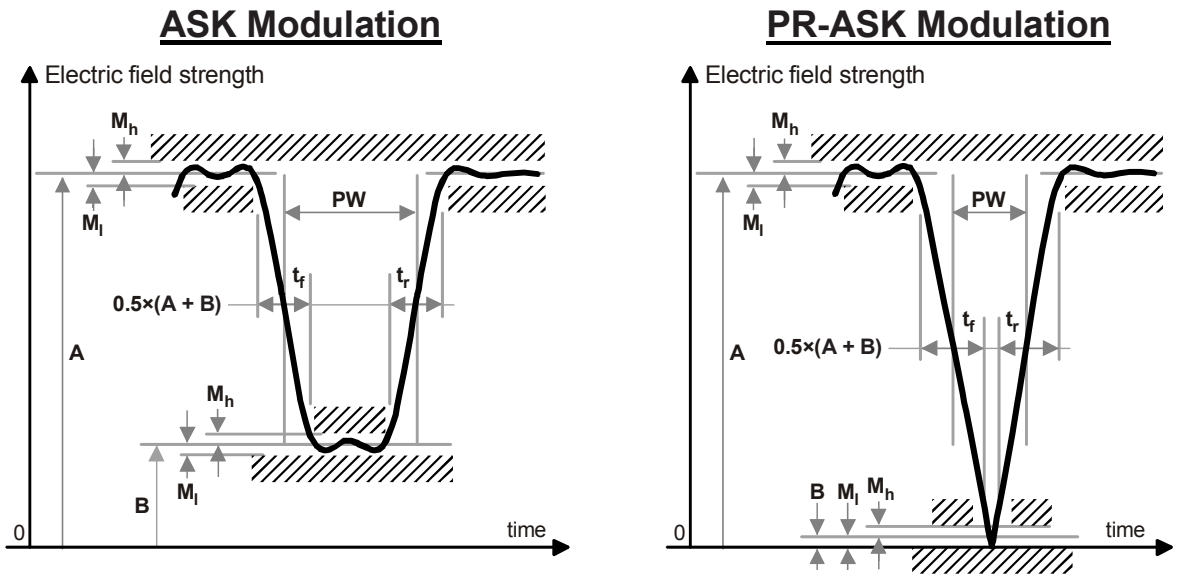

Figure 2 — Interrogator-to-Tag RF envelope

Table 5 — RF envelope parameters

Tari	Parameter	Symbol	Minimum	Nominal	Maximum	Units
6.25 µs to 25 µs	Modulation Depth	(A–B)/A	80	90	100	%
	RF Envelope Ripple	$M_h = M_l$	0		0.05(A–B)	V/m
	RF Envelope Rise Time	$t_{r,10–90\%}$	0		0.33Tari	µs
	RF Envelope Fall Time	$t_{f,10–90\%}$	0		0.33Tari	µs
	RF Pulsewidth	PW	MAX(0.265Tari, 2)		0.525Tari	µs

6.4.1.2.6 Interrogator power-up waveform

The Interrogator power-up RF envelope shall comply with Figure 3 and Table 6. Once the carrier level has risen above the 10% level, the power-up envelope shall rise monotonically until at least the ripple limit M_l. The RF envelope shall not fall below the 90% point in Figure 3 during interval T_s. Interrogators shall not issue commands before the end of the maximum settling-time interval in Table 6 (i.e. before the end of T_s). Interrogators shall meet the frequency-accuracy requirement specified in 6.4.1.2.1 by the end of interval T_s in Figure 3.

6.4.1.2.7 Interrogator power-down waveform

The Interrogator power-down RF envelope shall comply with Figure 3 and Table 7. Once the carrier level has fallen below the 90% level, the power-down envelope shall fall monotonically until the power-off limit M_s. Once powered off, an Interrogator shall remain powered off for a least 1ms before powering up again.

© ISO/IEC 2013 – All rights reserved

Documents
Document Sharing Hub
Full document details: BS ISO/IEC 18000-63:2013

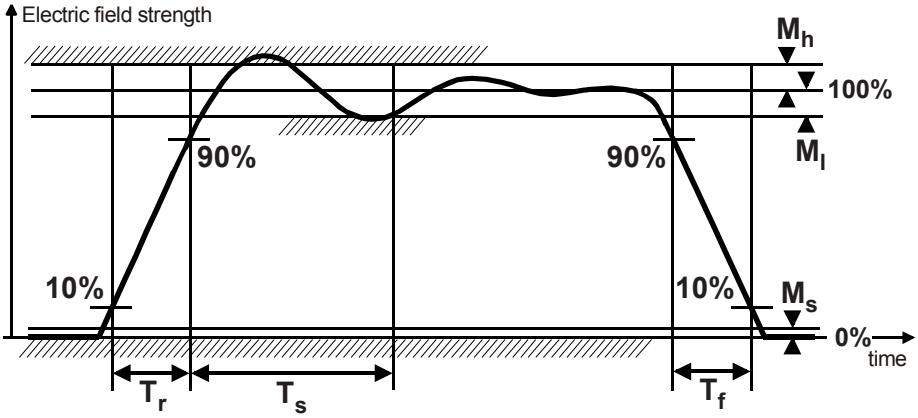

Figure 3 — Interrogator power-up and power-down RF envelope

Table 6 — Interrogator power-up waveform parameters

Parameter	Definition	Minimum	Nominal	Maximum	Units
T_r	Rise time	1		500	µs
T_s	Settling time			1500	µs
M_s	Signal level when OFF			1	% full scale
M_l	Undershoot			5	% full scale
M_h	Overshoot			5	% full scale

Table 7 — Interrogator power-down waveform parameters

Parameter	Definition	Minimum	Nominal	Maximum	Units
T_f	Fall time	1		500	µs
M_s	Signal level when OFF			1	% full scale
M_l	Undershoot			5	% full scale
M_h	Overshoot			5	% full scale

6.4.1.2.8 R=>T preamble and frame-sync

An Interrogator shall begin all R=>T signalling with either a preamble or a frame-sync, both of which are shown in Figure 4. A preamble shall precede a *Query* command (see 6.4.2.11.2.1) and denotes the start of an inventory round. All other signalling shall begin with a frame-sync. The tolerance on all parameters specified in units of Tari shall be +/–1%. PW shall be as specified in Table 5. The RF envelope shall be as specified in Figure 2.

© ISO/IEC 2013 – All rights reserved
Documents
Document Sharing Hub
Full document details: BS ISO/IEC 18000-63:2013

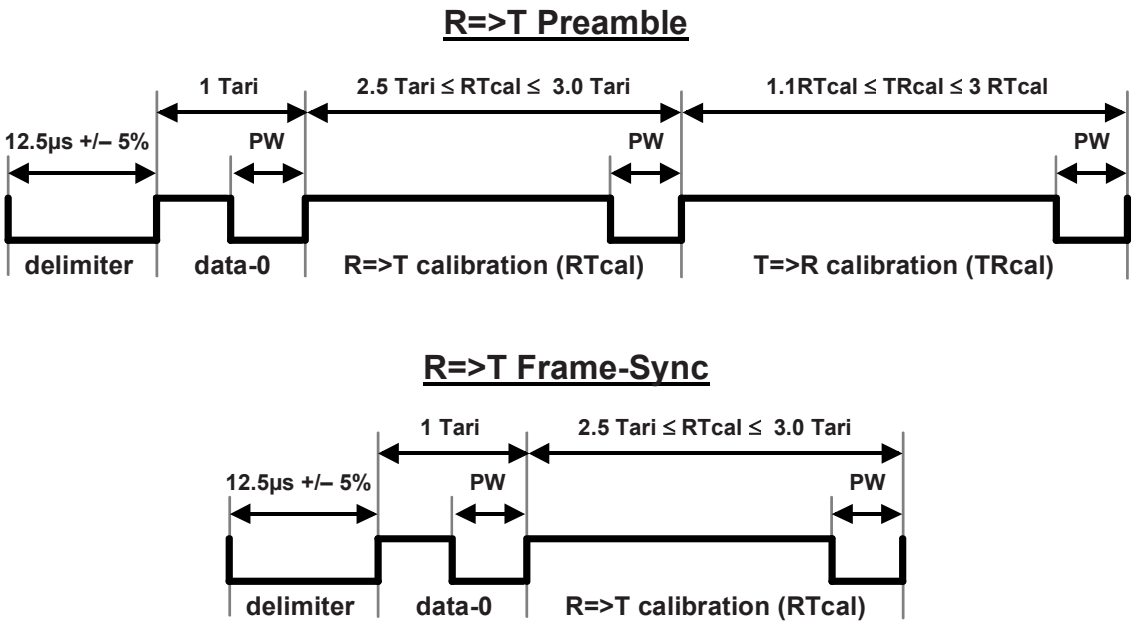

Figure 4 — R=>T preamble and frame-sync

A preamble shall comprise a fixed-length start delimiter, a data-0 symbol, an R=>T calibration (RTcal) symbol, and a T=>R calibration (TRcal) symbol.

RTcal: An Interrogator shall set RTcal equal to the length of a data-0 symbol plus the length of a data-1 symbol (RTcal = 0_{length} + 1_{length}). A tag shall measure the length of RTcal and compute *pivot* = RTcal / 2. A tag shall interpret subsequent Interrogator symbols shorter than *pivot* to be data-0s, and subsequent Interrogator symbols longer than *pivot* to be data-1s. A tag shall interpret symbols longer than 4 RTcal to be invalid. Prior to changing RTcal, an Interrogator shall transmit CW for a minimum of 8 RTcal.

TRcal: An Interrogator shall specify a tag's backscatter link frequency (its FM0 datarate or the frequency of its Miller subcarrier) using the TRcal and divide ratio (DR) in the preamble and payload, respectively, of a *Query* command that initiates an inventory round. Equation (1) specifies the relationship between the backscatter link frequency (BLF), TRcal, and DR. A tag shall measure the length of TRcal, compute BLF, and adjust its T=>R link rate to be equal to BLF (Table 9 shows BLF values and tolerances). The TRcal and RTcal that an Interrogator uses in any inventory round shall meet the constraints in Equation (2):

$$\mathrm{BLF} = \frac{\mathrm{DR}}{\mathrm{TRcal}} \tag{1}$$

$$1.1 \times \mathrm{RTcal} \le \mathrm{TRcal} \le 3 \times \mathrm{RTcal} \tag{2}$$

A frame-sync is identical to a preamble, minus the TRcal symbol. An Interrogator, for the duration of an inventory round, shall use the same length RTcal in a frame-sync as it used in the preamble that initiated the round.

6.4.1.2.9 Frequency-hopping spread-spectrum waveform

When an Interrogator uses frequency-hopping spread spectrum (FHSS) signalling, the Interrogator's RF envelope shall comply with Figure 5 and Table 8. The RF envelope shall not fall below the 90% point in Figure 5 during interval T_{hs}. Interrogators shall not issue commands before the end of the maximum settling-time interval in Table 8 (i.e. before T_{hs}). The maximum time between frequency hops and the minimum RF-off time during a hop shall meet local regulatory requirements. Interrogators shall meet the frequency-accuracy requirement specified in 6.4.1.2.1 by the end of interval T_{hs} in Figure 5.

© ISO/IEC 2013 – All rights reserved

Documents
Document Sharing Hub
Full document details: BS ISO/IEC 18000-63:2013

6.4.1.2.10 Frequency-hopping spread-spectrum channelisation

Interrogators that are claimed to operate in single-Interrogator environments shall meet the local regulations for spread-spectrum channelisation. Interrogators that are claimed to operate in multiple- or Dense-Interrogator environments shall meet the local regulations for spread-spectrum channelisation, unless the channelisation is unregulated, in which case Interrogators shall adopt the channelisation described by Annex G (Annex G describes multiple- and Dense-Interrogator channelised signalling).

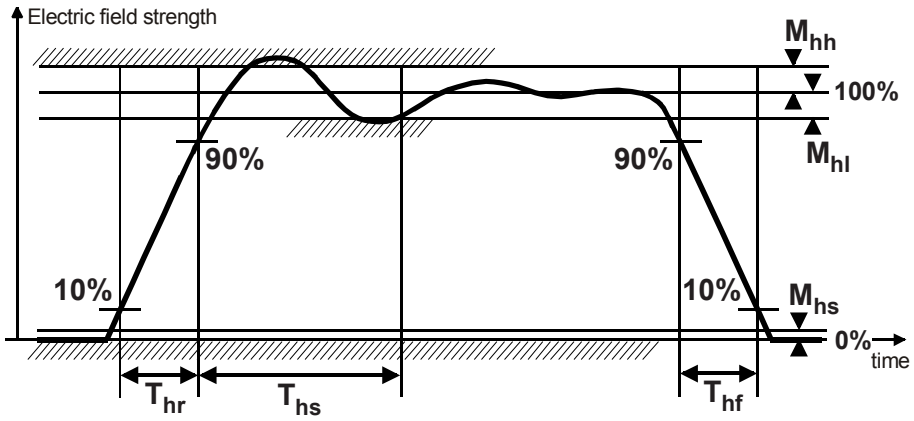

Figure 5 — FHSS Interrogator RF envelope

Table 8 — FHSS waveform parameters

Parameter	Definition	Minimum	Nominal	Maximum	Units
T_{hr}	Rise time			500	µs
T_{hs}	Settling time			1500	µs
T_{hf}	Fall time			500	µs
M_{hs}	Signal level during hop			1	% full scale
M_{hl}	Undershoot			5	% full scale
M_{hh}	Overshoot			5	% full scale

6.4.1.2.11 Transmit mask

Interrogators that are claimed to operate according to this International Standard shall meet the local regulations for out-of-channel and out-of-band spurious radio-frequency emissions.

Interrogators that are claimed to operate in Multiple-Interrogator environments, in addition to meeting the local regulations, shall also meet the Multiple-Interrogator Transmit Mask specified in this International Standard:

Multiple-Interrogator Transmit Mask: For an Interrogator transmitting random data in channel *R*, and any other channel $S \neq R$, the ratio of the integrated power *P*() in channel *S* to that in channel *R* shall not exceed the specified values:

$|R - S| = 1$: $10\log_{10}(P(S) / P(R)) < -20$ dB
$|R - S| = 2$: $10\log_{10}(P(S) / P(R)) < -50$ dB
$|R - S| = 3$: $10\log_{10}(P(S) / P(R)) < -60$ dB

© ISO/IEC 2013 – All rights reserved
Documents
Document Sharing Hub
Full document details: BS ISO/IEC 18000-63:2013

$|R - S| > 3$: $10\log_{10}(P(S) / P(R)) < -65$ dB

Where $P()$ denotes the total integrated power in the specified channel. This mask is shown graphically in Figure 6, with dBch defined as dB referenced to the integrated power in the reference channel. The channel width shall be as specified by the local regulations, unless the width is unregulated, in which case Interrogators shall adopt a channel width as described in Annex I. The channel spacing shall be set equal to the channel width (measured channel centre to channel centre). For any transmit channel R, two exceptions to the mask are permitted, provided that

neither exception exceeds –50 dBch, and

neither exception exceeds local regulatory requirements.

An exception occurs when the integrated power in a channel S exceeds the mask. Each channel that exceeds the mask shall be counted as an exception.

Interrogators that are claimed to operate in Dense-Interrogator environments shall meet both the local regulations and the Transmit Mask shown in Figure 6 of this International Standard, except when operating in the optional Dense-Interrogator mode described in Annex G, in which case they shall instead meet the Dense-Interrogator Transmit Mask described below and shown in Figure 7. Interrogators may meet the Dense-Interrogator Transmit Mask during non-Dense-Interrogator operation. Regardless of the mask used, Interrogators certified for operation in Dense-Interrogator environments shall not be permitted the two exceptions to the transmit mask that are allowed for Interrogators certified for operation in Multiple-Interrogator environments.

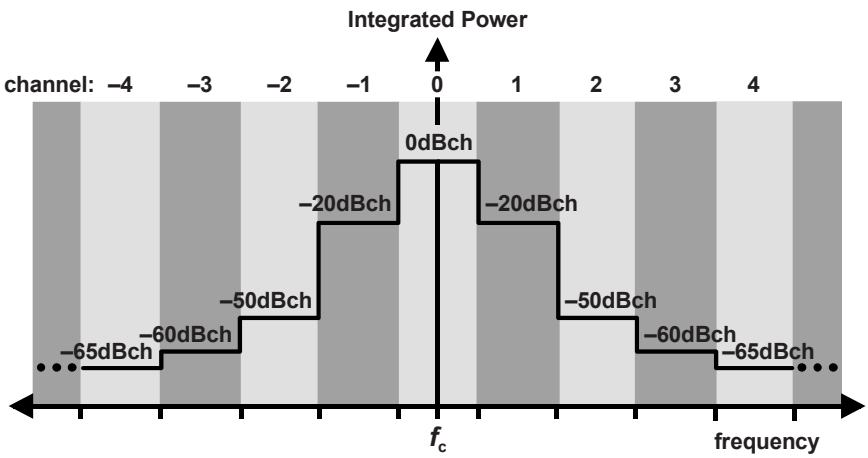

Figure 6 — Transmit mask for Multiple-Interrogator environments

Dense-Interrogator Transmit Mask: For Interrogator transmissions centred at a frequency f_c, a 2.5/Tari bandwidth R_{BW} also centred at f_c, an offset frequency f_o = 2.5/Tari, and a 2.5/Tari bandwidth S_{BW} centred at $(n \times f_o) + f_c$ (integer n), the ratio of the integrated power $P()$ in S_{BW} to that in R_{BW} with the Interrogator transmitting random data shall not exceed the specified values:

$|n| = 1$: $10\log_{10}(P(S_{BW}) / P(R_{BW})) < -30$ dB

$|n| = 2$: $10\log_{10}(P(S_{BW}) / P(R_{BW})) < -60$ dB

$|n| > 2$: $10\log_{10}(P(S_{BW}) / P(R_{BW})) < -65$ dB

Where $P()$ denotes the total integrated power in the 2.5/Tari reference bandwidth. This mask is shown graphically in Figure 7, with dBch defined as dB referenced to the integrated power in the reference channel.

© ISO/IEC 2013 – All rights reserved

Documents
Document Sharing Hub
Full document details: BS ISO/IEC 18000-63:2013

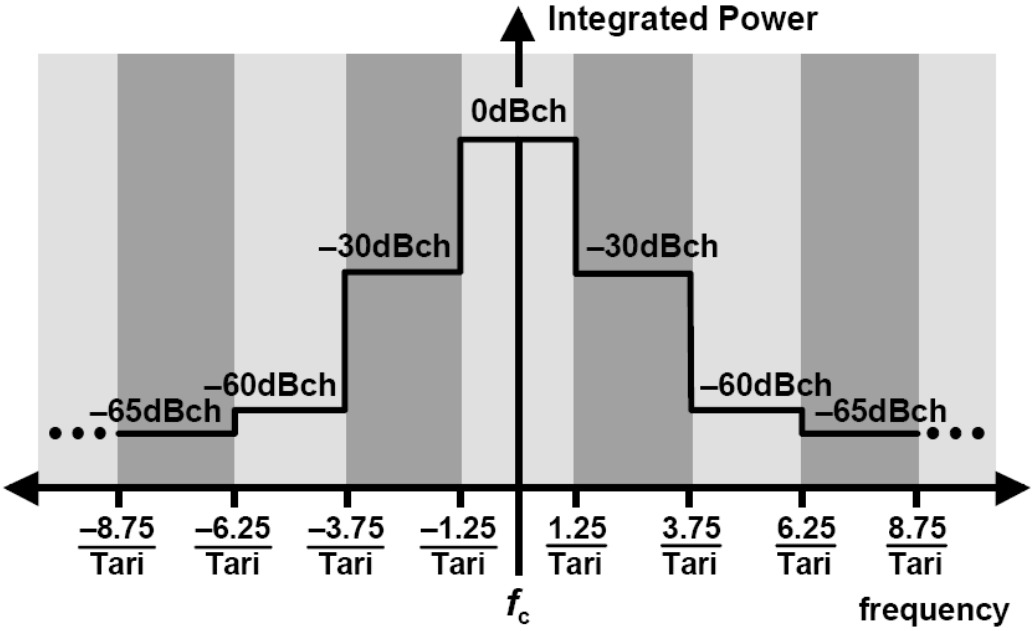

Figure 7 — Transmit mask for Dense-Interrogator environments

NOTE It is recommended that future Interrogator designs fulfill the Dense Interrogator transmit mask. Additional information is provided in Annex Q.

6.4.1.3 Tag-to-Interrogator (T=>R) communications

A tag communicates with an Interrogator using backscatter modulation, in which the tag switches the reflection coefficient of its antenna between two states in accordance with the data being sent.

A tag shall backscatter using a fixed modulation format, data encoding, and data rate for the duration of an inventory round, where "inventory round" is defined in 6.4.2.8. The tag selects the modulation format; the Interrogator selects the encoding and data rate by means of the *Query* command that initiates the round. The low values in Figure 9, Figure 10, Figure 11, Figure 13, Figure 14 and Figure 15 correspond to the antenna-reflectivity state the tag exhibits during the CW period prior to a T=>R preamble (e.g. an ASK tag absorbing power), whereas the high values correspond to the antenna-reflectivity state the tag exhibits during the first high pulse of a T=>R preamble (e.g. an ASK tag reflecting power).

6.4.1.3.1 Modulation

Tag backscatter shall use ASK and/or PSK modulation. The tag vendor selects the modulation format. Interrogators shall demodulate both modulation types.

6.4.1.3.2 Data encoding

Tags shall encode the backscattered data as either FM0 baseband or Miller modulation of a subcarrier at the data rate. The Interrogator commands the encoding choice.

6.4.1.3.2.1 FM0 baseband

Figure 8 shows basis functions and a state diagram for generating FM0 (bi-phase space) encoding. FM0 inverts the baseband phase at every symbol boundary; a data-0 has an additional mid-symbol phase inversion. The state diagram in Figure 8 maps a logical data sequence to the FM0 basis functions that are transmitted. The state labels, S_1–S_4, indicate four possible FM0-encoded symbols, represented by the two phases of each of the FM0 basis functions. The state labels also represent the FM0 waveform that is transmitted upon entering the state. The labels on the state transitions indicate the logical values of the data

© ISO/IEC 2013 – All rights reserved
Documents
Document Sharing Hub
Full document details: BS ISO/IEC 18000-63:2013

sequence to be encoded. For example, a transition from state S_2 to S_3 is disallowed because the resulting transmission would not have a phase inversion on a symbol boundary.

Figure 9 shows generated baseband FM0 symbols and sequences. The duty cycle of a 00 or 11 sequence, measured at the modulator output, shall be a minimum of 45% and a maximum of 55%, with a nominal value of 50%. FM0 encoding has memory; consequently, the choice of FM0 sequences in Figure 9 depends on prior transmissions. FM0 signalling shall always end with a "dummy" data-1 bit at the end of a transmission, as shown in Figure 10.

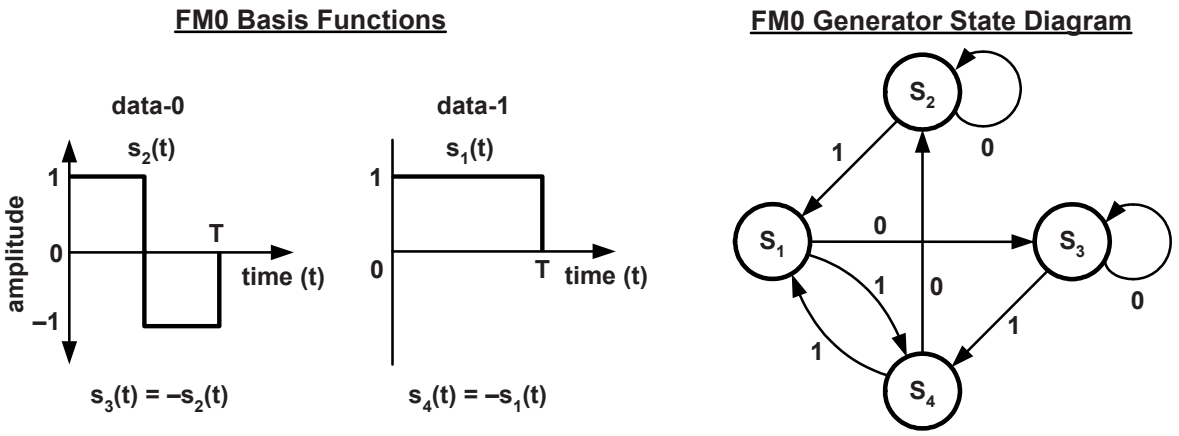

Figure 8 — FM0 basis functions and generator state diagram

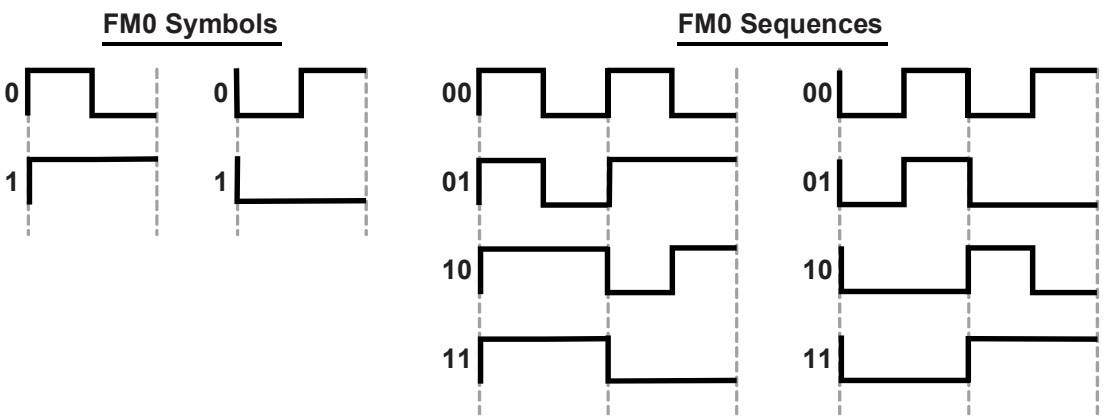

Figure 9 — FM0 symbols and sequences

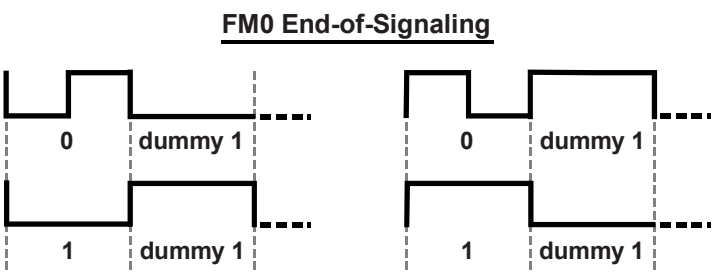

Figure 10 — Terminating FM0 transmissions

© ISO/IEC 2013 – All rights reserved

Documents
Document Sharing Hub
Full document details: BS ISO/IEC 18000-63:2013

6.4.1.3.2.2 FM0 preamble

T=>R FM0 signalling shall begin with one of the two preambles shown in Figure 11. The choice depends on the value of the TRext bit specified in the *Query* command that initiated the inventory round, unless a tag is replying to a command that writes to memory, in which case a tag shall use the extended preamble regardless of TRext (i.e. the tag replies as if TRext=1 regardless of the TRext value specified in the *Query*—see 6.4.2.11.3). The "v" shown in Figure 11 indicates an FM0 violation (i.e. a phase inversion should have occurred but did not).

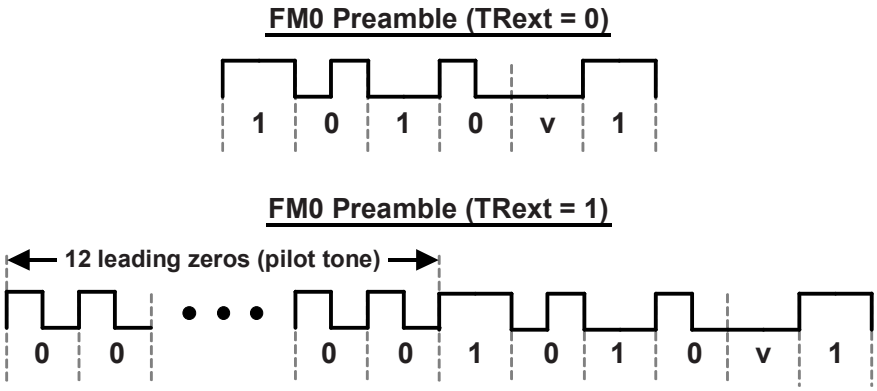

Figure 11 — FM0 T=>R preamble

6.4.1.3.2.3 Miller-modulated subcarrier

Figure 12 shows basis functions and a state diagram for generating Miller encoding. Baseband Miller inverts its phase between two data-0s in sequence. Baseband Miller also places a phase inversion in the middle of a data-1 symbol. The state diagram in Figure 12 maps a logical data sequence to baseband Miller basis functions. The state labels, S_1–S_4, indicate four possible Miller-encoded symbols, represented by the two phases of each of the Miller basis functions. The state labels also represent the baseband Miller waveform that is generated upon entering the state. The transmitted waveform is the baseband waveform multiplied by a square-wave at M times the symbol rate. The labels on the state transitions indicate the logical values of the data sequence to be encoded. For example, a transition from state S_1 to S_3 is disallowed because the resulting transmission would have a phase inversion on a symbol boundary between a data-0 and a data-1.

Figure 13 shows Miller-modulated subcarrier sequences; the Miller sequence shall contain exactly two, four, or eight subcarrier cycles per bit, depending on the M value specified in the *Query* command that initiated the inventory round (see Figure 12). The duty cycle of a 0 or 1 symbol, measured at the modulator output, shall be a minimum of 45% and a maximum of 55%, with a nominal value of 50%. Miller encoding has memory; consequently, the choice of Miller sequences in Figure 13 depends on prior transmissions. Miller signalling shall always end with a "dummy" data-1 bit at the end of a transmission, as shown in Figure 14.

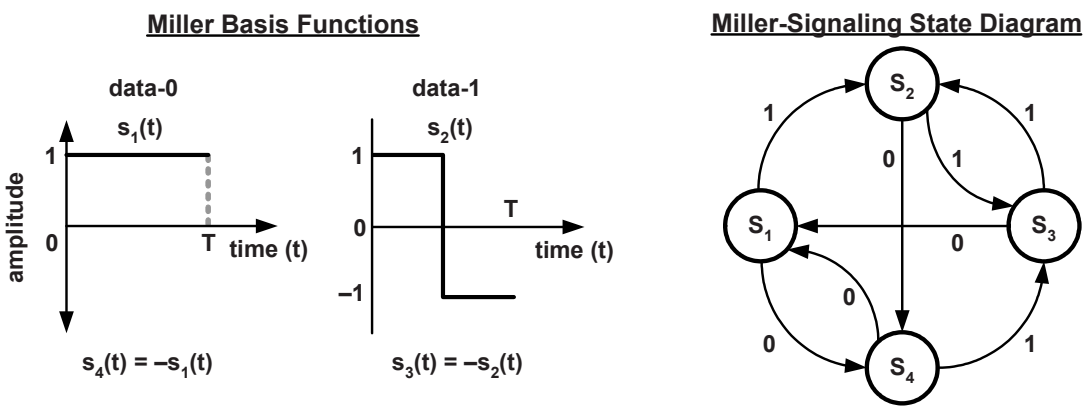

Figure 12 — Miller basis functions and generator state diagram

© ISO/IEC 2013 – All rights reserved
Documents
Document Sharing Hub
Full document details: BS ISO/IEC 18000-63:2013

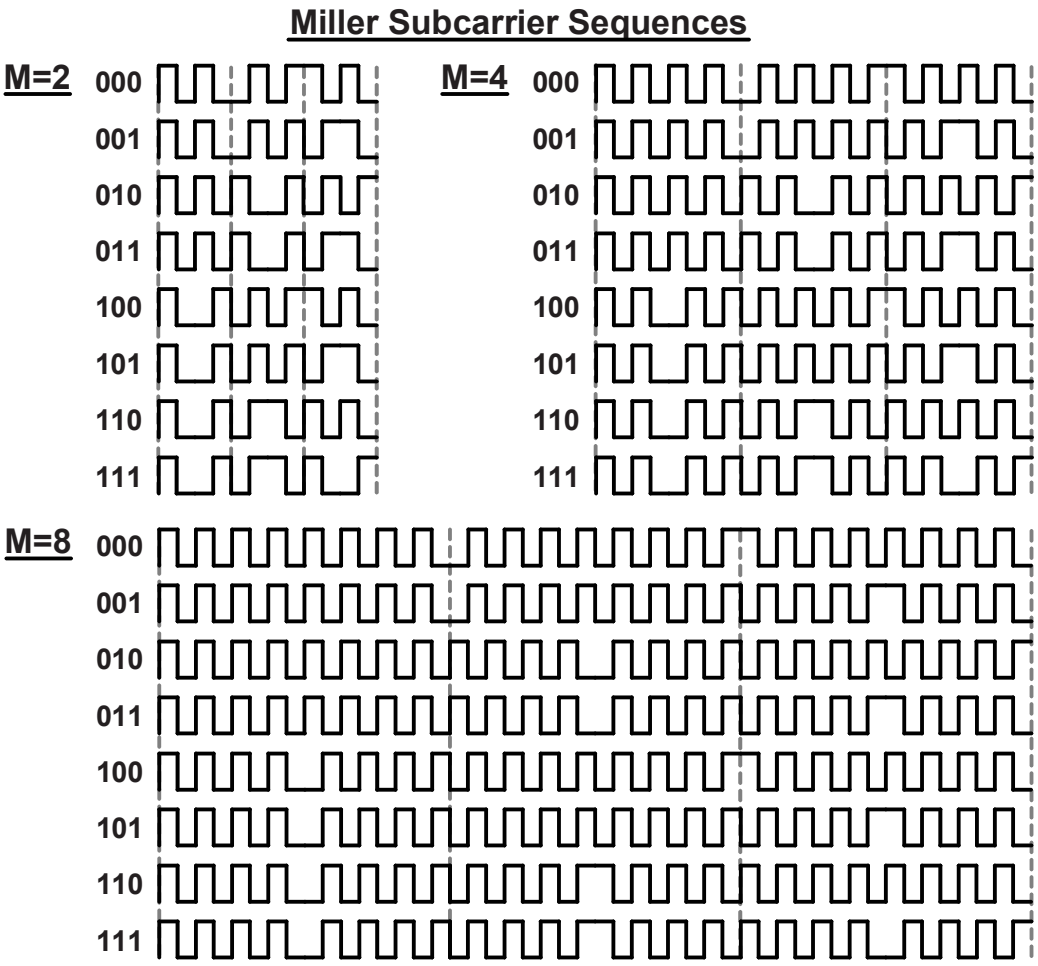

Figure 13 — Subcarrier sequences

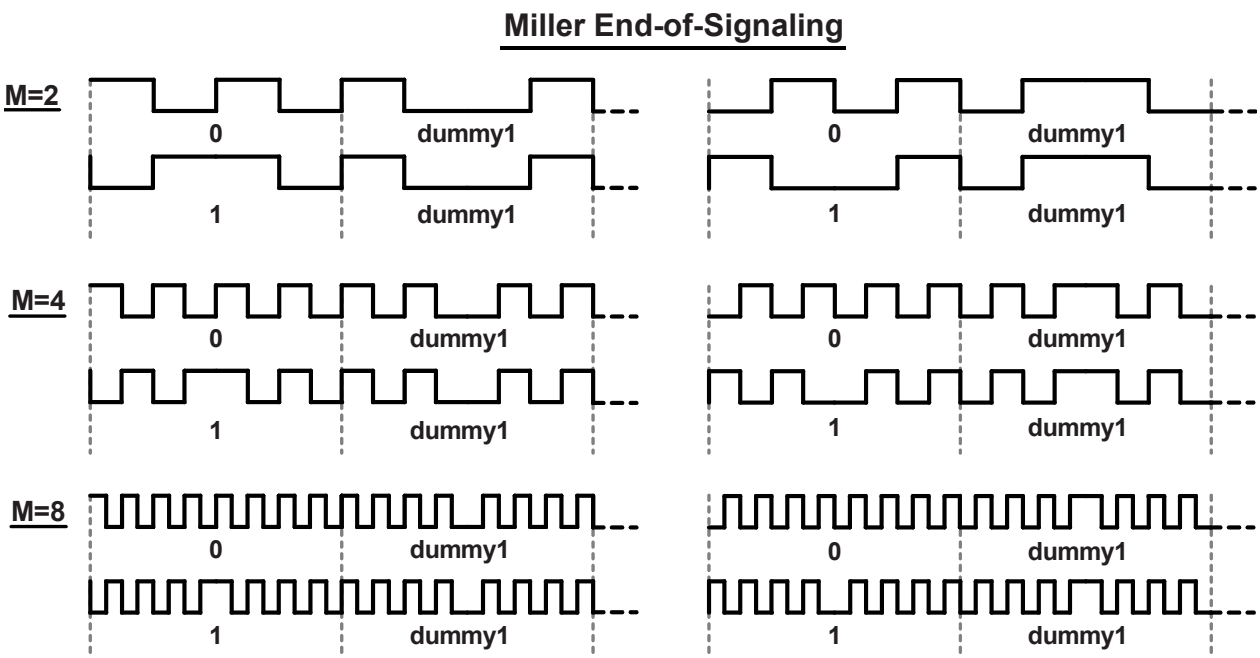

Figure 14 — Terminating subcarrier transmissions

© ISO/IEC 2013 – All rights reserved

Documents
Document Sharing Hub
Full document details: BS ISO/IEC 18000-63:2013

6.4.1.3.2.4 Miller subcarrier preamble

T=>R subcarrier signalling shall begin with one of the two preambles shown in Figure 15. The choice depends on the value of the TRext bit specified in the *Query* command that initiated the inventory round, unless a tag is replying to a command that writes to memory, in which case a tag shall use the extended preamble regardless of TRext (i.e. the tag replies as if TRext=1 regardless of the TRext value specified in the *Query*—see 6.4.2.11.3).

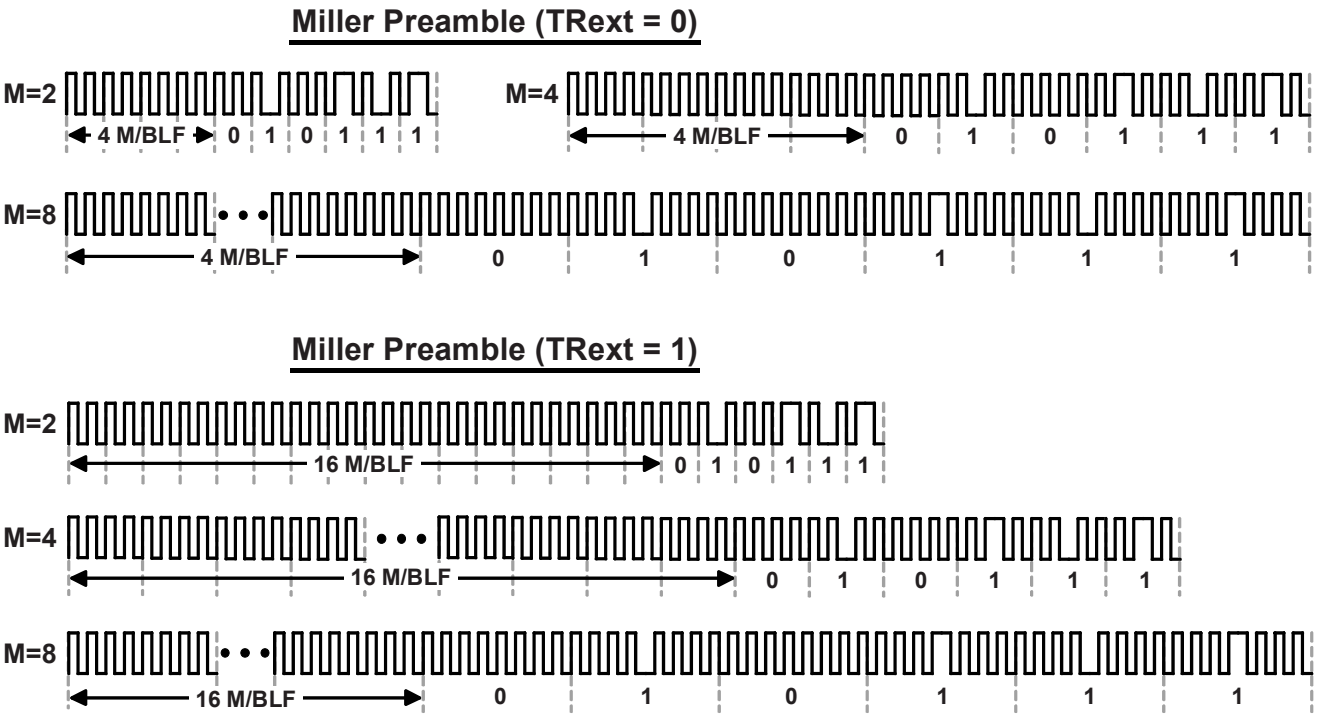

Figure 15 — Subcarrier T=>R preamble

6.4.1.3.3 Tag supported Tari values and backscatter link rates

Tags shall support all R=>T Tari values in the range of 6.25μs to 25μs, over all parameters allowed by 6.4.1.2.3.

Tags shall support the T=>R link frequencies and tolerances specified in Table 9, and the T=>R data rates specified in Table 10. The frequency-variation requirement in Table 9 includes both frequency drift and short-term frequency variation during tag response to an Interrogator command. The *Query* command that initiates an inventory round specifies DR in Table 9 and M in Table 10; the preamble that precedes the *Query* specifies TRcal. BLF is computed using Eq. (1). These four parameters together define the backscatter frequency, modulation type (FM0 or Miller), and T=>R data rate for the round (see also 6.4.1.2.8).

© ISO/IEC 2013 – All rights reserved
Documents
Document Sharing Hub
Full document details: BS ISO/IEC 18000-63:2013

Table 9 — Tag-to-Interrogator link frequencies

DR: Divide Ratio	TRcal [a] (µs +/– 1%)	BLF: Link Frequency (kHz)	Frequency Tolerance FT (-25 °C to 40 °C)	Frequency Tolerance FT (-40 °C to 65 °C)	Frequency variation during backscatter
64/3	33.3	640	+ / – 15%	+ / – 15%	+ / – 2.5%
	33.3 < TRcal < 66.7	320 < BLF < 640	+ / – 22%	+ / – 22%	+ / – 2.5%
	66.7	320	+ / – 10%	+ / – 15%	+ / – 2.5%
	66.7 < TRcal < 83.3	256 < BLF < 320	+ / – 12%	+ / – 15%	+ / – 2.5%
	83.3	256	+ / – 10%	+ / – 10%	+ / – 2.5%
	83.3 < TRcal ≤ 133.3	160 ≤ BLF < 256	+ / – 10%	+ / – 12%	+ / – 2.5%
	133.3 < TRcal ≤ 200	107 ≤ BLF < 160	+ / – 7%	+ / – 7%	+ / – 2.5%
	200 < TRcal ≤ 225	95 ≤ BLF < 107	+ / – 5%	+ / – 5%	+ / – 2.5%
8	17.2 ≤ TRcal < 25	320 < BLF ≤ 465	+ / – 19%	+ / – 19%	+ / – 2.5%
	25	320	+ / – 10%	+ / – 15%	+ / – 2.5%
	25 < TRcal < 31.25	256 < BLF < 320	+ / – 12%	+ / – 15%	+ / – 2.5%
	31.25	256	+ / – 10%	+ / – 10%	+ / – 2.5%
	31.25 < TRcal < 50	160 < BLF < 256	+ / – 10%	+ / – 10%	+ / – 2.5%
	50	160	+ / – 7%	+ / – 7%	+ / – 2.5%
	50 < TRcal ≤ 75	107 ≤ BLF < 160	+ / – 7%	+ / – 7%	+ / – 2.5%
	75 < TRcal ≤ 200	40 ≤ BLF < 107	+ / – 4%	+ / – 4%	+ / – 2.5%

A Allowing two different TRcal values (with two different DR values) to specify the same BLF offers flexibility in specifying Tari and RTcal.

Table 10 — Tag-to-Interrogator data rates

M: Number of subcarrier cycles per symbol	Modulation type	Data rate (kbit/s)
1	FM0 baseband	BLF
2	Miller subcarrier	BLF/2
4	Miller subcarrier	BLF/4
8	Miller subcarrier	BLF/8

NOTE The M values supported by the specified commands are specified with the commands.

6.4.1.3.4 Tag power-up timing

Tags energized by an Interrogator shall be capable of receiving and acting on Interrogator commands within a period not exceeding the maximum settling-time interval specified in Table 6 or Table 8, as appropriate (i.e. by the end of within T_s or T_{hs}, respectively).

© ISO/IEC 2013 – All rights reserved

Documents
Document Sharing Hub
Full document details: BS ISO/IEC 18000-63:2013

6.4.1.3.5 Minimum operating field strength and backscatter strength

The tag manufacturer shall specify:

— the free-space sensitivity,

— the minimum relative backscattered modulated power (ASK modulation) or change in radar cross-section or equivalent (phase modulation), and

— the manufacturer's normal operating conditions,

for the tag mounted on one or more manufacturer-selected materials.

Information about the measurement of those parameters is provided in ISO/IEC 18046-3.

6.4.1.4 Transmission order

The transmission order for all R=>T and T=>R communications shall be most-significant bit (MSB) first.

Within each message, the most-significant word shall be transmitted first.

Within each word, the MSB shall be transmitted first.

6.4.1.5 Cyclic Redundancy Check (CRC)

A CRC is a cyclic-redundancy check that a tag uses to ensure the validity of certain R=>T commands, and an Interrogator uses to ensure the validity of certain backscattered T=>R replies. This International Standard uses two CRC types: (i) a CRC-16 and (ii) a CRC-5. Annex F describes both CRC types.

To generate a CRC-16 a tag or Interrogator shall first generate the CRC-16 precursor shown in Table 11, and then take the ones-complement of the generated precursor to form the CRC-16.

A tag or Interrogator shall verify the integrity of a received message that uses a CRC-16. The tag or Interrogator may use of the methods described in Annex F to verify the CRC-16.

At powerup, a Tag calculates and saves into memory a 16-bit StoredCRC - See 6.4.2.10.

Tags shall append a CRC-16 to those replies that use a CRC-16. – See 6.4.2.10 for command specific reply formats.

To generate a CRC-5 an Interrogator shall use the definition in Table 12.

A tag shall verify the integrity of a received message that uses a CRC-5. The tag may use the method as described in Annex F to verify a CRC-5.

Interrogator shall append the appropriate CRC to R=>T transmissions as specified in Table 19.

Table 11 — CRC-16 precursor

CRC-16 precursor				
CRC Type	**Length**	**Polynomial**	**Preset**	**Residue**
ISO/IEC 13239	16 bits	$x^{16} + x^{12} + x^5 + 1$	**$FFFF_h$**	**$1D0F_h$**

Table 12 — CRC-5 definition

CRC-5 Definition				
CRC Type	**Length**	**Polynomial**	**Preset**	**Residue**
—	5 bits	$x^5 + x^3 + 1$	01001_2	00000_2

© ISO/IEC 2013 – All rights reserved
Documents
Document Sharing Hub
Full document details: BS ISO/IEC 18000-63:2013

6.4.1.6 Link timing

Figure 16 illustrates R=>T and T=>R link timing. The figure (not drawn to scale) defines Interrogator interactions with a tag population. Table 13 shows the timing requirements for Figure 16, while 6.4.2.10 describes the commands. Tags and Interrogators shall meet all timing requirements shown in Table 13. RTcal is defined in 6.4.1.2.8; T_{pri} is the T=>R link period (T_{pri} = 1 / BLF). As described in 6.4.1.2.8, an Interrogator shall use a fixed R=>T link rate for the duration of an inventory round; prior to changing the R=>T link rate, an Interrogator shall transmit CW for a minimum of 8 RTcal.

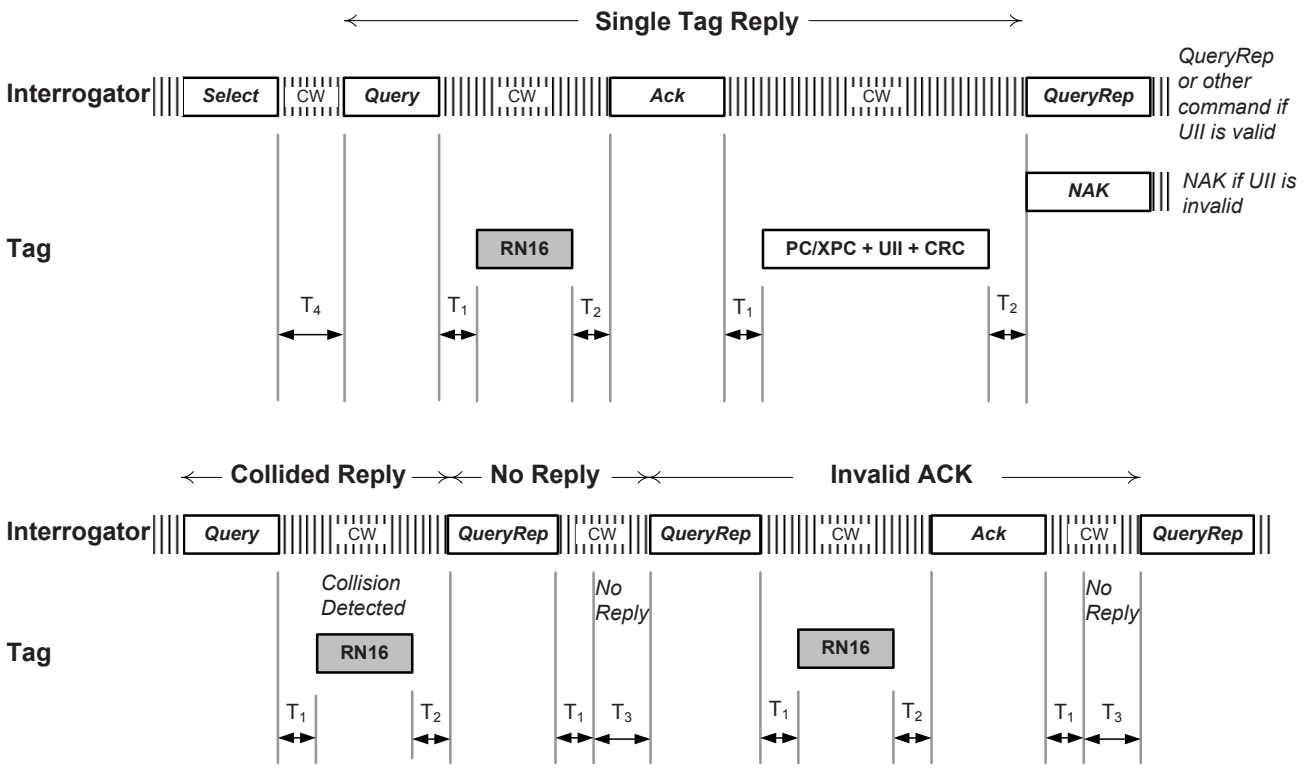

Figure 16 — Link timing

Table 13 — Link timing parameters

Parameter	Minimum	Nominal	Maximum	Description
T_1	MAX(RTcal,10T_{pri}) × (1 – |FT|) – 2μs	MAX(RTcal,10T_{pri})	MAX(RTcal,10T_{pri}) × (1 + |FT|) + 2μs	Time from Interrogator transmission to tag response (specifically, the time from the last rising edge of the last bit of the Interrogator transmission to the first rising edge of the tag response), measured at the tag's antenna terminals.
T_2	3.0T_{pri}		20.0T_{pri}	Interrogator response time required if a tag is to demodulate the Interrogator signal, measured from the end of the last (dummy) bit of the tag response to the first falling edge of the Interrogator transmission.
T_3	0.0T_{pri}			Time an Interrogator waits, after T_1, before it issues another command
T_4	2.0 RTcal			Minimum time between Interrogator commands

© ISO/IEC 2013 – All rights reserved

Documents
Document Sharing Hub
Full document details: BS ISO/IEC 18000-63:2013

The following items apply to the requirements specified in Table 13:

1) T_{pri} denotes either the commanded period of an FM0 symbol or the commanded period of a single subcarrier cycle, as appropriate.

2) A tag may exceed the maximum value for T_1 when responding to commands that write to memory — see, for example, 6.4.2.11.3.3.

3) The maximum value for T_2 shall apply only to tags in the **reply** or **acknowledged** states (see 6.4.2.4.3 and 6.4.2.4.4). For a tag in the **reply** or **acknowledged** states, if T_2 expires (i.e. reaches its maximum value):

   — Without the tag receiving a valid command, the tag shall transition to the **arbitrate** state (see 6.4.2.4.2).

   — During the reception of a valid command, the tag shall execute the command.

   — During the reception of an invalid command, the tag shall transition to **arbitrate** upon determining that the command is invalid.

   — In all other states the maximum value for T_2 shall be unrestricted. A tag shall be allowed a tolerance of 20.0Tpri < T2(max) < 32Tpri in determining whether T2 has expired. “Invalid command” is defined in 6.4.2.11.

4) An Interrogator may transmit a new command prior to interval T_2 (i.e. during a tag response). In this case the responding tag is not required to demodulate or otherwise act on the new command, and may undergo a power-on reset.

5) FT is the frequency tolerance specified in Table 9.

6) T_1+T_3 shall not be less than T_4.

6.4.2 Tag selection, inventory, and access

Tag selection, inventory, and access may be viewed as the lowest level in the data link layer of a layered network communication system.

6.4.2.1 Tag memory

Tag memory shall be logically separated into four distinct banks, each of which may comprise zero or more memory words. A logical memory map is shown in Figure 17. The memory banks are:

— **Reserved memory** shall contain the kill and/or access passwords, if passwords are implemented on the tag. The kill password shall be stored at memory addresses 00_h to $1F_h$; the access password shall be stored at memory addresses 20_h to $3F_h$. See 6.4.2.1.1.

— **UII memory** shall contain a StoredCRC at memory addresses 00_h to $0F_h$, a StoredPC at addresses 10_h to $1F_h$, a code (such as an UII, and hereafter referred to as an UII) that identifies the object to which the tag is or will be attached beginning at address 20_h, and if the tag implements recommissioning (see 6.4.2.1.2) or supports sensors and batteries (see Clause 7) then an Extended Protocol Control word XPC_W1 and an optional Extended Protocol word XPC_W2 (reserved for future use) beginning at address 210_h.

— **TID memory** shall contain an 8-bit ISO/IEC 15963 allocation class identifier at memory locations 00_h to 07_h. TID memory shall contain sufficient identifying information above 07_h for an Interrogator to uniquely identify the custom commands and/or optional features that a tag supports. See 6.4.2.1.3.

— **User memory** is optional. See 6.4.2.1.4.

© ISO/IEC 2013 – All rights reserved
Documents
Document Sharing Hub
Full document details: BS ISO/IEC 18000-63:2013

The logical addressing of all memory banks shall begin at zero (00_h). The physical memory map is vendor-specific. Commands that access memory have a MemBank parameter that selects the bank, and an address parameter, specified using the EBV format described in Annex A, to select a particular memory location within that bank. When tags backscatter memory contents, this backscatter shall fall on word boundaries (except in the case of a truncated reply – see 6.4.2.11.1.1).

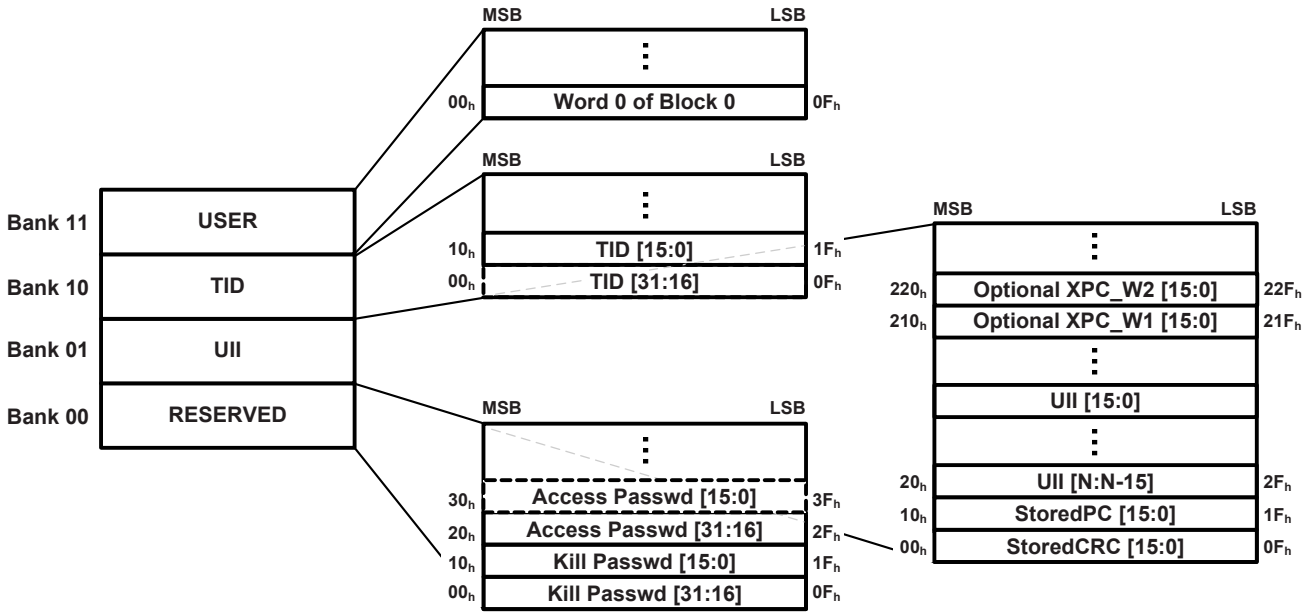

Figure 17 — Logical memory map

NOTE Although Figure 17 uses bit level addressing for illustration, read and write access can only done by addressing on 16-bit word level.

MemBank is defined as follows:

00_2 Reserved
01_2 UII
10_2 TID
11_2 User

Operations in one logical memory bank shall not access memory locations in another bank.

Memory writes, detailed in 6.4.2.9, involve the transfer of 16-bit words from Interrogator to tag. A *Write* command writes 16 bits (i.e. one word) at a time, using link cover-coding to obscure the data during R=>T transmission. The optional *BlockWrite* command writes one or more 16-bit words at a time, without link cover-coding. The optional *BlockErase* command erases one or more 16-bit words at a time. A *Write*, *BlockWrite*, or *BlockErase* shall not alter a tag's killed status regardless of the memory word address (whether valid or invalid) specified in the command.

Interrogators may lock, permanently lock, unlock, or permanently unlock the kill password, access password, UII memory, TID memory, and User memory, thereby preventing or allowing subsequent changes (as appropriate). A tag may optionally have its User memory partitioned into blocks; if it does, then an Interrogator may permanently lock these individual blocks. Recommissioning may alter the memory locking and/or permalocking. See 6.4.2.9 for a description of memory locking and unlocking, and 6.4.2.10 for a description of tag recommissioning. If the kill and/or access passwords are locked they are usable by only the *Kill* and *Access* commands, respectively, and are rendered both unwriteable and unreadable by any other command. Locking or permanently locking the UII, TID, or User memory banks, or permanently locking blocks within the User memory bank, renders the locked memory location unwriteable but leaves it readable.

© ISO/IEC 2013 – All rights reserved

Documents
Document Sharing Hub
Full document details: BS ISO/IEC 18000-63:2013

6.4.2.1.1 Reserved memory bank

Reserved memory contains the kill (see 6.4.2.1.1.1) and/or access (see 6.4.2.1.1.2) passwords, if passwords are implemented on the tag. If a tag does not implement the kill and/or access password(s), the tag shall logically operate as though it has zero-valued password(s) that are permanently read/write locked (see 6.4.2.11.3.5), and the corresponding physical memory locations in Reserved memory need not exist.

6.4.2.1.1.1 Kill password

The kill password is a 32-bit value stored in Reserved memory 00_h to $1F_h$, MSB first. The default (unprogrammed) value shall be zero. An Interrogator may use the kill password to (1) recommission a tag, and/or (2) kill a tag and render it nonresponsive thereafter. A tag shall not execute a recommissioning or kill operation if its kill password is zero. A tag that does not implement a kill password operates as if it has a zero-valued kill password that is permanently read/write locked.

6.4.2.1.1.2 Access password

The access password is a 32-bit value stored in Reserved memory 20_h to $3F_h$, MSB first. The default (unprogrammed) value shall be zero. A tag with a nonzero access password shall require an Interrogator to issue this password before transitioning to the **secured** state. A tag that does not implement an access password operates as if it has a zero-valued access password that is permanently read/write locked.

6.4.2.1.2 UII memory bank

UII memory contains a StoredCRC-16 at memory addresses 00_h to $0F_h$, a StoredPC at memory locations 10_h to $1F_h$, and a UII beginning at address 20_h, and if a tag implements recommissioning then a first XPC word (XPC_W1) at 210_h to $21F_h$ and an optional second XPC word (XPC_W2) at 220_h to $22F_h$. If the tag supports sensors and batteries according to Clauses 7 and 8 then bit-based information is encoded in the first XPC word XPC_W1 at addresses 214_h to 219_h. Refer to 7.6.2 for an overview about PC and XPC_W1 bit definitions. The StoredCRC, StoredPC, UII, and XPC word or words shall be stored MSB first (i.e. the UII's MSB is stored in location 20_h).

The StoredCRC-16 is described in 6.4.2.1.2.1

The StoredPC, as described in 6.4.2.1.2.2, is subdivided into a UII length field in memory locations 10_h to 14_h, a User-memory indicator (UMI) in location 15_h, an XPC indicator (XI) in location 16_h, and a Numbering System Identifier (NSI) in memory locations 17_h to $1F_h$.

The UII is a code that identifies the object to which a tag is affixed. The UII for EPCglobal Applications is described in 6.4.2.1.2.3; the UII for ISO Applications is described in 6.4.2.1.2.4. Interrogators may issue a *Select* command that includes all or part of the UII in the mask. Interrogators may issue an *ACK* command to cause a Tag to backscatter its UII. Under certain circumstances the Tag may truncate its backscattered UII (see 6.4.2.11.1.1). An Interrogator may issue a *Read* command to read all or part of the UII.

The first XPC word XPC_W1, as described in 6.4.2.1.2.2, 6.4.2.1.2.5 and 7.6.2, indicates whether and how a Tag has been recommissioned and/or supports sensors and batteries.

6.4.2.1.2.1 CRC-16 (StoredCRC and PacketCRC)

All Tags shall implement a StoredCRC. Tags that support XPC functionality shall also implement a PacketCRC.

The PC and the UII are protected by the StoredCRC that a Tag backscatters during an inventory operation if PC bits and UII are transmitted to the Interrogator and no additional data, e.g. XPC, is included in the Tag response.

Because Interrogators may issue a *Select* command that includes all or part of this CRC-16 in the mask, and may issue a *Read* command to cause the Tag to backscatter this CRC-16, this CRC-16 is logically mapped

© ISO/IEC 2013 – All rights reserved
Documents
Document Sharing Hub
Full document details: BS ISO/IEC 18000-63:2013

into UII memory. At power-up a Tag shall compute this CRC-16 over (a) the StoredPC and (b) UII specified by the length field in the StoredPC (see 6.4.2.1.2.2) and shall map the computed CRC-16 into UII memory 00_h to $0F_h$, MSB first. Because the {PC+ XPC + UII} is stored in UII memory on word boundaries, this CRC-16 shall be computed on word boundaries. Although Tags include the XI value in the StoredPC in their StoredCRC calculation, regardless of XI value a Tag shall omit XPC_W1 and XPC_W2 from the calculation. A Tag shall finish its StoredCRC computation and memory mapping by the end of interval T_s or T_{hs} (as appropriate) in Figure 3 or Figure 5, respectively. Tags shall not recalculate this CRC-16 for a truncated reply (see 6.4.2.11.1.1).

Table 14 — Tag data and CRC-16 backscattered in response to an ACK command

XI [1]	XEB[1]	Truncation	Tag Backscatter			
			PC	XPC	UII	CRC-16
0	0	Deasserted	StoredPC	None	Full	StoredCRC or PacketCRC
0	0	Asserted	00000_2	None	Truncated	StoredCRC
0	1	Deasserted	Invalid[1]			
0	1	Asserted	Invalid[1]			
1	0	Deasserted	PacketPC	XPC_W1	Full	PacketCRC
1	0	Asserted	00000_2	None	Truncated	StoredCRC
1	1	Deasserted	PacketPC	Both XPC_W1 and XPC_W2	Full	PacketCRC
1	1	Asserted	00000_2	None	Truncated	StoredCRC
[1] See NOTE 1						

NOTE 1 XI is the bitwise logical OR of the 16 bits of XPC_W1, and XEB is the MSB (bit F_h) of XPC_W1, so if XEB=1 then XI=1.

In response to an *ACK* command a Tag backscatters a protocol-control (PC) word (either StoredPC or PacketPC – see 6.4.2.1.2.2), optional XPC word or words (see 6.4.2.1.2.5), UII (see 6.4.2.1.2.3 and 6.4.2.1.2.4), and a CRC-16 that protects the backscattered data. The CRC-16 shall be either (a) the StoredCRC or, alternatively, (b) a PacketCRC that the Tag shall calculate dynamically over the backscattered PC word, optional XPC word or words, and UII. Whether a Tag backscatters its StoredCRC or a PacketCRC shall be as defined in Table 14, depending on the Tag's XI value and whether truncation (see 6.4.2.11.1.1) is asserted or deasserted. Moreover, a PacketCRC shall be used instead of the StoredCRC when a Tag response includes Simple Sensor Data (see 8.3).

Tags that do not support XPC functionality may, but are not required to, implement a PacketCRC.

A Tag shall backscatter its CRC MSB first, regardless of the CRC type.

If XI is asserted then a Tag's PacketCRC is different from its StoredCRC.

As required by 6.4.1.5 an Interrogator shall verify, using a Tag's backscattered CRC-16, the integrity of a received PC word, optional XPC word or words, and UII.

6.4.2.1.2.2 Protocol-control (PC) word (StoredPC and PacketPC)

The PC word contains physical-layer information that a Tag backscatters with its UII during an inventory operation. All Tags shall implement a StoredPC whose fields, comprising UII length, a UMI, an XI, and an NSI, shall be as defined below. Tags that support XPC functionality shall also implement a PacketPC that differs from the StoredPC in its UII length field. The type of PC (StoredPC or PacketPC) that a Tag backscatters in response to an *ACK* shall be as defined in Table 14.

© ISO/IEC 2013 – All rights reserved

Documents
Document Sharing Hub
Full document details: BS ISO/IEC 18000-63:2013

There are 16 PC bits, stored in UII memory at addresses 10_h to $1F_h$, with bit values defined as follows:

Bits 10_h – 14_h: The length of the UII that a Tag backscatters, in words:

00000_2: Zero words.
00001_2: One word (addresses 20h to 2Fh in UII memory).
00010_2: Two words (addresses 20h to 3Fh in UII memory).
•
•
•
11111_2: 31 words (addresses 20h to 20Fh in UII memory).

If a Tag does not support XPC functionality then the maximum value of the UII length field in the StoredPC shall be 11111_2 (allows a 496-bit UII), as shown above. If a Tag supports XPC functionality then the maximum value of the UII length field in the StoredPC shall be 11101_2 (allows a 464-bit UII). A Tag that supports XPC functionality shall ignore a Write or *BlockWrite* command to the StoredPC if the UII length field exceeds 11101_2, and shall instead backscatter an error code (see Annex I).

- Bit 15_h: A User-memory indicator (UMI). If bit 15_h is deasserted then the Tag either does not implement User memory or User memory contains no information. If bit 15_h is asserted then User memory contains information. A Tag may implement the UMI using Method 1 or Method 2 described below, unless the Tag implements block permalocking and/or recommissioning, in which case the Tag shall use Method 1.
  - Method 1: The Tag computes the UMI. At powerup, and prior to calculating its StoredCRC (see 6.4.2.1.2.1), the Tag shall compute the logical OR of bits 03_h to 07_h of User memory and map the computed value into bit 15_h. The Tag shall include the computed UMI value in its StoredCRC calculation (see 6.4.2.1.2.1). If an Interrogator modifies any of bits 03_h to 07_h of User memory then the Tag shall recompute and remap its UMI into bit 15_h. If recommissioning renders User memory inaccessible (see 6.4.2.10) then the Tag shall deassert and remap its UMI into bit 15_h. After remapping the UMI the StoredCRC may be incorrect until the Interrogator power cycles the Tag. The UMI shall not be directly writeable by an Interrogator — when an Interrogator writes the StoredPC, the Tag shall ignore the data value that the Interrogator provides for bit 15_h.
  - Method 2: An Interrogator writes the UMI. If an Interrogator writes a zero value into bits 03_h to 07_h of User memory then it shall deassert bit 15_h. If an Interrogator writes a nonzero value into 03_h to 07_h of User memory then it shall assert bit 15_h. If an Interrogator locks or permalocks UII memory then it shall also lock or permalock, respectively, the word located at address 00_h of User memory, and vice versa. This latter requirement ensures that a condition in which User memory previously contained data but was subsequently erased does not cause a Tag to wrongly indicate the presence of User memory, and vice versa.

NOTE In case the UMI bit is implemented as described in Method 1, then its value will change in dependence of bits 03_h to 07_h of the User Memory independent of whether the UII memory is locked or not.

Bit 16_h: An XPC_W1 indicator (XI). If bit 16_h is deasserted then the Tag either does not implement an XPC_W1 or the XPC_W1 is zero-valued, in which case the Tag shall backscatter its StoredPC or PacketPC, but not an XPC_W1, in response to an *ACK* (see Table 14). If bit 16_h is asserted then the Tag implements an XPC_W1 and one or more bits of XPC_W1 have nonzero values. In this latter case the Tag shall backscatter its XPC_W1 immediately after the StoredPC or PacketPC during inventory.

If a Tag implements an XPC_W1 then at powerup, and prior to calculating its StoredCRC (see 6.4.1.5), the Tag shall compute the bitwise logical OR of its XPC_W1 and map the computed value into bit 16h (i.e. into the XI). A Tag shall use this computed XI value in its StoredCRC calculation. If an Interrogator recommissions the Tag (see 6.4.2.10) then the Tag shall recompute and remap its XI into bit 16h after recommissioning. After recomputing the XI the StoredCRC may be incorrect until the Interrogator power cycles the Tag. The XI bit shall not be directly writeable by an Interrogator — when an Interrogator writes the StoredPC the Tag shall ignore the data value that the Interrogator provides for bit 16h. If an Interrogator reads the PC word using a *Read* command (see 6.4.2.11.3.2) then the Tag's response shall include the XI computed at powerup. If an Interrogator issues a *Select* command (see 6.4.2.11.1.1) with a Mask that includes the XI then the Tag shall use the XI value computed at powerup when determining if Mask is matching or non-matching.

© ISO/IEC 2013 – All rights reserved
Documents
Document Sharing Hub
Full document details: BS ISO/IEC 18000-63:2013