BS ISO/IEC 18046-3:2012

BSI Standards Publication

Information technology — Radio frequency identification device performance test methods

Part 3: Test methods for tag performance

bsi.

...making excellence a habit.™

Document Sharing Hub

Full document details: BS ISO/IEC 18046-3:2012

National foreword

This British Standard is the UK implementation of ISO/IEC 18046-3:2007. It supersedes BS ISO/IEC 18046-3:2007 which is withdrawn.

The UK participation in its preparation was entrusted to Technical Committee IST/34, Automatic identification and data capture techniques.

A list of organizations represented on this committee can be obtained on request to its secretary.

This publication does not purport to include all the necessary provisions of a contract. Users are responsible for its correct application.

© The British Standards Institution 2013.
Published by BSI Standards Limited 2013

ISBN 978 0 580 77542 0

ICS 35.040

Compliance with a British Standard cannot confer immunity from legal obligations.

This British Standard was published under the authority of the Standards Policy and Strategy Committee on 31 January 2013.

Amendments issued since publication

Date	Text affected

Documents
Document Sharing Hub

Full document details: BS ISO/IEC 18046-3:2012

INTERNATIONAL STANDARD

ISO/IEC 18046-3

Second edition
2012-08-01

Information technology — Radio frequency identification device performance test methods —

Part 3: Test methods for tag performance

Technologies de l'information — Méthodes d'essai des performances du dispositif d'identification par radiofréquence —

Partie 3: Méthodes d'essai des perfomances du tag

Reference number
ISO/IEC 18046-3:2012(E)

Documents
Document Sharing Hub

© ISO/IEC 2012

Full document details: BS ISO/IEC 18046-3:2012

COPYRIGHT PROTECTED DOCUMENT

© ISO/IEC 2012

All rights reserved. Unless otherwise specified, no part of this publication may be reproduced or utilized in any form or by any means, electronic or mechanical, including photocopying and microfilm, without permission in writing from either ISO at the address below or ISO's member body in the country of the requester.

ISO copyright office
Case postale 56 • CH-1211 Geneva 20
Tel. + 41 22 749 01 11
Fax + 41 22 749 09 47
E-mail copyright@iso.org
Web www.iso.org

Published in Switzerland

© ISO/IEC 2012 – All rights reserved

Documents
Document Sharing Hub

Full document details: BS ISO/IEC 18046-3:2012

Contents

Page

Foreword v

Introduction vi

1 Scope 1

2 Normative references 1

3 Terms and definitions 2

4 Symbols and abbreviated terms 2

5 Conditions applicable to the test methods 2
5.1 Number of tags to be tested 2
5.2 Test environment 3
5.3 RF environment 3
5.4 Pre-conditioning 3
5.5 Default tolerance 3
5.6 Total measurement uncertainty 3
5.7 Test result reporting 3
5.8 Test mounting material 3
5.9 Test communication parameters 3
5.10 Test equipment limits 4
5.11 Human exposure to EMF 4

6 Setup of test equipment for tag test 4
6.1 Test apparatus and test circuits for ISO/IEC 18000-2 tags 4
6.2 Test apparatus and test circuits for ISO/IEC 18000-3 tags 4
6.3 Test apparatus and test circuits for ISO/IEC 18000-6 tags 4
6.4 Test apparatus and test circuits for ISO/IEC 18000-7 tags 5

7 Functional tests for inductive tags as defined in ISO/IEC 18000-2 and ISO/IEC 18000-3 and ISO/IEC 18000-6 6
7.1 Identification magnetic field threshold ($H_{THR\ Identification}$) 6
7.2 Reading magnetic field threshold ($H_{THR\ Read}$) 8
7.3 Writing magnetic field threshold ($H_{THR\ Write}$) 10
7.4 Maximum operating magnetic field (H_{max}) 12
7.5 Survival magnetic field ($H_{Survival}$) 13
7.6 Load modulation (L_m) 14

8 Functional tests for propagative tags as defined in ISO/IEC 18000-6 17
8.1 Identification electromagnetic field threshold ($E_{THR\ Identification}$) and frequency peak(s) 17
8.2 Reading electromagnetic field threshold ($E_{THR\ Read}$) 18
8.3 Writing electromagnetic field threshold ($E_{THR\ Write}$) 20
8.4 Sensitivity degradation ($S_{Degradation}$) 21
8.5 Maximum operating electromagnetic field (E_{max}) 23
8.6 Survival electromagnetic field ($E_{Survival}$) 24
8.7 Delta radar cross section (ΔRCS) 26
8.8 Interference rejection ($I_{Rejection}$) 27
8.9 Maximum identification fade rate ($E_{Fade\ Identification}$) 29
8.10 Maximum write fade rate ($E_{Fade\ Write}$) 30

9 Functional tests for 433,920 MHz propagative tags as defined in ISO/IEC 18000-7 31
9.1 Identification electromagnetic field threshold ($E_{THR\ Identification}$) and frequency tolerance 31
9.2 Reading electromagnetic field threshold ($E_{THR\ Read}$) and frequency tolerance 33
9.3 Writing electromagnetic field threshold ($E_{THR\ Write}$) 35
9.4 Sensitivity Directivity ($S_{Directivity}$) 36

Documents
Document Sharing Hub

© ISO/IEC 2012 – All rights reserved

Full document details: BS ISO/IEC 18046-3:2012

9.5 Interference rejection ($I_{Rejection}$) 39
9.6 Maximum operating electromagnetic field (E_{max}) 42
9.7 Survival electromagnetic field ($E_{Survival}$) 43

Annex A (informative) **Resonant frequency and Q factor measurement for inductive tag 46**

Annex B (normative) **Test apparatus modification for ISO/IEC 18000-3 compliant tags for field strengths > 5 A/m 49**

Annex C (normative) **Test apparatus modification for ISO/IEC 18000-6 compliant tags 50**

Annex D (informative) **Inventory command for all parts of ISO/IEC 18000 ....52**

Bibliography 53

© ISO/IEC 2012 – All rights reserved

Documents
Document Sharing Hub

Full document details: BS ISO/IEC 18046-3:2012

Foreword

ISO (the International Organization for Standardization) and IEC (the International Electrotechnical Commission) form the specialized system for worldwide standardization. National bodies that are members of ISO or IEC participate in the development of International Standards through technical committees established by the respective organization to deal with particular fields of technical activity. ISO and IEC technical committees collaborate in fields of mutual interest. Other international organizations, governmental and non-governmental, in liaison with ISO and IEC, also take part in the work. In the field of information technology, ISO and IEC have established a joint technical committee, ISO/IEC JTC 1.

International Standards are drafted in accordance with the rules given in the ISO/IEC Directives, Part 2.

The main task of the joint technical committee is to prepare International Standards. Draft International Standards adopted by the joint technical committee are circulated to national bodies for voting. Publication as an International Standard requires approval by at least 75 % of the national bodies casting a vote.

ISO/IEC 18046-3 was prepared by Joint Technical Committee ISO/IEC JTC 1, *Information technology*, Subcommittee SC 31, *Automatic identification and data capture techniques*.

This second edition cancels and replaces the first edition (ISO/IEC 18046-3:2007) which has been technically revised.

ISO/IEC 18046 consists of the following parts, under the general title *Information technology — Radio frequency identification device performance test methods*:

— *Part 1: Test methods for system performance*

— *Part 2: Test methods for interrogator performance*

— *Part 3: Test methods for tag performance*

© ISO/IEC 2012 – All rights reserved

Documents
Document Sharing Hub
Full document details: BS ISO/IEC 18046-3:2012

Introduction

RFID technology has broad applicability to the Automatic Identification and Data Capture (AIDC) industry in item management. As a wireless communication technique based on Radio Frequency technology the applications cover multiple levels of the industrial, commercial and retail supply chains. These may include:

- Freight containers
- Returnable Transport Items (RTI)
- Transport units
- Product packaging
- Product tagging

Performance tests define test methods that deliver results that allow the comparison of different RFID systems, interrogator and tags in order to select among them for use in a particular application.

The performance characteristics of devices (tags and interrogation equipment) may vary drastically due to application factors as well as the particular RFID air interface (frequency, modulation, protocol, etc.) being supported. Of key concern is the matching of the various performance characteristics to the user application. Additionally, in an open environment users of such technology demand multiple sources for these devices from technology providers. A key challenge is a method of evaluating the differences between various technology providers' products in a consistent and equitable manner.

This International Standard provides a framework for meeting the above noted concern and challenges. To this end, clear definitions of performance as relate to user application of RFID technology in the supply chain are provided. Based on such application-based definitions test methods are defined with attention to the test parameters required for a consistent evaluation of RFID devices.

Of particular significance, these tests are defined for RFID devices having one antenna. It is common practice to have products with both single and multiple antennas to define an RFID transaction zone sufficient for the application. The defined methods can easily be extended from equipment with a single antenna to apply to equipment with multiple antennas, in order to evaluate performance under conditions more closely matching those of a particular application.

The International Organization for Standardization (ISO) and International Electrotechnical Commission (IEC) draw attention to the fact that it is claimed that compliance with this document may involve the use of patents.

The ISO and IEC take no position concerning the evidence, validity and scope of these patent rights.

The holder of this patent right has assured the ISO and IEC that he is prepared to grant a free license to an unrestricted number of applicants on a worldwide, non-discriminatory basis and under other reasonable terms and conditions to make, use, and sell RFID reader antenna design / patterns for implementations of this ISO/IEC International Standard, which is related to testing. In this respect, the statements of the holder of this patent right are registered with the ISO and IEC. Information may be obtained from the following company.

© ISO/IEC 2012 – All rights reserved
Documents
Document Sharing Hub
Full document details: BS ISO/IEC 18046-3:2012

Contact details	Patent number	Affected subclause(s) in this part of ISO/IEC 18046
Impinj inc 701 N. 34th Street, Suite 300 Seattle, WA 98103 Tel: 206/517-5300 Fax: 206/517-5262	Patent pending	6.3.2, 7.1.2.3, 7.3.2.3, 7.4.2.1, 7.5.2.1, 7.6.2.3

Attention is drawn to the possibility that some of the elements of this document may be the subject of patent rights other than those identified above. ISO and IEC shall not be held responsible for identifying any or all such patent rights.

The latest information on IP that may be applicable to this part of ISO/IEC 18046 can be found at www.iso.org/patents.

© ISO/IEC 2012 – All rights reserved

Documents
Document Sharing Hub
Full document details: BS ISO/IEC 18046-3:2012

Documents
Document Sharing Hub

Full document details: BS ISO/IEC 18046-3:2012

Information technology — Radio frequency identification device performance test methods —

Part 3:
Test methods for tag performance

1 Scope

This International Standard defines test methods for performance characteristics of RFID tags for item management, and specifies the general requirements and test requirements for tags which are applicable to the selection of the devices for an application. The summary of the test reports form a unified tag datasheet. It does not apply to testing in relation to regulatory or similar requirements.

2 Normative references

The following referenced documents are indispensable for the application of this document. For dated references, only the edition cited applies. For undated references, the latest edition of the referenced document (including any amendments) applies.

ISO/IEC 18000-1, *Information technology — Radio-frequency identification for item management — Part 1: Reference architecture and definition of parameters to be standardized*

ISO/IEC 18000-2, *Information technology — Radio-frequency identification for item management — Part 2: Parameters for air interface communications below 135 kHz*

ISO/IEC 18000-3, *Information technology — Radio-frequency identification for item management — Part 3: Parameters for air interface communications at 13,56 MHz*

ISO/IEC 18000-6, *Information technology — Radio-frequency identification for item management — Part 6: Parameters for air interface communications at 860 MHz to 960 MHz*

ISO/IEC 18000-7, *Information technology — Radio-frequency identification for item management — Part 7: Parameters for active air interface communications at 433 MHz*

ISO/IEC 18047-2, *Information technology — Radio frequency identification device conformance test methods — Part 2: Test methods for air interface communications below 135 kHz*

ISO/IEC TR 18047-3, *Information technology — Radio frequency identification device conformance test methods — Part 3: Test methods for air interface communications at 13,56 MHz*

ISO/IEC TR 18047-4, *Information technology — Radio frequency identification device conformance test methods — Part 4: Test methods for air interface communications at 2,45 GHz*

ISO/IEC TR 18047-6, *Information technology — Radio frequency identification device conformance test methods — Part 6: Test methods for air interface communications at 860 MHz - 960 MHz*

ISO/IEC TR 18047-7, *Information technology — Radio frequency identification device conformance test methods — Part 7: Test methods for air interface communications at 433 MHz*

Documents
Document Sharing Hub

© ISO/IEC 2012 – All rights reserved

Full document details: BS ISO/IEC 18046-3:2012

ISO/IEC 19762 (all parts), *Information technology — Automatic identification and data capture (AIDC) techniques — Harmonized vocabulary*

3 Terms and definitions

For the purposes of this document, the terms and definitions found in ISO/IEC 19762 apply.

4 Symbols and abbreviated terms

$H_{THR\ Identification}$	Identification magnetic field threshold
$H_{THR\ Read}$	Reading magnetic field threshold
$H_{THR\ Write}$	Writing magnetic field threshold
H_{max}	Maximum operating magnetic field
$H_{Survival}$	Survival magnetic field
Lm	Load Modulation
$E_{THR\ Identification}$	Identification electromagnetic field threshold
$E_{THR\ Read}$	Reading electromagnetic field threshold
$E_{THR\ Write}$	Writing electromagnetic field threshold
$S_{Degradation}$	Sensitivity degradation
E_{max}	Maximum operating electromagnetic field
$E_{Survival}$	Survival electromagnetic field
ΔRCS	Delta radar cross section
$I_{Rejection}$	Interference rejection
G	Antenna gain
D	Distance between the tag and the antenna
MPE	Maximum Permissible human Exposure
SAR	Specific Absorption Rate

5 Conditions applicable to the test methods

5.1 Number of tags to be tested

Unless otherwise specified, testing shall be performed on 30 randomly chosen tags among a population of 1000 functional tags.

© ISO/IEC 2012 – All rights reserved
Documents
Document Sharing Hub
Full document details: BS ISO/IEC 18046-3:2012

5.2 Test environment

Unless otherwise specified, testing shall take place in air environment of temperature 23 °C +/- 3 °C (73 °F +/- 5 °F) and of relative humidity 40 % to 60 %.

5.3 RF environment

The tests shall be performed in a known RF environment.

For measurements of propagative UHF tags (ISO/IEC 18000-6) an anechoic chamber is the recommended test environment.

For measurement of inductive tags at frequencies below 30 MHz a typical laboratory environment is sufficient, where consideration is given to minimize the impact of electromagnetic sources that may influence the results.

5.4 Pre-conditioning

Where pre-conditioning is required by the test method, the identification tags to be tested shall be conditioned to the test environment for a period of 24 hours before testing.

5.5 Default tolerance

Unless otherwise specified, a default tolerance of +/- 5 % shall be applied to the quantity values given to specify the characteristics of the test equipment (e.g. linear dimensions) and the test method procedures (e.g. test equipment adjustments).

5.6 Total measurement uncertainty

The total measurement uncertainty for each quantity determined by these test methods shall be stated in the test report.

NOTE Basic information is given in ISO/IEC Guide 98-3:2008.

5.7 Test result reporting

Each test result shall be reported with the number of samples, minimum value, maximum value, mean value and standard deviation.

For measurement curves additionally to the curves on minimum value, maximum value, mean value and standard deviation, the individual curves of 5 randomly selected measured devices shall be shown in a figure as well.

5.8 Test mounting material

For UHF tags, the tests may be performed with or without applied mounting material. When the mounting material is defined by the tag manufacturer, the tests shall be performed with the specified mounting material and in the free air.

If the dielectric parameter or other critical parameters of material are known they should be notified in the test report.

5.9 Test communication parameters

All the tests can be done for various communication parameters (forward and return link). The tests conditions must be recorded in the test report.

Documents
Document Sharing Hub

© ISO/IEC 2012 – All rights reserved

Full document details: BS ISO/IEC 18046-3:2012

5.10 Test equipment limits

Test equipment for survivability field maximum level shall be able to handle the maximum level declared by the product vendor. It shall be ensured that the test equipment is not limiting the performance measurement.

5.11 Human exposure to EMF

High magnetic or electromagnetic field strength may exceed the limits of maximum permissible human exposure to EMF, which should be considered accordingly. FCC guidelines for MPE and SAR or EC 1999/519/CE are examples for relevant documents.

6 Setup of test equipment for tag test

6.1 Test apparatus and test circuits for ISO/IEC 18000-2 tags

This clause defines the test apparatus and test circuits for verifying the operation of a tag according to the base standard ISO/IEC 18000-2. The test set-ups used shall be as described in ISO/IEC 18047-2.

6.2 Test apparatus and test circuits for ISO/IEC 18000-3 tags

This clause defines the test apparatus and test circuits for verifying the operation of a tag according to the base standard ISO/IEC 18000-3. The test set-ups used shall be as described in ISO/IEC 18047-3.

As the test apparatus described in ISO/IEC 18047-3 is only designed for a magnetic field strength up to 5 A/m the test set-ups as described in Annex B shall be used for magnetic field strength >5 A/m.

6.3 Test apparatus and test circuits for ISO/IEC 18000-6 tags

6.3.1 Propagative UHF tags measurement

This clause defines the test apparatus and test circuits for verifying the operation of a tag according to the base standard ISO/IEC 18000-6. The test set-up used for measurement of propagative UHF tags shall be described in ISO/IEC 18047-6.

6.3.1.1 Antenna polarization

For propagative UHF tests, a linear or circular polarized antenna shall be used, except when testing tags that have more than one antenna or for sensitivity degradation measurements, in which case a circular polarized antenna shall be used. The circularly polarized antenna shall have an axial ratio that is less than 1 dB over the frequency and orientation ranges of the testing.

© ISO/IEC 2012 – All rights reserved
Documents
Document Sharing Hub
Full document details: BS ISO/IEC 18046-3:2012

6.3.1.2 Test set-up for interference rejection measurement of propagative UHF tags

Figure 1 and Figure 2 show the test set-up arrangements for interference rejection measurement:

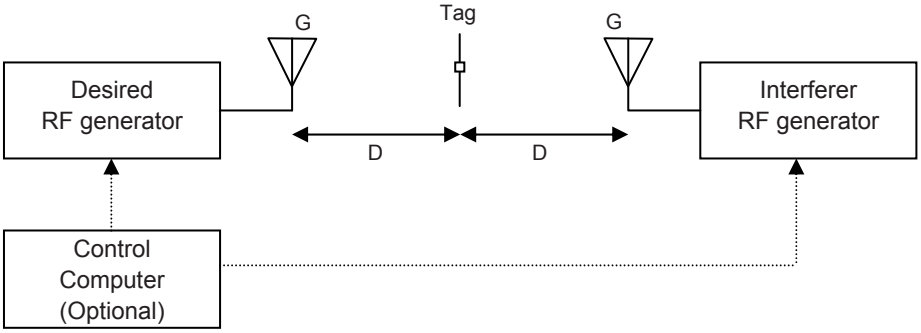

Figure 1 — Test set-up for interference rejection measurement

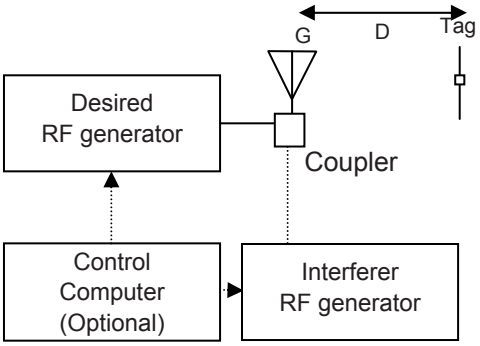

Figure 2 — Test set-up for interference rejection measurement

For this test, the tag under test shall be placed at the same distance D from the two RF generators and oriented for optimum field strength reception. The distance D shall be 0,8 – 1,1 m.

NOTE The distance of 0,8 – 1,1 m covers all values for 3 λ for the frequencies from 860-960 MHz.

The antennas shall have the same gain with a VSWR <1:2.

6.3.2 Inductive UHF tags measurement

This clause defines the test apparatus and test circuits for verifying the operation of a tag according to the base standard, ISO/IEC 18000-6. The test set-up used for measurement of inductive UHF tags is shown in Annex C.

6.4 Test apparatus and test circuits for ISO/IEC 18000-7 tags

This clause defines the test apparatus and test circuits for verifying the operation of a tag according to the base standard, ISO/IEC 18000-7. The test set-ups used shall be as described in ISO/IEC 18047-7.

© ISO/IEC 2012 – All rights reserved

Documents
Document Sharing Hub
Full document details: BS ISO/IEC 18046-3:2012

7 Functional tests for inductive tags as defined in ISO/IEC 18000-2 and ISO/IEC 18000-3 and ISO/IEC 18000-6

7.1 Identification magnetic field threshold ($H_{THR\ Identification}$)

7.1.1 Purpose

The purpose of this test is to determine the threshold level of magnetic field strength required for tag identification. As the tag needs energy to operate, it has to be supplied by the magnetic field. The identification magnetic field threshold, $H_{THR\ Identification}$, is the minimum field strength allowing tag identification.

7.1.2 Test procedure

At a fixed frequency as allowed by the regulation, the magnetic field strength of the generating field shall be varied from zero until modulation of the tag is detected and the tag is identified.

7.1.2.1 ISO/IEC 18000-2 compliant tag

The selection of system parameters shall be done in order to challenge the tag energy supply.

Identification magnetic field threshold, $H_{THR\ Identification}$, measurement procedure:

1) The waveform generator shall be set to the required operating frequency of 125 kHz or 134,2 kHz.

2) The waveform generator amplitude shall be set to a value below the identification magnetic field threshold. This amplitude is typically zero.

3) The tag shall be inserted in the test equipment.

4) An inventory command shall be continuously sent with the code generator and the amplitude shall be increased after each inventory command until the complete UII can be measured with the Helmholtz equipment coils.

5) The data transfer shall be verified by comparison with ISO/IEC 18000-2. In case the tag response is wrong, then step 4) shall be repeated with higher amplitude.

6) The tag shall be removed from the test equipment.

7) The magnetic field strength H for the individual tag shall be calculated by use of the measurement U_{RHTA}.

The measurements shall be performed on all tags. $H_{THR\ Identification}$ shall be the highest value of all measured magnetic field strength H for the individual tags.

7.1.2.2 ISO/IEC 18000-3 compliant tag

The selection of system parameters shall be done in order to challenge the tag energy supply.

Identification magnetic field threshold, $H_{THR\ Identification}$, measurement procedure:

1) The waveform generator shall be set to the required operating frequency of 13,56 MHz.

2) The waveform generator amplitude shall be set to a value below the identification magnetic field threshold. This amplitude is typically zero.

3) The tag shall be inserted in the test equipment.

© ISO/IEC 2012 – All rights reserved
Documents
Document Sharing Hub
Full document details: BS ISO/IEC 18046-3:2012

4) An inventory command shall be continuously sent with the code generator and the amplitude shall be increased after each inventory command until the complete UII can be measured with the sense coils.

5) The data transfer shall be verified by comparison with ISO/IEC 18000-3. In case the tag response is wrong, then step 4) shall be repeated with higher amplitude.

6) The tag shall be removed from the test equipment and the calibration coil shall be inserted in the test equipment.

7) The magnetic field strength H for the individual tag shall be calculated by use of the measurement made on the calibration coil.

The measurements shall be performed on all tags. $H_{THR\ Identification}$ shall be the highest value of all measured magnetic field strength H for the individual tags.

7.1.2.3 ISO/IEC 18000-6 compliant tag

The selection of system parameters shall be done in order to challenge the tag energy supply.

Identification magnetic field threshold, $H_{THR\ Identification}$, measurement procedure:

1) The waveform generator shall be set to the required operating frequency (860 MHz to 960 MHz in 5 MHz steps, with additional tests at 866 MHz, 915 MHz, and 953 MHz).

2) The waveform generator amplitude shall be set to a value below the identification magnetic field threshold. This amplitude is typically zero.

3) The tag shall be inserted in the equipment test.

4) An inventory command shall be continuously sent with the code generator and the amplitude shall be increased after each inventory command until the complete UII can be measured with the test antenna

5) The data transfer shall be verified by comparison with ISO/IEC 18000-6. In case the tag response is wrong, then step 4) shall be repeated with higher amplitude.

6) The tag shall be removed from the test equipment and the calibration coil shall be inserted in the test equipment.

7) The magnetic field strength H for the individual tag shall be calculated by use of the measurement made on the calibration coil.

The measurements shall be performed on all tags. The $H_{THR\ Identification}$ value is the highest magnetic field strength of all measurements.

7.1.3 Test report

The test report shall give the measured identification magnetic field threshold $H_{THR\ Identification}$, the environment conditions and communication parameters. All these parameters shall be recorded according to the example in Table 1.

© ISO/IEC 2012 – All rights reserved

Documents
Document Sharing Hub
Full document details: BS ISO/IEC 18046-3:2012

Table 1 — Parameters that shall be recorded for this measurement

Test: Identification magnetic field threshold ($H_{THR\ Identification}$)		
Temperature:	Humidity:	
Tag Protocol:	Tag UII:	
Forward Link		
Modulation index: %	Data rate: kbps	Data coding:
Full command code: 0x		
Return Link		
Data rate: kbps	Data coding:	
Test Results		
$H_{THR\ Identification}$	**xx,xx mA/m**	

7.2 Reading magnetic field threshold ($H_{THR\ Read}$)

7.2.1 Purpose

The purpose of this test is to determine the threshold level of magnetic field strength that allows a tag reading. In order to successfully read tag data, the command need to be transmitted correctly and enough energy (flux density) shall be available to read the tag. The reading magnetic field threshold, $H_{THR\ Read}$, is the minimum magnetic field strength allowing tag reading.

7.2.2 Test procedure

At a fixed frequency the magnetic field strength of the generating field has to be varied from zero until a reading of block user memory is possible. The reading shall be performed on the first and the last block memory address with a read single block command. Beforehand, all blocks of the user memory shall be filled with data having the same number of 1 and 0 uniformly distributed. (i.e. by using the binary digits represented by the byte sequence 5A hex, 3C hex, 0F hex and F0 hex throughout the memory for a four bytes memory block).

7.2.2.1 ISO/IEC 18000-2 compliant tag

The selection of system parameters shall be done in order to challenge the tag energy supply.

Reading magnetic field threshold, $H_{THR\ Read}$, measurement procedure:

1) The waveform generator shall be set to the required operating frequency of 125 kHz or 134,2 kHz.

2) The waveform generator amplitude shall be set to a value below the identification magnetic field threshold. This amplitude is typically zero.

3) The tag shall be inserted in the test equipment.

4) A read single block command shall be continuously sent to the first block address with the code generator and the amplitude shall be increased after each read single block command until the complete tag response can be measured with the Helmholtz equipment coils.

5) The data transfer shall be verified by comparison with ISO/IEC 18000-2. In case the tag response is wrong, then step 4) shall be repeated with higher amplitude.

6) The tag shall be removed from the test equipment.

7) The magnetic field strength H for the individual tag shall be calculated by use of the measurement U_{RHTA} as defined in ISO/IEC 18047-2.

8) Repeat steps 3) to 7) with the read single block command sent to the last block address.

© ISO/IEC 2012 – All rights reserved
Documents
Document Sharing Hub
Full document details: BS ISO/IEC 18046-3:2012

The measurements shall be performed on all tags. $H_{THR\ Read}$ shall be the highest value of all measured magnetic field strength H for the individual tags.

7.2.2.2 ISO/IEC 18000-3 compliant tag

The selection of system parameters shall be done in order to challenge the tag energy supply.

Reading magnetic field threshold, $H_{THR\ Read}$, measurement procedure:

1) The waveform generator shall be set to the required operating frequency of 13,56 MHz.

2) The waveform generator amplitude shall be set to a value below the identification magnetic field threshold. This amplitude is typically zero.

3) The tag shall be inserted in the test equipment.

4) A read single block command shall be continuously sent to the first block address with the code generator and the amplitude shall be increased after each read single block command until the complete tag response can be measured with the sense coils.

5) The data transfer shall be verified by comparison with ISO/IEC 18000-3. In case the tag response is wrong, then step 4) shall be repeated with higher amplitude.

6) The tag shall be removed from the test equipment and the calibration coil shall be inserted in the test equipment.

7) The magnetic field strength H for the individual tag shall be calculated by use of the measurement made on the calibration coil.

8) The steps 3) to 7) shall be repeated with the read single block command sent to the last block address.

The measurements shall be performed on all tags. $H_{THR\ Read}$ shall be the highest value of all measured magnetic field strength H for the individual tags.

7.2.3 Test report

The test report shall give the measured reading magnetic field threshold $H_{THR\ Read}$, the environment conditions and communication parameters. All these parameters shall be recorded according to the example in Table 2.

Table 2 — Parameters that shall be recorded for this measurement

Test: Reading magnetic field threshold ($H_{THR\ Read}$)		
Temperature:	Humidity:	
Tag Protocol:	Tag UII:	
Forward Link		
Modulation index:%	Data rate: kbps	Data coding:
Block number:		
Command: 0x		
Return Link		
Data rate: kbps	Data coding:	
Data block size: bytes	Data read:	
Test Results		
$H_{THR\ Read}$	**xx,xx mA/m**	

© ISO/IEC 2012 – All rights reserved

Documents
Document Sharing Hub
Full document details: BS ISO/IEC 18046-3:2012

7.3 Writing magnetic field threshold ($H_{THR\ Write}$)

7.3.1 Purpose

The purpose of this test is to determine the threshold level of magnetic field strength that allows tag writing. In order to successfully write data into the tag, the data shall be transmitted correctly and enough energy (flux density) shall be available during the memory access. The writing magnetic field threshold, $H_{THR\ Write}$, is the minimum magnetic field strength allowing writing into the tag.

7.3.2 Test procedure

At a fixed frequency the magnetic field strength of the generating field has to be varied from zero until a writing of block user memory is possible. The writing shall be performed on the first and the last block memory address with a write single block command. The data shall have the same number of 1 and 0 uniformly distributed and its size equal to the block size. (i.e by using the binary digits represented by the byte sequence 5A hex, 3C hex, 0F hex and F0 hex throughout the memory for a four bytes memory block).

7.3.2.1 ISO/IEC 18000-2 compliant tag

The selection of system parameters shall be done in order to challenge the tag energy supply.

Writing magnetic field threshold, $H_{THR\ Write}$, measurement procedure:

1) The waveform generator shall be set to the required operating frequency of 125 kHz or 134,2 kHz.

2) The waveform generator amplitude shall be set to a value below the identification magnetic field threshold. This amplitude is typically zero.

3) The tag shall be inserted in the test equipment.

4) A write single block command shall be continuously sent to the first block address with the code generator and the amplitude shall be increased after each write single block command until the complete tag response can be measured with the Helmholtz equipment coils.

5) The data transfer shall be verified by comparison with ISO/IEC 18000-2. In case the tag response is wrong, then step 4) shall be repeated with higher amplitude.

6) The tag shall be removed from the test equipment.

7) The magnetic field strength H for the individual tag shall be calculated by use of the measurement U_{RHTA}.

8) The steps 3) to 7) shall be repeated with the write single block command sent to the last block address.

The measurements shall be performed on all tags. $H_{THR\ Write}$ shall be the highest value of all measured magnetic field strength H for the individual tags.

7.3.2.2 ISO/IEC 18000-3 compliant tag

The selection of system parameters shall be done in order to challenge the tag energy supply.

Writing magnetic field threshold, $H_{THR\ Write}$, measurement procedure:

1) The waveform generator shall be set to the required operating frequency of 13,56 MHz.

2) The waveform generator amplitude shall be set to a value below the identification magnetic field threshold. This amplitude is typically zero.

© ISO/IEC 2012 – All rights reserved
Documents
Document Sharing Hub
Full document details: BS ISO/IEC 18046-3:2012