BS ISO/IEC 18046-4:2015

BSI Standards Publication

Information technology — Radio frequency identification device performance test methods

Part 4: Test methods for performance of RFID gates in libraries

bsi.

...making excellence a habit.™

Document Sharing Hub

Full document details: BS ISO/IEC 18046-4:2015

National foreword

This British Standard is the UK implementation of ISO/IEC 18046-4:2015.

The UK participation in its preparation was entrusted to Technical Committee IST/34, Automatic identification and data capture techniques.

A list of organizations represented on this committee can be obtained on request to its secretary.

This publication does not purport to include all the necessary provisions of a contract. Users are responsible for its correct application.

© The British Standards Institution 2015.
Published by BSI Standards Limited 2015

ISBN 978 0 580 85563 4

ICS 35.040

Compliance with a British Standard cannot confer immunity from legal obligations.

This British Standard was published under the authority of the Standards Policy and Strategy Committee on 31 December 2015.

Amendments/corrigenda issued since publication

Date	Text affected

Documents
Document Sharing Hub

Full document details: BS ISO/IEC 18046-4:2015

INTERNATIONAL STANDARD

ISO/IEC 18046-4

First edition
2015-12-15

Information technology — Radio frequency identification device performance test methods —

Part 4: Test methods for performance of RFID gates in libraries

Technologies de l'information — Méthodes d'essai des performances du dispositif d'identification par radiofréquence —

Partie 4: Méthodes d'essai de la performance des portes à RFID dans les bibliothèques

Reference number
ISO/IEC 18046-4:2015(E)

Documents
Document Sharing Hub

© ISO/IEC 2015

Full document details: BS ISO/IEC 18046-4:2015

COPYRIGHT PROTECTED DOCUMENT

© ISO/IEC 2015, Published in Switzerland

All rights reserved. Unless otherwise specified, no part of this publication may be reproduced or utilized otherwise in any form or by any means, electronic or mechanical, including photocopying, or posting on the internet or an intranet, without prior written permission. Permission can be requested from either ISO at the address below or ISO's member body in the country of the requester.

ISO copyright office
Ch. de Blandonnet 8 • CP 401
CH-1214 Vernier, Geneva, Switzerland
Tel. +41 22 749 01 11
Fax +41 22 749 09 47
copyright@iso.org
www.iso.org

© ISO/IEC 2015 – All rights reserved

Documents
Document Sharing Hub

Full document details: BS ISO/IEC 18046-4:2015

Contents

Page

Foreword ... **v**
Introduction ... **vi**
1 Scope ... **1**
2 Normative references ... **1**
3 Terms and definitions ... **1**
4 Symbols and abbreviated terms ... **6**
4.1 Symbols ... 6
4.2 Abbreviated terms ... 7
5 Conditions applicable to the test methods ... **7**
5.1 Number of interrogators to be tested ... 7
5.2 Test environment ... 7
5.3 RF environment ... 7
5.4 Pre-conditioning ... 7
5.5 Default tolerance ... 8
5.6 Total measurement uncertainty ... 8
5.7 Test result reporting ... 8
5.8 Test communication parameters ... 8
5.9 Test equipment limits ... 8
5.10 Human exposure to EMF ... 8
6 Required auxiliary means for performance tests ... **8**
6.1 Movement apparatus ... 8
6.2 PC with test software ... 8
6.3 Reference blocks ... 9
6.3.1 General ... 9
6.3.2 Tags ... 9
6.3.3 Tag block ... 9
6.3.4 Tag bundle ... 10
6.3.5 Media stack ... 11
6.4 Active interferer ... 13
6.5 Passive Interferer ... 14
7 Performance tests ... **14**
7.1 General remarks ... 14
7.2 Measurement of transmitter carrier H-field level ... 14
7.3 Detection field homogeneity ... 17
7.4 Reliability of detection ... 18
7.4.1 General ... 18
7.4.2 Procedure (on the basis of AFI) ... 19
7.4.3 Procedure with increased walking speed ... 19
7.4.4 Procedure with 6 tags and read data of 34 bytes, walking speed (only on the basis of AFI) ... 20
7.4.5 Procedure with 6 tags and read data of 34 bytes, increased walking speed (only on the basis of AFI) ... 20
7.5 Stack performance ... 20
7.6 Immunity to interferences ... 22
7.6.1 General ... 22
7.6.2 Analysis 1 (active interferer) ... 23
7.6.3 Analysis 2 (passive metallic interferer) ... 25
8 Assessment of the complete product test ... **26**
9 Certificate ... **26**
Annex A (normative) **Test Record (AFI)** ... **27**

Documents
Document Sharing Hub

© ISO/IEC 2015 – All rights reserved

Full document details: BS ISO/IEC 18046-4:2015

Annex B (informative) **Media stack** **41**
Bibliography **42**

© ISO/IEC 2015 – All rights reserved
Documents
Document Sharing Hub
Full document details: BS ISO/IEC 18046-4:2015

Foreword

ISO (the International Organization for Standardization) and IEC (the International Electrotechnical Commission) form the specialized system for worldwide standardization. National bodies that are members of ISO or IEC participate in the development of International Standards through technical committees established by the respective organization to deal with particular fields of technical activity. ISO and IEC technical committees collaborate in fields of mutual interest. Other international organizations, governmental and non-governmental, in liaison with ISO and IEC, also take part in the work. In the field of information technology, ISO and IEC have established a joint technical committee, ISO/IEC JTC 1.

The procedures used to develop this document and those intended for its further maintenance are described in the ISO/IEC Directives, Part 1. In particular the different approval criteria needed for the different types of document should be noted. This document was drafted in accordance with the editorial rules of the ISO/IEC Directives, Part 2 (see www.iso.org/directives).

Attention is drawn to the possibility that some of the elements of this document may be the subject of patent rights. ISO and IEC shall not be held responsible for identifying any or all such patent rights. Details of any patent rights identified during the development of the document will be in the Introduction and/or on the ISO list of patent declarations received (see www.iso.org/patents).

Any trade name used in this document is information given for the convenience of users and does not constitute an endorsement.

For an explanation on the meaning of ISO specific terms and expressions related to conformity assessment, as well as information about ISO's adherence to the WTO principles in the Technical Barriers to Trade (TBT) see the following URL: Foreword - Supplementary information

The committee responsible for this document is ISO/IEC JTC 1, *Information technology*, Subcommittee SC 31, *Automatic identification and data capture techniques*.

ISO/IEC 18046 consists of the following parts, under the general title *Information technology — Radio frequency identification device performance test methods*:

— *Part 1: Test methods for system performance*

— *Part 2: Test methods for interrogator performance*

— *Part 3: Test methods for tag performance*

— *Part 4: Test methods for performance of RFID gates in libraries*

© ISO/IEC 2015 – All rights reserved

Documents
Document Sharing Hub
Full document details: BS ISO/IEC 18046-4:2015

Introduction

This part of ISO/IEC 18046 covers test methods for the performance of HF RFID gates in libraries. The term HF RFID gate refers to an HF RFID interrogator that supports an arrangement of several HF RFID antennas utilizing multiplexers or splitters. Antenna pairs are usually placed on opposite sides of a so-called passage way through which tags are moved and captured. The positioning of such HF RFID gates at entrances, exits and transit positions within buildings thus permits the capturing of access and/or outward movement of objects/media or media stacks.

At the same time, the possibility of stack (bundle) detection permits the simultaneous recognition of several tags. HF RFID gates are available as permanently installed or mobile variants. The reading range of HF RFID gates is limited but can be set in the range of 0,5 m to 2 m for 13,56 MHz (inductive coupling) systems based on the size and number of antennas and/or of the tag properties.

The main purpose of the gates within a library lies in anti-theft protection of media using simple reading of security bits (AFI or EAS) on a tag. Aside from that, they also permit the capturing of the specific medium by reading out extended information that can be additionally stored in a tag. There are also hybrid systems, which additionally allow capturing of so-called EAS magnetic strips.

HF RFID gates within libraries are frequently used in combination with visitor counters (e.g. light barriers) which permit direction-dependent capturing of gate use. These visitor counters can be installed optionally or can alternatively be a fixed part of the gate.

Current gates can recognize tags in horizontal and vertical as well as diagonal positions. A few possess auto-tuning functions that automatically correct the magnetic field if there is a drop in performance.

The selected operating mode (AFI) is constant throughout the entire individual tests.

Figure 1 shows four essential processes that could be identified for HF RFID gates in libraries. These are, on the one hand, the registration of media security at the time of access/outward movement of objects and therewith the alarm functions. Then, there is the pure detection of media information of the tags that have been moved. Furthermore, there is the optional counting of visitors and finally, the communication with the backend systems of the library, though this is not compulsory. In its main function of media security, a gate should also function offline.

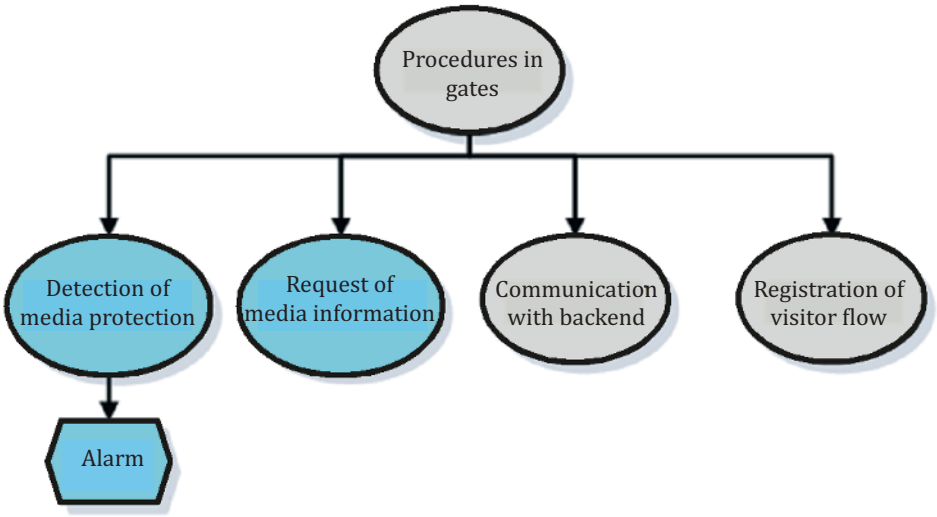

Figure 1 — Typical process flow at a gate

By increasing service demands in the area of opening times and increasing cost pressures at the same time, public and academic libraries increasingly rely on the use of automated accounting systems based on radio frequency technology. In addition to posting the media for lending and return, the technology also provides an anti-theft device. Core components for preventing burglary are sensor systems, which

© ISO/IEC 2015 – All rights reserved
Documents Document Sharing Hub
Full document details: BS ISO/IEC 18046-4:2015

are installed in the form of pass gates at the entry and exit. Prior to this part of ISO/IEC 18046, there were no requirements and test specifications that describe the performance of these sensor systems uniformly. With the present test methods for standardization of performance evaluation of HF RFID gates for use in libraries, this gap will be closed.

The RFID performance of the gates can be impaired if objects that have an influence on the magnetic fields are present in the direct vicinity of the gates. Materials such as metals, water and substances with a high density can influence transmission here. In libraries, it is mostly due to constructional and/or architectural reasons that such objects are present in the direct vicinity of HF RFID gates. These can be metallic door frames, staircase railings, floor heating as well as sign plates or metallic furniture. In many cases, it is not possible to maintain a minimum distance, resulting in possible performance losses of the antennas. Special influence is also exerted by power lines with high output or lines with power line telecommunication within the building which are laid into the floor or in the walls and are not visually identifiable as sources of interference.

Influences can be caused by active and passive sources. These include the RFID components themselves. The passive sources of interference include all kinds of furniture of a library composed of or containing metal which can possibly have an interfering influence and can distort the detection field. This also includes tags disposed in the vicinity of the gates which are positioned in a secured variant within the library. All kinds of electrical devices and machines that can exert an electro-magnetic influence on the gate in libraries, and/or buildings, in general, can be summed up as active interferers.

In this part of ISO/IEC 18046, references to HF RFID gates, interrogators, and tags usually assume HF RFID gates, HF interrogators, and HF tags.

© ISO/IEC 2015 – All rights reserved

Documents
Document Sharing Hub
Full document details: BS ISO/IEC 18046-4:2015

Documents
Document Sharing Hub

Full document details: BS ISO/IEC 18046-4:2015

INTERNATIONAL STANDARD ISO/IEC 18046-4:2015(E)

Information technology — Radio frequency identification device performance test methods —

Part 4: Test methods for performance of RFID gates in libraries

1 Scope

This part of ISO/IEC 18046 defines test methods for performance characteristics of HF RFID gates in libraries for item management and specifies the general requirements and test requirements for HF RFID gates in libraries which are applicable to the selection of the gates for an application. The summary of the test reports form a unified tag datasheet. It does not apply to testing in relation to regulatory or similar requirements.

2 Normative references

The following documents, in whole or in part, are normatively referenced in this document and are indispensable for its application. For dated references, only the edition cited applies. For undated references, the latest edition of the referenced document (including any amendments) applies.

ISO/IEC 18000-3, *Information technology — Radio frequency identification for item management — Part 3: Parameters for air interface communications at 13,56 MHz*

ISO/IEC 18046-3, *Information technology — Radio frequency identification device performance test methods — Part 3: Test methods for tag performance*

ISO/IEC 19762[1)], *Information technology — Automatic identification and data capture (AIDC) techniques — Harmonized vocabulary*

EN 300330-1 V 1.8.0:2014-06, *Electromagnetic compatibility and Radio spectrum Matters (ERM); Short Range Devices (SRD); Radio equipment in the frequency range 9 kHz to 25 MHz and inductive loop systems in the frequency range 9 kHz to 30 MHz; Part 1: Technical characteristics and test methods*

3 Terms and definitions

For the purposes of this document, the terms and definitions given in ISO/IEC 19762 and the following apply.

3.1
walking speed
at a speed of 1 m/s

3.2
increased walking speed
at a speed of 2 m/s

3.3
direction of movement
<direction of movement through the gate> direction in which a gate is passed by persons in normal operation

1) To be published.

© ISO/IEC 2015 – All rights reserved

Documents
Document Sharing Hub
Full document details: BS ISO/IEC 18046-4:2015

3.4
system interface
describes the interface, over which the system "Gate" exchanges information with a higher level IT system

Note 1 to entry: The system interface is accessible from outside the object. Often, a proprietary, interrogator-specific, communication protocol is applied here.

3.5
rate of detection
represents the average number of detected tags per test set-up over three repetitions per distance travelled

3.6
travel distance
testing instruments such as tag, tag bundles or media stacks are moved on the travel distance through the gate (DUT)

Note 1 to entry: Its length is 3 m. At the same time, the centre point of the travelling distance lies at half depth of the gate. In cases, where the gate has an especially large depth, the travelling distance is extended such that its start and its end are securely at a distance at which no tag can be detected.

3.7
reference plane
plane to which all measures of altitude refer as shown in Figure 2

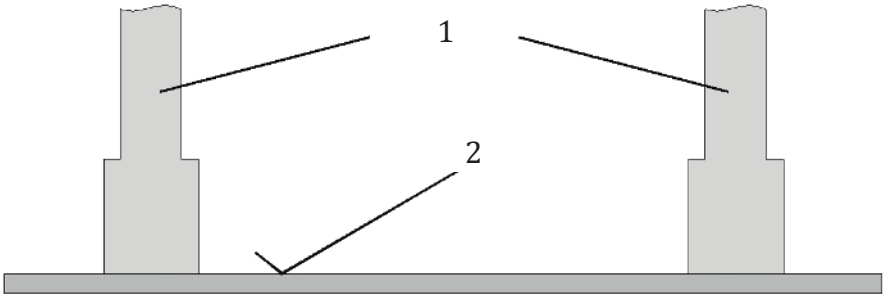

Key

1 antenna

2 reference plane

Figure 2 — Reference plane

Note 1 to entry: The reference plane corresponds to the plane on which persons pass through the gate when it is actually mounted. The gate is directly mounted on this plane. The reference plane is a part of the measurement apparatus. For ensuring stability, the gate is directly mounted on the mounting plate of the movement apparatus. It is at the height of the reference plane.

3.8
gate width
width that is of relevance for the persons passing through the gate as shown in Figure 3

© ISO/IEC 2015 – All rights reserved
Documents
Document Sharing Hub
Full document details: BS ISO/IEC 18046-4:2015

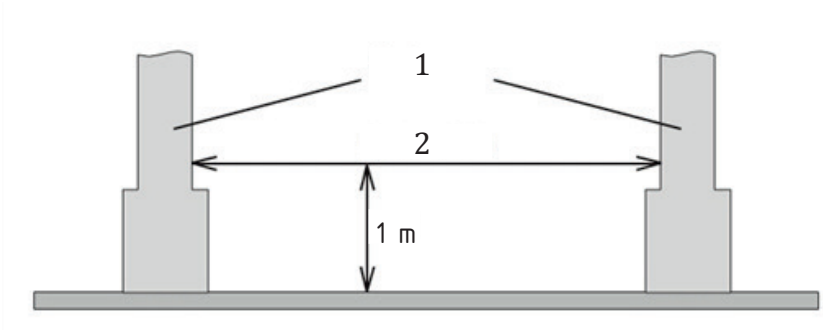

Key

1 antenna

2 gate width

Figure 3 — Gate width

Note 1 to entry: The passage width refers to the distance between the antennas which is of relevance for the passage of persons through the gate. The gate width is measured at 1 m height above the reference plane.

3.9
detection range
right-angled slice plane of the passage way (route) between two gate antennas

Note 1 to entry: The detection range is restricted

— to the gate width of the gate in terms of width, and

— to the upper limit of the detection range (h) specified by the manufacturer or, if this information is missing, to the upper limit of the gate housing, and to the lower limit of the detection range (m) specified by the manufacturer or, if this information is missing, to the fixed dimension of m = 25 cm above the reference plane, in terms of height.

Note 2 to entry: The dimensions of the acquisition range are defined once and are identically applicable to all analyses.

3.10
operating mode
DUT is operated in the same operating mode during the tests

Note 1 to entry: That means that the detection is based on the AFI principle during all individual tests.

3.11
tag state "secured"
AFI byte possesses the value 07 (0x07)

Note 1 to entry: The address data refers to the data sheet of the chip used.

3.12
tag state "borrowed"
AFI byte possesses the value 194 (0xC2)

Note 1 to entry: The address data refers to the data sheet of the chip used.

3.13
tag Orientation
A plane of the tag antenna parallel to the planes of the gate antennas, main dimension of the tag antenna in walking direction

© ISO/IEC 2015 – All rights reserved

Documents
Document Sharing Hub
Full document details: BS ISO/IEC 18046-4:2015

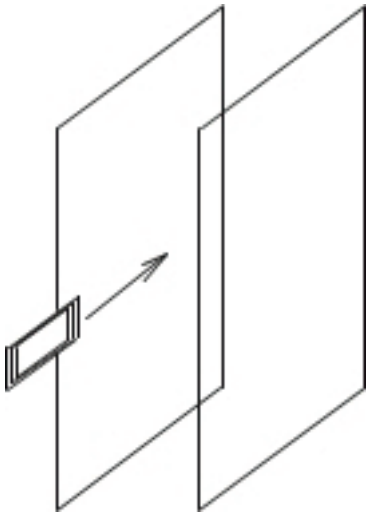

Figure 4 — Tag orientation A

B planes of the tag antenna rectangular to the planes of the gate antennas, main dimension of the tag antenna vertical

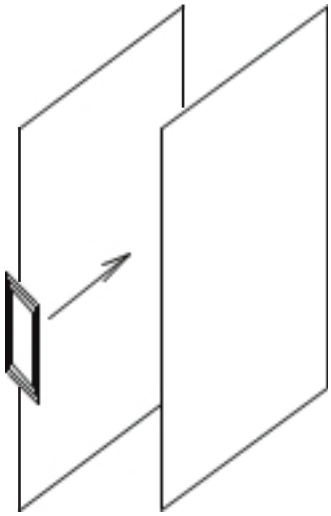

Figure 5 — Tag orientation B

C plane of the tag antenna horizontally, main dimension of the tag in walking direction

© ISO/IEC 2015 – All rights reserved
Documents
Document Sharing Hub
Full document details: BS ISO/IEC 18046-4:2015

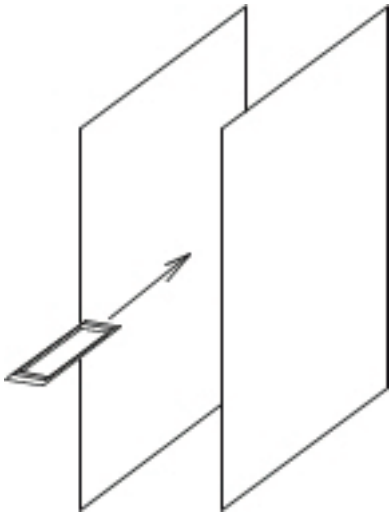

Figure 6 — Tag orientation C

D analogue to A, plane of the tag antenna 30° raked at the longitudinal axis of the main dimension

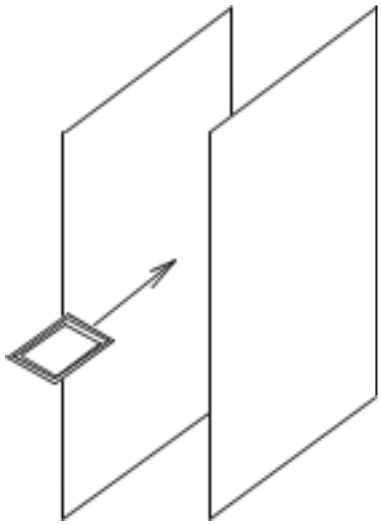

Figure 7 — Tag orientation D

E analogue C, plane of the tag antenna 30° raked at the axis in the antenna plane rectangular to the main dimension

© ISO/IEC 2015 – All rights reserved

Documents
Document Sharing Hub
Full document details: BS ISO/IEC 18046-4:2015

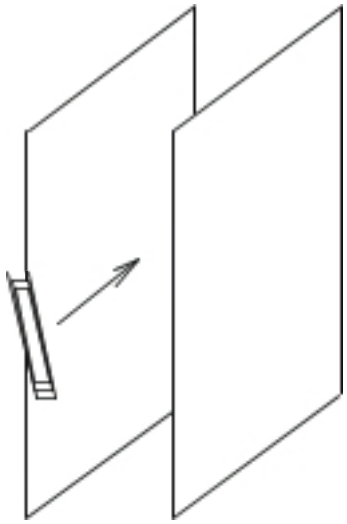

Figure 8 — Tag orientation E

F planes of the tag antenna parallel to the plans of the gate antennas, main direction of the tag antenna vertical

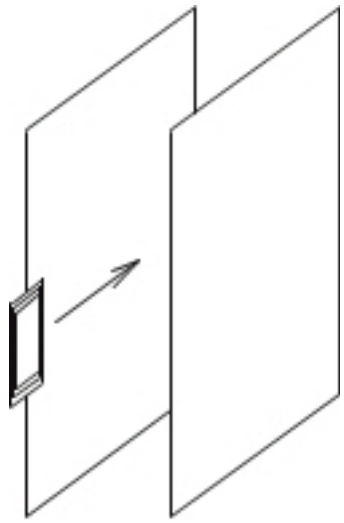

Figure 9 — Tag orientation F

4 Symbols and abbreviated terms

4.1 Symbols

For the purposes of this part of ISO/IEC 18046, the symbols found in ISO/IEC 19762 and the following apply.

b gate width (in m)

e travel plane spacing (in m)

f frequency (in Hz)

g antenna width (in m)

© ISO/IEC 2015 – All rights reserved
Documents
Document Sharing Hub
Full document details: BS ISO/IEC 18046-4:2015

H magnetic field intensity (in A/m)

h upper limit of the detection range (in m)

k plane distance (in m)

l travel distance (in m)

m lower limit of the detection range (in m)

n distance from the antenna plane to the first measurement points (in m)

p workstation height (in m)

s distance between interferer and gate (in m)

u distance between the antennas of a tag (in m)

4.2 Abbreviated terms

For the purposes of this part of ISO/IEC 18046, the symbols found in ISO/IEC 19762 and the following apply.

AFI application family identifier

DUT device under test

EAS electronic article surveillance

UID unique identifier

NOTE ISO/IEC JTC 1 SC 31, in general, uses the term UII; however, as ISO/IEC 18000-3 Mode 1 directly refers to ISO/IEC 15693, the term UID applies in this case.

UII unique item identifier

5 Conditions applicable to the test methods

5.1 Number of interrogators to be tested

Unless otherwise specified, testing shall be performed on 1 randomly chosen interrogator or gate.

5.2 Test environment

Unless otherwise specified, testing shall take place in air environment of temperature 23 °C +/- 3 °C (73 °F +/- 5 °F) and of relative humidity 40 % to 60 %.

5.3 RF environment

The tests shall be performed in a known RF environment.

For measurement with operating frequencies below 30 MHz a typical laboratory environment is sufficient, where consideration is given to minimize the impact of electromagnetic sources that may influence the results.

5.4 Pre-conditioning

Where pre-conditioning is required by the test method, the identification tags to be tested shall be conditioned to the test environment for a period of 24 hours before testing.

© ISO/IEC 2015 – All rights reserved

Documents
Document Sharing Hub
Full document details: BS ISO/IEC 18046-4:2015