BS ISO/IEC 24458:2022

BSI Standards Publication

Information technology — Automatic identification and data capture techniques — Bar code printer and bar code reader performance testing specification

Documents
Document Sharing Hub

Full document details: BS ISO/IEC 24458:2022

National foreword

This British Standard is the UK implementation of ISO/IEC 24458:2022.

The UK participation in its preparation was entrusted to Technical Committee IST/34, Automatic identification and data capture techniques.

A list of organizations represented on this committee can be obtained on request to its committee manager.

Contractual and legal considerations

This publication has been prepared in good faith, however no representation, warranty, assurance or undertaking (express or implied) is or will be made, and no responsibility or liability is or will be accepted by BSI in relation to the adequacy, accuracy, completeness or reasonableness of this publication. All and any such responsibility and liability is expressly disclaimed to the full extent permitted by the law.

This publication is provided as is, and is to be used at the recipient's own risk.

The recipient is advised to consider seeking professional guidance with respect to its use of this publication.

This publication is not intended to constitute a contract. Users are responsible for its correct application.

© The British Standards Institution 2022
Published by BSI Standards Limited 2022

ISBN 978 0 539 12304 3

ICS 35.040.50

Compliance with a British Standard cannot confer immunity from legal obligations.

This British Standard was published under the authority of the Standards Policy and Strategy Committee on 30 June 2022.

Amendments/corrigenda issued since publication

Date	Text affected

Documents
Document Sharing Hub

Full document details: BS ISO/IEC 24458:2022

INTERNATIONAL STANDARD

ISO/IEC 24458

First edition
2022-05

Information technology – Automatic identification and data capture techniques – Bar code printer and bar code reader performance testing specification

Reference number
ISO/IEC 24458:2022(E)

Documents
Document Sharing Hub
© ISO/IEC 2022

Full document details: BS ISO/IEC 24458:2022

COPYRIGHT PROTECTED DOCUMENT

© ISO/IEC 2022

All rights reserved. Unless otherwise specified, or required in the context of its implementation, no part of this publication may be reproduced or utilized otherwise in any form or by any means, electronic or mechanical, including photocopying, or posting on the internet or an intranet, without prior written permission. Permission can be requested from either ISO at the address below or ISO's member body in the country of the requester.

ISO copyright office
CP 401 • Ch. de Blandonnet 8
CH-1214 Vernier, Geneva
Phone: +41 22 749 01 11
Email: copyright@iso.org
Website: www.iso.org

Published in Switzerland

© ISO/IEC 2022 – All rights reserved

Documents
Document Sharing Hub

Full document details: BS ISO/IEC 24458:2022

Contents

Page

Foreword ... **iv**
Introduction ... **v**
1 Scope ... **1**
2 Normative references ... **1**
3 Terms, definitions and symbols ... **2**
3.1 Terms and definitions ... 2
3.2 Symbols ... 4
4 Bar code printer and consumables ... **5**
4.1 Bar code printer ... 5
4.1.1 General requirements ... 5
4.1.2 Performance evaluation items and test methods ... 6
4.1.3 Performance ranking ... 15
4.2 Consumables (reception papers, labels and ribbons) ... 18
4.2.1 General requirement ... 18
4.2.2 Performance evaluation items and test methods ... 19
4.2.3 Performance ranking ... 21
4.3 Test report ... 23
5 Bar code reader ... **23**
5.1 General ... 23
5.1.1 Principle ... 23
5.1.2 Ambient environment conditions ... 24
5.2 Performance evaluation items and test methods ... 25
5.2.1 Test chart for reading performance tests ... 25
5.2.2 Reading performance ... 30
5.2.3 Electrical property ... 35
5.2.4 Environmental characteristic ... 36
5.2.5 Mechanical properties ... 36
5.3 Performance ranking ... 38
5.3.1 General ... 38
5.3.2 Reading performance ... 38
5.3.3 Electrical property ... 41
5.3.4 Environmental characteristic ... 42
5.3.5 Mechanical property ... 43
5.4 Test report ... 43
Annex A (informative) **Standard image components corresponding to nominal dpi** ... **45**
Annex B (informative) **Read record form** ... **49**
Annex C (informative) **Outline of ISO/IEC 15416:2016, E.3** ... **52**
Annex D (informative) **Test report** ... **53**
Annex E (normative) **Test chart for bar code reader reading performance test** ... **57**
Bibliography ... **59**

© ISO/IEC 2022 – All rights reserved

Documents
Document Sharing Hub
Full document details: BS ISO/IEC 24458:2022

Foreword

ISO (the International Organization for Standardization) and IEC (the International Electrotechnical Commission) form the specialized system for worldwide standardization. National bodies that are members of ISO or IEC participate in the development of International Standards through technical committees established by the respective organization to deal with particular fields of technical activity. ISO and IEC technical committees collaborate in fields of mutual interest. Other international organizations, governmental and non-governmental, in liaison with ISO and IEC, also take part in the work.

The procedures used to develop this document and those intended for its further maintenance are described in the ISO/IEC Directives, Part 1. In particular, the different approval criteria needed for the different types of document should be noted. This document was drafted in accordance with the editorial rules of the ISO/IEC Directives, Part 2 (see www.iso.org/directives or www.iec.ch/members_experts/refdocs).

Attention is drawn to the possibility that some of the elements of this document may be the subject of patent rights. ISO and IEC shall not be held responsible for identifying any or all such patent rights. Details of any patent rights identified during the development of the document will be in the Introduction and/or on the ISO list of patent declarations received (see www.iso.org/patents) or the IEC list of patent declarations received (see patents.iec.ch).

Any trade name used in this document is information given for the convenience of users and does not constitute an endorsement.

For an explanation of the voluntary nature of standards, the meaning of ISO specific terms and expressions related to conformity assessment, as well as information about ISO's adherence to the World Trade Organization (WTO) principles in the Technical Barriers to Trade (TBT) see www.iso.org/iso/foreword.html. In the IEC, see www.iec.ch/understanding-standards.

This document was prepared by Joint Technical Committee ISO/IEC JTC 1, *Information technology*, Subcommittee SC 31, *Automatic identification and data capture techniques*.

Any feedback or questions on this document should be directed to the user's national standards body. A complete listing of these bodies can be found at www.iso.org/members.html and www.iec.ch/national-committees.

© ISO/IEC 2022 – All rights reserved
Documents
Document Sharing Hub
Full document details: BS ISO/IEC 24458:2022

Introduction

Bar code printers and bar code readers are key equipment in auto-ID systems. However, manufacturers of this equipment evaluate their products' performance by their own test methods and measures, specifying this performance in their catalogues. As a result, actual performance varies, although there are some performance values that are the same across catalogues. Therefore, users are forced to test the equipment in order to find the most suitable solutions for their applications, at their own cost.

This document was developed to provide standard test and ranking methods giving users a **common ruler** to be able to evaluate performance values in selecting equipment to meet their needs.

Furthermore, this document is expected to be used in avoiding using poor quality products.

NOTE There are ISO/IEC 15419 and ISO/IEC 15423. ISO/IEC 15419 mainly specifies how to print a barcode as a digital image, so that the contents focus on software development and look like a technical suggestion with no details on how to evaluate performances of a bar code printer in total.

This document specifies more details how to test and evaluate complete printer performances including durability of printed labels.

ISO/IEC 15423 is made based on that a scanner and a decoder are separated devices, which is a quite old fashion system. Although, a combination case of a scanner and a decoder is mentioned.

This document specifies more details how to test and evaluate reader performances, which covers test items specified in ISO/IEC 15423.

© ISO/IEC 2022 – All rights reserved

Documents
Document Sharing Hub
Full document details: BS ISO/IEC 24458:2022

Documents
Document Sharing Hub

Information technology – Automatic identification and data capture techniques – Bar code printer and bar code reader performance testing specification

1 Scope

This document specifies the performance evaluation specifications of thermal transfer type printers (hereinafter referred to as bar code printers), consumables, and bar code readers (regardless of the reading method) used in bar code systems. The rank of performance is also defined by the evaluation items.

This document can be applied to the following evaluation tests by combining ISO/IEC 15416 and ISO/IEC 15415, which define the print qualities of bar code symbols.

NOTE This document is not prevented from being cited in the evaluation of thermal printers using thermal paper and printers using "plain or exclusive paper" (commercial printing, ink jet printers, electrophotographic printers, etc.).

a) Print performance of bar code printers (including consumables)

b) Brightness and smoothness of "reception paper or label", and adhesion of the label

c) Strength of reception paper or label on which the bar code is printed

d) Reading performance of bar code readers

e) Electrical, mechanical and environmental characteristics of bar code printers and bar code readers

2 Normative references

The following documents are referred to in the text in such a way that some or all of their content constitutes requirements of this document. For dated references, only the edition cited applies. For undated references, the latest edition of the referenced document (including any amendments) applies.

ISO 105-A03, *Textiles — Tests for colour fastness — Part A03: Grey scale for assessing staining*

ISO 105-C06, *Textiles — Tests for colour fastness — Part C06: Colour fastness to domestic and commercial laundering*

ISO 105-F09, *Textiles — Tests for colour fastness — Part F09: Specification for cotton rubbing cloth*

ISO 105-X11, *Textiles — Tests for colour fastness — Part X11: Colour fastness to hot pressing*

ISO 105-X12, *Textiles — Tests for colour fastness — Part X12: Colour fastness to rubbing*

ISO 2470-1, *Paper, board and pulps — Measurement of diffuse blue reflectance factor — Part 1: Indoor daylight conditions (ISO brightness)*

ISO 29862, *Self adhesive tapes — Determination of peel adhesion properties*

ISO 6353-2, *Reagents for chemical analysis — Part 2: Specifications — First series*

ISO 8791-5, *Paper and board — Determination of roughness/smoothness (air leak methods) — Part 5: Oken method*

© ISO/IEC 2022 – All rights reserved

Documents
Document Sharing Hub
Full document details: BS ISO/IEC 24458:2022

ISO/IEC 15426-1, *Information technology — Automatic identification and data capture techniques — Bar code verifier conformance specification — Part 1: Linear symbols*

ISO/IEC 15426-2, *Information technology — Automatic identification and data capture techniques — Bar code verifier conformance specification — Part 2: Two-dimensional symbols*

ISO/IEC 19762, *Information technology — Automatic identification and data capture (AIDC) techniques — Harmonized vocabulary*

ISO/IEC 60068-2-1, *Environmental testing — Part 2-1: Tests — Test A: Cold*

ISO/IEC 60068-2-6, *Environmental testing — Part 2-6: Tests — Test Fc: Vibration (sinusoidal)*

ISO/IEC 60068-2-78, *Environmental testing — Part 2-78: Tests — Test Cab: Damp heat, steady state*

ISO/IEC 60529, *Degrees of protection provided by enclosures (IP Code)*

ISO/IEC 61000-4-2, *Electromagnetic compatibility (EMC) — Part 4-2: Testing and measurement techniques — Electrostatic discharge immunity test*

ISO/IEC 61000-4-3, *Electromagnetic compatibility (EMC) — Part 4-3: Testing and measurement techniques — Radiated, radio-frequency, electromagnetic field immunity test*

ISO/IEC 61000-4-4, *Electromagnetic compatibility (EMC) — Part 4-4: Testing and measurement techniques — Electrical fast transient/burst immunity test*

IEC CISPR 32, *Electromagnetic compatibility of multimedia equipment — Emission requirements*

3 Terms, definitions and symbols

For the purposes of this document, the terms and definitions given in ISO/IEC 19762, and the following apply

ISO and IEC maintain terminology databases for use in standardization at the following addresses:

— ISO Online browsing platform: available at https://www.iso.org/obp

— IEC Electropedia: available at https://www.electropedia.org/

3.1 Terms and definitions

3.1.1
adhesion characteristics
clinging performance of a label attached to a base material to be adhered.

3.1.2
brightness
degree of whiteness of the print surface of the reception paper or label.

3.1.3
ceramic label
label in which a bar code symbol is printed on the surface of a raw ceramic material before-burning, and then is burned to form a ceramic.

3.1.4
consumables
reception papers, labels and ribbons that shall be refilled by the user as needed.

3.1.5
fixed mount reader
bar code reader (also called a stationary reader) that is fixed to specific locations.

© ISO/IEC 2022 – All rights reserved
Documents
Document Sharing Hub
Full document details: BS ISO/IEC 24458:2022

3.1.6
label
reception paper having an adhesive applied to the back surface thereof.

3.1.7
ladder type print
print state in which the height direction of the bar is perpendicular to the movement direction of the medium to be printed.

3.1.8
lateral motion reading speed
maximum speed at which a one-dimensional symbol can be read while the symbol or the bar code reader is moving in a direction perpendicular to the elements of symbols.

3.1.9
nominal dpi
number of dots per inch, rounded to be conventionally an integral number, multiplied by 25,4 times the number of dots per mm.

3.1.10
performance rank
ranking for performance of each evaluation item.

3.1.11
picket fence print
print state in which the height direction of the bar is in the horizontal direction with respect to the movement direction of the medium to be printed.

3.1.12
print
transfer ink from a ribbon to a reception paper or a label using a thermal transfer printer and represent a bar code, etc.

3.1.13
printing
press a bar code using a plate and ink.

3.1.14
reception paper
paper or film having an ink receptible layer.

3.1.15
release liner
paper or film (also referred to as backing paper) having a surface processed to be anti-adhesive.

3.1.16
ribbon
roll of hot-melt ink applied to one side of a film.

3.1.17
smoothness
degree of the flatness of a reception paper or label surface.

3.1.18
test chart
high-precision bar code symbol printed on a photo paper for use in the reading performance test of bar code readers.

© ISO/IEC 2022 – All rights reserved

Documents
Document Sharing Hub
Full document details: BS ISO/IEC 24458:2022

3.1.19
thermal print head
electronic component having a structure in which a multiple of minute heating resistors are linearly arranged, and which works to apply heat to a ribbon.

3.1.20
thermal transfer printer and bar code printer
equipment that incorporates a function of converting data into a bar code image and transfers ink from a ribbon using heat (by any method of thermal transfer) to the image.

3.2 Symbols

In this document, unless otherwise specified, the following symbols are used:

AV Variation of read time between print quality grades in axial non-uniformity test

B Number of bends in the interface cable strength test

BRPT Test charts for bar code reader performance tests

DCV Variation of reading time between print quality grades in decoding facility test

DOF Reading depth when bar code reader reads symbol (depth of field)

DV Variation of read time between print quality grades in defect test

F Smoothness of the reception paper

FV Variation of read time between print quality grades in fixed pattern damage test

GV Variation of read time between print quality grades in grid non-uniformity test

H Fall distance in non-pack drop test

L Maximum illuminance in the ambient illuminance test

Ms Moving speed of the moving object reading speed test

MV Variation of read time between print quality grades in modulation test

N Number of depressions in the trigger switch endurance test

PSmax Maximum print speed

Re Minimum print resolution

RT Value obtained by dividing the reading time in the reading speed test by the number of readings (100)

RTV Time obtained by subtracting the minimum reading time from the maximum reading time in the symbol contrast test

T Time to print 50 consecutive sets of standard images

Tmps The value obtained by dividing T by 50 when consecutive sets of standard images were printed with print quality overall grade 1,5 or a value more than but close to 1,5

UV Variation of read Time between print quality grades in unused error correction capacity test

Va Electrostatic strength in the air discharge test

© ISO/IEC 2022 – All rights reserved
Documents
Document Sharing Hub
Full document details: BS ISO/IEC 24458:2022

Vc Electrostatic strength in contact discharge test

4 Bar code printer and consumables

4.1 Bar code printer

4.1.1 General requirements

Basic print-mechanism of a general thermal transfer printer is shown in Figure 1.

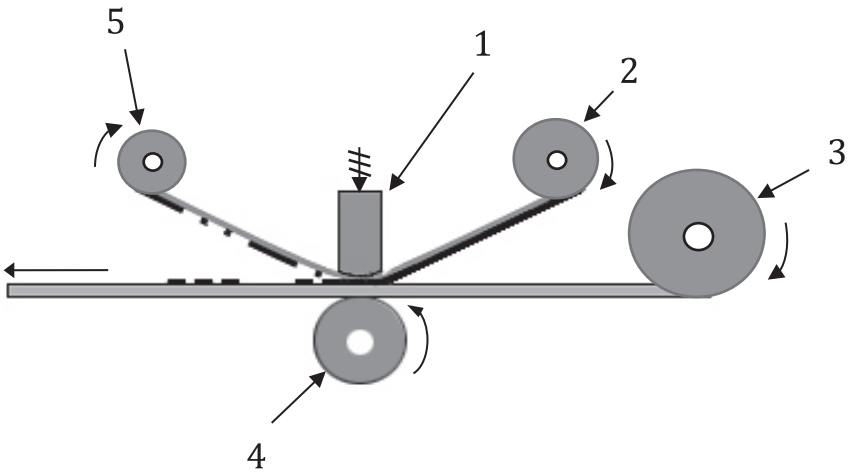

Key

1 thermal print head
2 ribbon (unwinding)
3 reception paper of label roles (supplying)
4 platen roller
5 ribbon (winding)

Figure 1 — Basic print mechanism of thermal transfer printer

As shown in Figure 1, a "reception paper or label" and a ribbon are passed between the platen roller and the thermal print head, and the thermal print head is normally pressed down and secured to provide the appropriate print pressure. As the platen roller rotates in the direction of the arrow, the "reception paper or label" and ribbon move in the transport direction. In synchronism with this movement, the ink on the ribbon is melted by heating the heating elements of the thermal print head and transferred to the “reception paper or label”. At this time, the heating element that heats is only an element corresponding to the image to be printed.

Print condition setting and environmental conditions are as follows.

a) Print condition setting on thermal transfer printer to be evaluated

It is desirable that a thermal transfer printer to be evaluated in this document is set to a condition estimated to be optimal for the "reception paper or label" and the ribbon used in the test. This print setting serves to maximize the print performance of the bar code printer to be evaluated.

NOTE In the thermal transfer type, it is known that the print quality varies depending on the combination of the "reception paper or label" and the ribbon.

b) Ambient environment conditions

© ISO/IEC 2022 – All rights reserved

Documents
Document Sharing Hub
Full document details: BS ISO/IEC 24458:2022

For bar code printers in which ink is melted by heat and transferred to a “reception paper or label”, ambient temperature affects print quality, but also thermal conductivity, specific heat capacity, etc. of the “reception paper or label”, the ribbon, the platen, etc. affect print quality. Also, condensation on the thermal print head may cause failure. In order to print bar codes while maintaining high print quality, precaution shall be paid to the surrounding environment.

Performance tests of bar code printers shall be performed under the following environmental conditions. However, when the environmental conditions are individually stipulated in each performance evaluation test item, or when there is a quote standard in each evaluation test item, the stipulations or standard shall be given priority. In addition, during tests, the temperature and/or humidity shall not be abruptly changed to conditions where condensation occurs.

— temperature : 18 °C to 28 °C

— humidity : 30 % Rh to 70 % Rh

— Before starting the performance evaluation tests, the main body of the bar code printer (non-energization), the "reception paper or label" and the ribbon used for the tests shall be left in the above-mentioned temperature and humidity environment for at least 6 h.

Ambient environmental conditions at the time of the tests shall be recorded in the test result report of 4.3 together with the test results.

4.1.2 Performance evaluation items and test methods

4.1.2.1 Standard image for evaluation of printer performance tests

Standard images for evaluation of printer performance (hereinafter referred to as standard images) shall be used and evaluated under the specified conditions.

The standard image is based on BCP-nnn-1 (nnn is nominal dpi; the same applies hereinafter) and BCP-nnn-2 (see Figure 2), and the combination shown in Figure 4 is set in accordance with the width of the reception paper or label. The standard image has the following features (see Annex A).

— One-dimensional and two-dimensional symbols for evaluating bar code print quality

— Corner marks (see Figure 5) that help to visually determine print quality

— Image pattern to use all of the heating elements that enables failure detection of the thermal printhead heating elements

— 90 degrees rotated bar code for knowing the quality of print in ladder type and in picket fence type

— Strings to determine the legibility of small characters

— Counter for counting the number of prints (one set)

— Logo mark may be printed in image mode (see A.2)

The corner mark shall use the bitmap image defined in A.1.1. The other images shall be created by a dedicated commands of the bar code printer to be evaluated. The positions at which the one-dimensional symbols and the two-dimensional symbols are printed are based on the arrangement shown in Figure 2, but the base points of each symbol are not defined. However, it shall not be arranged so as to infringe the quiet zone of the symbol.

The size of BCP-nnn-1 and BCP-nnn-2 is 50,8 mm × 76,2 mm (2 inches × 3 inches), which can be used in conjunction for nominal 200, 300, 400 and 600 dpi bar code printers commonly used for “reception papers or labels” of 50,4 mm (2 inches) to 203,2 mm (8 inches) wide and 254,0 mm (10 inches) wide (see Figure 4).

NOTE 1 dpi is the resolution and the number of dots per inch (1 inch is 25,4 mm).

© ISO/IEC 2022 – All rights reserved
Documents
Document Sharing Hub
Full document details: BS ISO/IEC 24458:2022

NOTE 2 The standard image is mainly used to evaluate the maximum print speed, the minimum print resolution, the suitability of the reception paper or label with the ribbon, and the like.

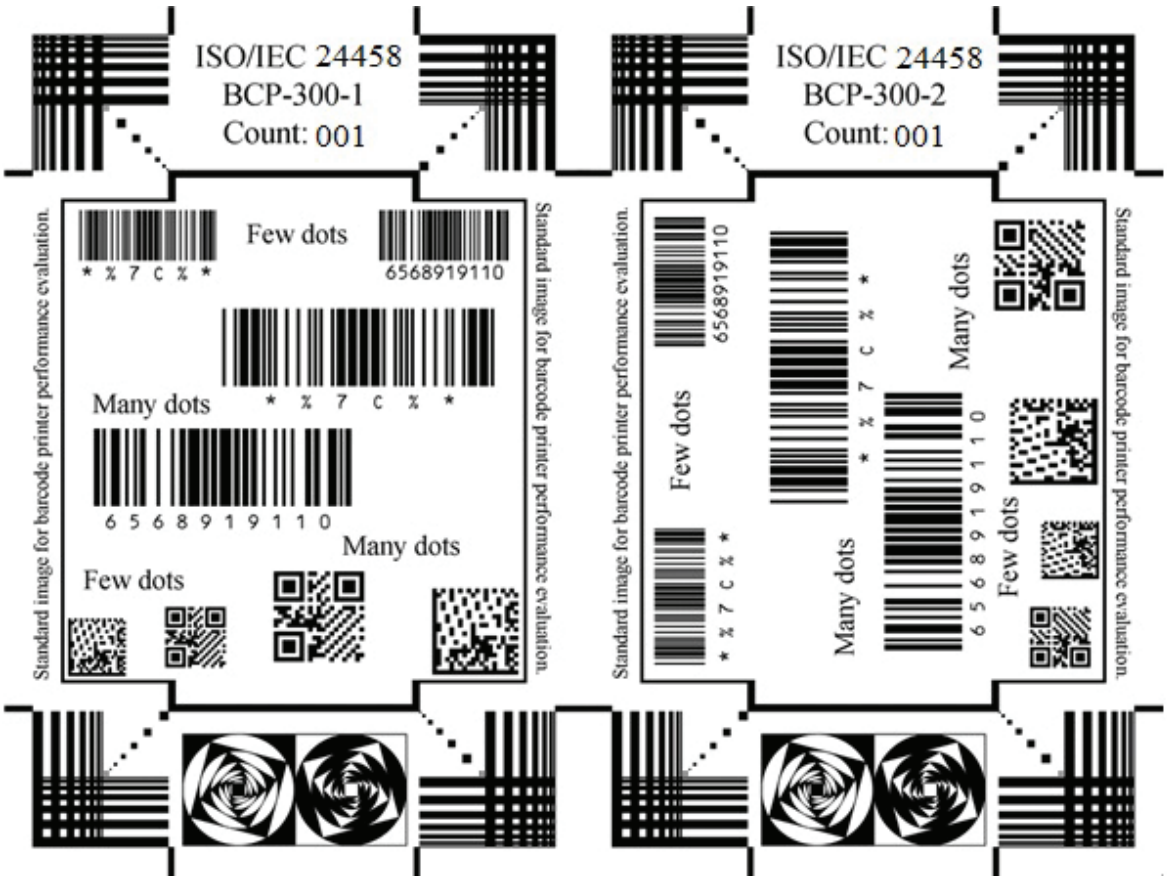

Figure 2 — Example of individual image arrangement of standard image for evaluation of performance of bar code printer

— The International Standard number ("ISO/IEC 24458"), standard image number ("BCP-300-1" and "BCP-300-2"), number count ("count:001") and "Standard image for bar code printer performance evaluation." displayed on the standard image shall be selected from the fonts and sizes built into the barcode printer.

NOTE 3 Font and size are taken into account so as not to break the overall balance.

— As the frame line width surrounding the bar code symbol, the numbers of dots constituting the minimum element (many dots) of the one-dimensional symbol are used (see Table 1).

— The value of the number-of-sheets count is printed on anyone (or all) of the standard images in the set of standard images defined in Figure 4. Table 1 shows the number of dots constituting the minimum elements of the one-dimensional symbol and the two-dimensional symbol according to dpi of the bar code printer.

Table 1 — Number of dots making up the minimum element at nominal dpi

Nominal dpi	One-dimensional symbol		Two-dimensional symbol	
	Few dots	Many dots	Few dots	Many dots
180	1(0,143 mm)	2(0,286 mm)	2(0,286 mm)	3(0,429 mm)
200	1(0,125 mm)	2(0,250 mm)	2(0,250 mm)	3(0,375 mm)
NOTE Numbers in parentheses are reference values obtained by converting the number of dots into mm.				

© ISO/IEC 2022 – All rights reserved

Documents
Document Sharing Hub
Full document details: BS ISO/IEC 24458:2022

Table 1 *(continued)*

Nominal dpi	One-dimensional symbol		Two-dimensional symbol	
	Few dots	Many dots	Few dots	Many dots
300	2(0,167 mm)	3(0,250 mm)	3(0,250 mm)	4(0,333 mm)
360	2(0,143 mm)	3(0,214 mm)	3(0,214 mm)	5(0,357 mm)
400	2(0,125 mm)	4(0,250 mm)	3(0,188 mm)	6(0,375 mm)
600	2(0,083 mm)	6(0,250 mm)	3(0,125 mm)	8(0,333 mm)
NOTE Numbers in parentheses are reference values obtained by converting the number of dots into mm.				

The specifications of the one-dimensional symbol and the two-dimensional symbol to be printed with the standard image are shown in Table 2.

Table 2 — Specifications of bar codes printed in standard Image

Item	Code 39 (See ISO/IEC 16388)	Code 128 (See ISO/IEC 15417)	Data matrix (See ISO/IEC 16022)	QR code (See ISO/IEC 18004)
Data	*%7C%*	STC 65 68 91 91 10	40 "0"s	41 "0"s
Narrow/wide ratio (N)	1:3	—	—	—
Intercharacter gap	1X	—	—	—
Check character	None	66(STX)	—	—
Bar height (Regardless with few dots or many dots bar width) (180 dpi)[a] 200 dpi 300 dpi (360 dpi)[a] 400 dpi 600 dpi	 [35 dots (approx.5 mm) or more] 40 dots (approx.5 mm) or more 60 dots (approx.5 mm) or more [70 dots (approx.5 mm) or more] 80 dots (approx.5 mm) or more 120 dots (approx.5 mm) or more		—	—
Symbol size and error correction level	-	-	20 x 20 automatic	21 x 21 L
Readable characters and points	OCR B not specified	OCR B not specified	None	None
NOTE The first "STC" in the data of the code 128 represents the start C. [a] The bar height can vary because a “reception paper or label” less than 50,8 mm (2 inches) wide can be improperly printed.				

The print combination of the standard image according to the “reception paper or label” width is according to Figure 4. The downward arrow is the direction of transportation of the "reception paper or label" and the ribbon. In Figure 4, the 127,0 mm (5 inches) wide and the 177,8 mm (7 inches) wide are printed by providing blanks of 25,4 mm (1 in) (if there are changes in the 127,0 mm (5 inches) width and the 177,8 mm (7 inches) width, provide appropriate blanks) between BCP-nnn-1 and BCP-nnn-2. At this time, the two protruding lines of the opposed corner marks shall be extended and connected. The “reception paper or label” and the ribbon shall be of a size sufficient to print a standard image.

Bar code printers that use a “reception paper or label” other than the width shown in Figure 4, for example, in the form of a tape less than 50,8 mm (2 inches) wide, may relocate the elementary images

© ISO/IEC 2022 – All rights reserved
AVA Documents Document Sharing Hub
Full document details: BS ISO/IEC 24458:2022

that make up the standard image and print them side-by-side in series. In this case, print may be performed in the following manner.

— Four corner marks (without two outwardly protruding bars)

— Code 39 changed to the number of printable dots and the number of printable characters

— Printable two-dimensional symbols in Table 2 (sufficient quiet zones shall be provided)

— ISO/IEC number

— Standard image number

— Count the number of sheets

Further, the symbols to be verified for the bar code print quality may be evaluated only by the symbols that have been printed.

An example of using a tape-like reception paper or label less than 2 inches wide is shown in Figure 3.

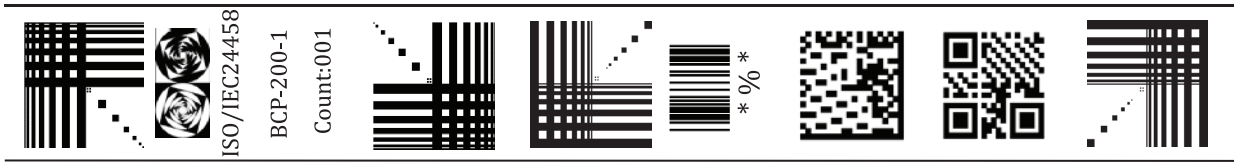

Figure 3 — Example of standard image arrangement for "reception paper or label" less than 50,8 mm (2 inches) wide

© ISO/IEC 2022 – All rights reserved

Documents
Document Sharing Hub
Full document details: BS ISO/IEC 24458:2022

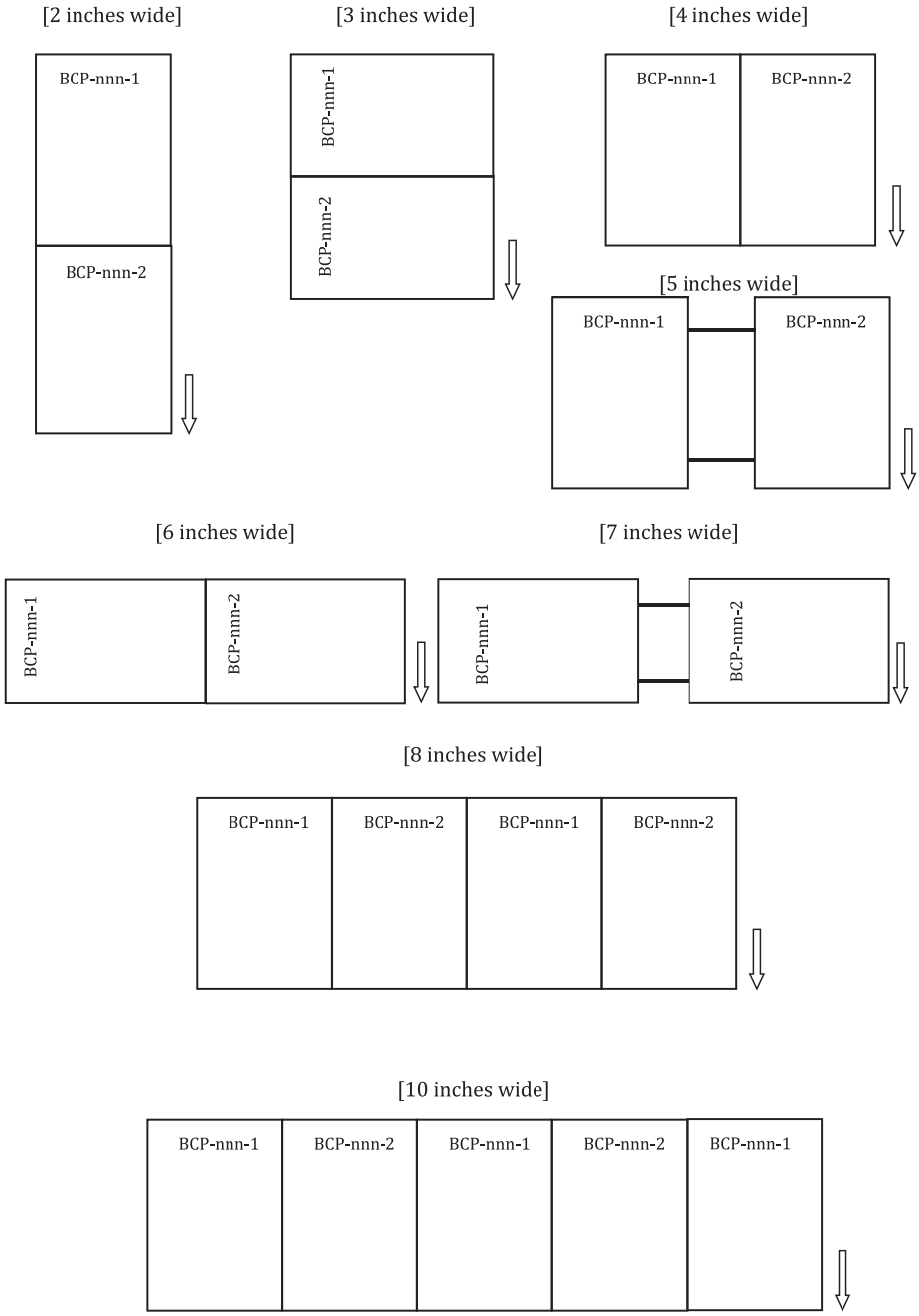

Figure 4 — Standard image print configuration by difference in "reception paper or label" width

Regarding corner marks, enlarged images are shown in Figure 5 and print details are shown in Table 3.

© ISO/IEC 2022 – All rights reserved
Documents
Document Sharing Hub
Full document details: BS ISO/IEC 24458:2022

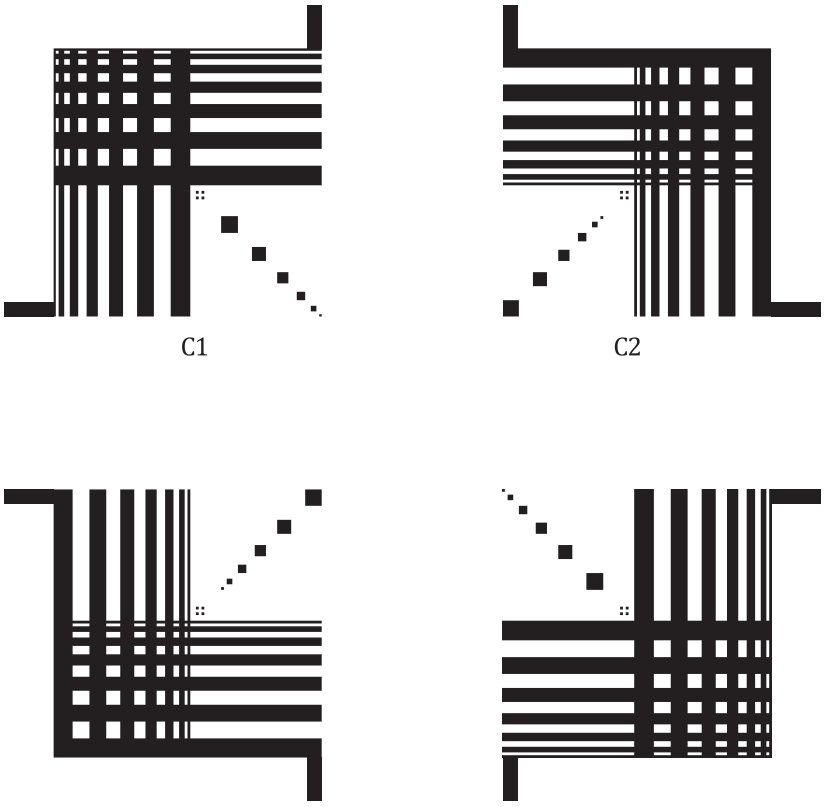

Figure 5 — Enlarged image of corner marks (for nominal 200, 400 and 600 dpi)

Table 3 — Print corner marks

Item	Configuration
Corner marks	Bitmap images (see A.1.2) corresponding to the dpi (nominally 200 dpi, 300 dpi, 400 dpi and 600 dpi) of the bar code printer are printed at specified positions and specified orientations without enlargement or reduction. The print position is as shown in Figure 2.
Protruding line	The corner marks have two lines protruding outward from the whole square. These lines serve to detect a failure of the thermal printhead heating element. For "reception papers or labels" with widths of 127,0 mm (5 inches) and 177,8 mm (7 inches), a length of bar sufficient to fill the gap between BCP-nnn-1 and BCP-nnn-2 is required. The widths of the lines are 4 dots in the nominal 200 dpi and 6 dots in the nominal 300 dpi. The nominal 400 dpi uses twice the nominal 200 dpi of dots, and the nominal 600 dpi uses three times the nominal 200 dpi of dots.
NOTE Do not apply to "reception papers or labels" less than 50,8 mm (2 inches) wide.	

4.1.2.2 Print quality

Here, the evaluation test method of the overall print quality grade of symbols, the maximum print speed and the minimum print resolution are defined. The evaluation specimen is a set of the first, 25th, and 50th samples in which the standard images are arranged according to the width of reception paper or the label as shown in Figure 4 and are printed consecutively. The bar code symbols and corner marks to be evaluated are shown in Table 4.

© ISO/IEC 2022 – All rights reserved

Documents
Document Sharing Hub
Full document details: BS ISO/IEC 24458:2022

Table 4 — Bar code symbols and corner marks to be evaluated

Nominal width of the reception paper or label	Bar code symbol to be evaluated for print quality
50,8 mm (2 inches) wide, 101,6 mm (4 inches) wide, 127 mm (5 inches) wide, 203,2 mm (8 inches) wide and 10 inches wide	One-dimensional symbols and two-dimensional symbols (many dots) and four corner marks in BCP-nnn-1 In case of 8-inches wide and 10-inches wide, one-dimensional symbols and two-dimensional symbols (many dots) and four corner marks in the left-most BCP-nnn-1.
76,2 mm (3 inches) wide, 152,4 mm (6 inches) wide and 177,8 mm (7 inches) wide	One-dimensional symbols and two-dimensional symbols (many dots) and four corner marks in BCP-nnn-2
Less than 50,8 mm (2 inches) wide	Code 39, two-dimensional symbols and four corner marks

The bar code printer shall be tested while the speed of transfer of the “reception paper or label” is constant.

The evaluation items of the print performance of the bar code printer and the test methods thereof are as follows.

a) Overall print quality grade

Overall print quality grade of symbols of three sets of “reception papers or labels” printed standard images shall be measured using a verifier conforming to ISO/IEC 15426-1 for one-dimensional symbols and to ISO/IEC 15426-2 for two-dimensional symbols, then verified their grade according to ISO/IEC 15416:2016 for one-dimensional symbols and ISO/IEC 15415:2016 for two-dimensional symbols. The lowest grade among print quality grades (grades expressed numerically) of the above mentioned three samples is figured as the evaluation grade.

b) Maximum print speed

The evaluation of the maximum print speed of the bar code printer shall be performed by printing the standard images under the condition that the overall print quality grade (grade expressed numerically) of the symbols specified in Table 4 shall be 1,5 or a value more than but close to 1,5.

The maximum print speed is determined by the time required to print a set of standard images. The method is as follows.

1) Select the appropriate “reception paper or label” and ribbon, then place them in the bar code printer.

2) The transporting speed of the bar code printer is set at near the target speed, and the time T when 50 sets of standard images are printed in the continuous print mode is measured and temporarily recorded.

3) Check whether the overall print quality grade of the bar code symbols to be evaluated for print quality in Table 4 is 1,5 or more.

The overall print quality grade is a grade expressed numerically, and the measurement aperture of the bar code verifier shall be 0,8 X.

4) In the case of more than 1,5, the transporting speed of the bar code printer is further set to "fast", and 2) and 3) are repeated. If it is less than 1,5, the transporting speed of the bar code printer is further set to "slow", and 2) and 3) are repeated. In the case of a bar code printer in which the transporting speed cannot be finely set, the value is set to 1,5 or a value more than but close to 1,5.

5) The value obtained by dividing T by 50 when 1,5 (or a value more than but close to 1,5) is obtained is the time for print a set of standard images (the time for print one “reception paper or label”), and this is taken as *T*mps.

© ISO/IEC 2022 – All rights reserved
Documents
Document Sharing Hub
Full document details: BS ISO/IEC 24458:2022

6) The value obtained by dividing the length (mm) in the transporting direction shown in Figure 4 by the *T*mps value (decimal points are rounded off) is defined as the maximum print speed *PS*max (mm/s).

In this evaluation study, the maximum transporting speed may not become the maximum print speed as it is.

c) Minimum print resolution

1) The minimum print resolution of the bar code printer is not determined by the dpi number of the thermal print head, but is determined by how thin an image element can be printed, when print is performed while ensuring an overall bar code print quality grade of 1,5 or a value more than but close to 1,5.

2) In this document, a standard image adapted to the dpi of the bar code printer is used, and the number of small blank spaces identified in the four corner marks determines the print resolution.

NOTE 1 In general, the 1×1 blank area becomes to be un-identified first. The minimum print resolution often varies depending on the portion to be printed in the form of a fence or in the form of a ladder.

3) The "reception paper or label" and the ribbon used in the evaluation test of the minimum print resolution are preferably selected to be suitable for high density print. In addition, it is desirable that adjustable parameters of the bar code printer are set to be optimum for the minimum print resolution evaluation test.

4) The minimum print resolution is evaluated by the number of visually identified blank areas of squares of different sizes (24 total) and rectangles of different side lengths (120 total) in the four corner marks. It is desirable to observe the image in an enlarged manner so that the image can be clearly identified.

The composition ratio of the closed blank space existing in each corner mark of Figure 5 is shown in Table 5.

Table 5 — Composition ratio of blank areas (squares and rectangles) present in corner marks

C1 corner mark

1×1	1×2	1×3	1×4	1×5	1×6
2×1	2×2	2×3	2×4	2×5	2×6
3×1	3×2	3×3	3×4	3×5	3×6
4×1	4×2	4×3	4×4	4×5	4×6
5×1	5×2	5×3	5×4	5×5	5×6
6×1	6×2	6×3	6×4	6×5	6×6

C2 corner mark

6×1	6×2	6×3	6×4	6×5	6×6
5×1	5×2	5×3	5×4	5×5	5×6
4×1	4×2	4×3	4×4	4×5	4×6
3×1	3×2	3×3	3×4	3×5	3×6
2×1	2×2	2×3	2×4	2×5	2×6
1×1	1×2	1×3	1×4	1×5	1×6

C3 corner mark

1×6	1×5	1×4	1×3	1×2	1×1
2×6	2×5	2×4	2×3	2×2	2×1
3×6	3×5	3×4	3×3	3×2	3×1
4×6	4×5	4×4	4×3	4×2	4×1
5×6	5×5	5×4	5×3	5×2	5×1
6×6	6×5	6×4	6×3	6×2	6×1

C4 corner mark

6×6	6×5	6×4	6×3	6×2	6×1
5×6	5×5	5×4	5×3	5×2	5×1
4×6	4×5	4×4	4×3	4×2	4×1
3×6	3×5	3×4	3×3	3×2	3×1
2×6	2×5	2×4	2×3	2×2	2×1
1×6	1×5	1×4	1×3	1×2	1×1

NOTE 2 Numbers in the table show relative dimensions of a blank space in "height" x "width".

5) The number of not clearly discernable blank spaces shall not be added to the number of identified blank spaces: "the blank space crushed by the thickening of the lines and the blank space divided into multiple spaces [Figure 6 b)]" and "the blank space which is not partially closed among the four sides constituting the blank space to be closed [Figure 6 c)]".

© ISO/IEC 2022 – All rights reserved

Documents
Document Sharing Hub
Full document details: BS ISO/IEC 24458:2022