BS ISO/IEC 24775-6:2014

BSI Standards Publication

Information technology — Storage management

Part 6: Fabric

bsi.

...making excellence a habit.™

Document Sharing Hub

National foreword

This British Standard is the UK implementation of ISO/IEC 24775-6:2014.

The UK participation in its preparation was entrusted to Technical Committee ICT/-/1, Information systems co-ordination.

A list of organizations represented on this committee can be obtained on request to its secretary.

This publication does not purport to include all the necessary provisions of a contract. Users are responsible for its correct application.

© The British Standards Institution 2014.
Published by BSI Standards Limited 2014

ISBN 978 0 580 84213 9
ICS 35.200

Compliance with a British Standard cannot confer immunity from legal obligations.

This British Standard was published under the authority of the Standards Policy and Strategy Committee on 31 December 2014.

Amendments/corrigenda issued since publication

Date	Text affected

Documents
Document Sharing Hub

Full document details: BS ISO/IEC 24775-6:2014

ISO/IEC 24775-6

Edition 1.0 2014-11

INTERNATIONAL STANDARD

colour inside

Information technology – Storage management – Part 6: Fabric

INTERNATIONAL ELECTROTECHNICAL COMMISSION

PRICE CODE H

ICS 35.200

ISBN 978-2-8322-1954-6

Warning! Make sure that you obtained this publication from an authorized distributor.

AVA Documents Document Sharing Hub

Full document details: BS ISO/IEC 24775-6:2014

CONTENTS

FOREWORD 21
Introduction 23
1 Scope 25
2 Normative references 25
3 Terms and definitions 25
4 Typographical conventions 26
4.1 Maturity model 26
4.2 Experimental maturity level 26
4.3 Implemented maturity level 26
4.4 Stable maturity level 27
4.5 Finalized maturity level 27
4.6 Deprecated Material 27
5 Fabric Profile 29
5.1 Description 29
5.1.1 General 29
5.1.2 SANS and Fabrics as AdminDomains 29
5.1.3 Fabrics and Topology 30
5.1.4 Systems and NetworkPorts 30
5.1.5 N Port Virtualization (NPIV) 31
5.1.6 Zoning 32
5.1.7 Conditional Classes and Properties 33
5.1.8 Fabric Predefined Indications 34
5.2 Health and Fault Management 35
5.3 Cascading Considerations 35
5.4 Supported Subprofiles and Package 35
5.5 Methods of this Profile 35
5.6 Client Considerations and Recipes 36
5.6.1 Fabric Identifier 36
5.6.2 FCPort OperationalStatus 36
5.6.3 Switch ComputerSystem OperationalStatus 36
5.6.4 Discover The Fabric Topology 37
5.7 Registered Name and Version 41
5.8 CIM Elements 41
5.8.1 General 41
5.8.2 CIM_ActiveConnection 47
5.8.3 CIM_AdminDomain (Fabric) 47
5.8.4 CIM_AdminDomain (SAN)and 48
5.8.5 CIM_Component (Platform to Fabric) 49
5.8.6 CIM_Component (Switch to Fabric) 49
5.8.7 CIM_ComputerSystem (Host Platform) 49
5.8.8 CIM_ComputerSystem (Partitioned Switch) 50
5.8.9 CIM_ComputerSystem (Storage Platform) 51
5.8.10 CIM_ComputerSystem (Switch) 51
5.8.11 CIM_ConnectivityCollection 52
5.8.12 CIM_ContainedDomain 53
5.8.13 CIM_DeviceSAPImplementation (Non-Switch to FCPort) 53
5.8.14 CIM_DeviceSAPImplementation (Switch to FCPort) 53
5.8.15 CIM_ElementCapabilities (ZoneCapabilities to Fabric) 54
5.8.16 CIM_ElementCapabilities (ZoneCapabilities to Switch) 54
5.8.17 CIM_ElementSettingData (ZoneMembershipSettingData to Zone) 55
5.8.18 CIM_FCActiveConnection 55
5.8.19 CIM_FCPort (Host FCPort) 55

AVA Documents
Document Sharing Hub
Full document details: BS ISO/IEC 24775-6:2014

5.8.20 CIM_FCPort (Host NPIV FCPort) ... 56
5.8.21 CIM_FCPort (Partitioned Switch FCPort) ... 57
5.8.22 CIM_FCPort (Storage FCPort) ... 59
5.8.23 CIM_FCPort (Switch FCPort) ... 59
5.8.24 CIM_FilterCollection (Fabric Predefined FilterCollection) ... 61
5.8.25 CIM_HostedAccessPoint (AdminDomain to ProtocolEndpoint) ... 61
5.8.26 CIM_HostedAccessPoint (ComputerSystem to ProtocolEndpoint) ... 61
5.8.27 CIM_HostedCollection (Fabric to ConnectivityCollection) ... 62
5.8.28 CIM_HostedCollection (Fabric to predefined FilterCollection) ... 62
5.8.29 CIM_HostedCollection (System to LogicalPortGroup) ... 62
5.8.30 CIM_HostedCollection (Zones or ZoneSets to Fabric) ... 63
5.8.31 CIM_HostedCollection (Zones or ZoneSets to Switch) ... 63
5.8.32 CIM_HostedDependency ... 64
5.8.33 CIM_IndicationFilter (Fabric ComputerSystem Creation) ... 64
5.8.34 CIM_IndicationFilter (Fabric ComputerSystem Deletion) ... 65
5.8.35 CIM_IndicationFilter (Fabric ComputerSystem OperationalStatus) ... 66
5.8.36 CIM_IndicationFilter (Fabric FCPort Creation) ... 67
5.8.37 CIM_IndicationFilter (Fabric FCPort Deletion) ... 68
5.8.38 CIM_IndicationFilter (Fabric FCPort OperationalStatus) ... 69
5.8.39 CIM_IndicationFilter (Fabric Fabric Added or Removed) ... 70
5.8.40 CIM_IndicationFilter (Fabric Fabric Merge or Segmentation) ... 71
5.8.41 CIM_IndicationFilter (Fabric Switch Added or Removed) ... 72
5.8.42 CIM_IndicationFilter (Fabric Switch Status Changed) ... 72
5.8.43 CIM_IndicationFilter (Fabric Zone Database Changed) ... 73
5.8.44 CIM_IndicationFilter (Fabric ZoneSet Activated) ... 74
5.8.45 CIM_IndicationFilter (WQL Fabric ComputerSystem OperationalStatus) ... 75
5.8.46 CIM_IndicationFilter (WQL Fabric FCPort OperationalStatus) ... 76
5.8.47 CIM_LogicalPortGroup ... 77
5.8.48 CIM_MemberOfCollection (ConnectivityCollection to ProtocolEndpoint) ... 78
5.8.49 CIM_MemberOfCollection (LogicalPortGroup to FCPort) ... 78
5.8.50 CIM_MemberOfCollection (Predefined Filter Collection to Fabric Filters) ... 78
5.8.51 CIM_MemberOfCollection (ZoneSet to Zone) ... 79
5.8.52 CIM_ProtocolEndpoint ... 79
5.8.53 CIM_SystemDevice (Non-Switch FCPort to Fabric) ... 80
5.8.54 CIM_SystemDevice (Non-Switch FCPort to Platform) ... 80
5.8.55 CIM_SystemDevice (Switch FCPort to Switch) ... 80
5.8.56 CIM_Zone (Active) ... 81
5.8.57 CIM_Zone (Inactive) ... 81
5.8.58 CIM_ZoneCapabilities ... 81
5.8.59 CIM_ZoneMembershipSettingData ... 83
5.8.60 CIM_ZoneSet (Active) ... 83
5.8.61 CIM_ZoneSet (Inactive) ... 84

6 Enhanced Zoning and Enhanced Zone Control Subprofile ... 85
6.1 Description ... 85
6.2 Health and Fault Management ... 85
6.3 Cascading Considerations ... 85
6.4 Dependencies on Profiles, Subprofiles, and Packages ... 85
6.5 Methods of this Profile ... 85
6.5.1 CreateZoneAlias ... 85
6.5.2 AddZoneAlias ... 85
6.6 Client Considerations and Recipes ... 85
6.6.1 Create a ZoneAlias ... 85
6.6.2 Delete a ZoneAlias ... 87
6.7 Registered Name and Version ... 88

AVA Documents
Document Sharing Hub
Full document details: BS ISO/IEC 24775-6:2014

6.8 CIM Elements ... 89
6.8.1 General ... 89
6.8.2 CIM_ElementSettingData (ZoneMembershipSettingData to NamedAddressCollection) ... 89
6.8.3 CIM_HostedCollection (AdminDomain to Collection) ... 89
6.8.4 CIM_HostedCollection (ComputerSystem to Collection) ... 90
6.8.5 CIM_MemberOfCollection ... 90
6.8.6 CIM_NamedAddressCollection ... 90
6.8.7 CIM_ZoneService (Zone Service) ... 91
7 Zone Control Subprofile ... 92
7.1 Description ... 92
7.2 Durable Names and Correlatable IDs of the Profile ... 92
7.3 Instrumentation Requirements ... 92
7.4 Health and Fault Management ... 92
7.5 Cascading Considerations ... 92
7.6 Dependencies on Profiles, Subprofiles, and Packages ... 92
7.7 Methods of this Profile ... 92
7.7.1 CreateZoneSet ... 92
7.7.2 CreateZone ... 93
7.7.3 CreateZoneMembershipSettingData ... 93
7.7.4 AddZone ... 93
7.7.5 AddZoneMembershipSettingData ... 93
7.7.6 ActivateZoneSetWithJob ... 93
7.7.7 ActivateZoneSet ... 94
7.7.8 SessionControlWithJob ... 94
7.7.9 SessionControl ... 95
7.7.10 Intrinsics for removing a zone from a zone set ... 96
7.7.11 Intrinsics for removing a zone alias from a zone ... 96
7.7.12 Intrinsics for removing a zone member from a zone or zone alias ... 96
7.7.13 Intrinsic for deleting a zone member ... 97
7.7.14 Intrinsic for deleting a zone, zone alias, or zone set ... 97
7.8 Client Considerations and Recipes ... 97
7.8.1 General ... 97
7.8.2 Create or delete zones Common Functions ... 97
7.8.3 Add new Zone Member to Existing Zone ... 100
7.8.4 Create new Zone, add new Zone Member, and add to existing ZoneSet ... 101
7.8.5 Create new ZoneSet and add existing Zone ... 103
7.8.6 Delete zone ... 105
7.8.7 Delete ZoneSet ... 106
7.8.8 Delete ZoneMember ... 107
7.9 Registered Name and Version ... 108
7.10 CIM Elements ... 108
7.10.1 General ... 108
7.10.2 CIM_HostedService (Fabric (AdminDomain) to ZoneService) ... 108
7.10.3 CIM_HostedService (Switch (ComputerSystem) to ZoneService) ... 109
7.10.4 CIM_ZoneService (Zone Service) ... 109
8 FDMI Subprofile ... 111
8.1 Description ... 111
8.2 Health and Fault Management ... 111
8.3 Cascading Considerations ... 111
8.4 Dependencies on Profiles, Subprofiles, and Packages ... 111
8.5 Methods of this Profile ... 112
8.6 Client Considerations and Recipes ... 112
8.7 Registered Name and Version ... 112

AVA Documents
Document Sharing Hub
Full document details: BS ISO/IEC 24775-6:2014

8.8 CIM Elements ... 112
8.8.1 General ... 112
8.8.2 CIM_Component (Host Server to Fabric) ... 112
8.8.3 CIM_ComputerSystem (Host Server) ... 113
8.8.4 CIM_ControlledBy ... 113
8.8.5 CIM_ElementSoftwareIdentity ... 114
8.8.6 CIM_FCPort (Host FCPort) ... 114
8.8.7 CIM_HostedCollection (System to LogicalPortGroup) ... 115
8.8.8 CIM_InstalledSoftwareIdentity ... 115
8.8.9 CIM_MemberOfCollection (LogicalPortGroup to FCPort) ... 115
8.8.10 CIM_PhysicalPackage (HBA Package) ... 116
8.8.11 CIM_PortController ... 116
8.8.12 CIM_Product (HBA Product) ... 117
8.8.13 CIM_ProductPhysicalComponent ... 117
8.8.14 CIM_Realizes ... 118
8.8.15 CIM_SoftwareIdentity (Driver) ... 118
8.8.16 CIM_SoftwareIdentity (Firmware) ... 118
8.8.17 CIM_SoftwareIdentity (Option ROM) ... 119
8.8.18 CIM_SystemDevice (ComputerSystem to FCPort) ... 119
8.8.19 CIM_SystemDevice (ComputerSystem to PortController) ... 120
9 Fabric Path Performance Subprofile ... 121
9.1 Description ... 121
9.2 Health and Fault Management ... 121
9.3 Dependencies on Profiles, Subprofiles, and Packages ... 121
9.4 Methods of this Profile ... 121
9.5 Client Considerations and Recipes ... 122
9.6 Registered Name and Version ... 122
9.7 CIM Elements ... 122
9.7.1 General ... 122
9.7.2 CIM_ElementStatisticalData ... 122
9.7.3 CIM_EndpointOfNetworkPipe ... 123
9.7.4 CIM_HostedCollection ... 123
9.7.5 CIM_HostedNetworkPipe ... 123
9.7.6 CIM_MemberOfCollection ... 124
9.7.7 CIM_Network ... 124
9.7.8 CIM_NetworkPipe ... 125
9.7.9 CIM_NetworkPortStatistics ... 125
9.7.10 CIM_ProtocolEndpoint ... 125
9.7.11 CIM_StatisticsCollection ... 126
10 Fibre Channel Security Subprofile ... 127
10.1 Description ... 127
10.2 Health and Fault Management Consideration ... 129
10.3 Cascading Considerations ... 129
10.4 Supported Profiles, Subprofiles, and Packages ... 129
10.5 Methods of the Profile ... 129
10.6 Client Considerations and Recipes ... 129
10.7 Registered Name and Version ... 129
10.8 CIM Elements ... 130
10.8.1 General ... 130
10.8.2 CIM_AuthorizationService ... 130
10.8.3 CIM_AuthorizedPrivilege ... 130
10.8.4 CIM_AuthorizedSubject ... 131
10.8.5 CIM_AuthorizedTarget ... 131
10.8.6 CIM_HostedService ... 131

AVA Documents
Document Sharing Hub
Full document details: BS ISO/IEC 24775-6:2014

10.8.7 CIM_ServiceAffectsElement (ManagedElement to Service) ... 132
10.8.8 CIM_ServiceAffectsElement (StorageHardwareID to Service) ... 132
10.8.9 CIM_ServiceAvailableToElement (Fabric AdminDomain to Service) ... 132
10.8.10 CIM_StorageHardwareID ... 133
11 Fabric Views Subprofile ... 134
11.1 Description ... 134
11.1.1 Synopsis ... 134
11.1.2 Overview ... 134
11.1.3 Topology View ... 135
11.1.4 FCSwitch View ... 136
11.2 Health and Fault Management Consideration ... 136
11.3 Cascading Considerations ... 136
11.4 Supported Profiles, Subprofiles, and Packages ... 136
11.5 Methods of the Profile ... 137
11.6 Client Considerations and Recipes ... 137
11.7 Registered Name and Version ... 137
11.8 CIM Elements ... 137
11.8.1 General ... 137
11.8.2 CIM_ElementCapabilities (View Capabilities) ... 138
11.8.3 SNIA_BaseInstance (View to FC Port) ... 138
11.8.4 SNIA_BaseInstance (View to Switch) ... 139
11.8.5 SNIA_ComponentView (FCSwitchView to Fabric) ... 139
11.8.6 SNIA_ComponentView (TopologyView to Fabric) ... 139
11.8.7 SNIA_FCSwitchView ... 140
11.8.8 SNIA_TopologyView ... 141
11.8.9 SNIA_ViewCapabilities ... 142
12 Virtual Fabrics Subprofile ... 143
12.1 Description ... 143
12.2 Health and Fault Management Consideration ... 145
12.3 Cascading Considerations ... 145
12.4 Supported Profiles, Subprofiles, and Packages ... 145
12.5 Methods of the Profile ... 145
12.6 Client Considerations and Recipes ... 145
12.7 Registered Name and Version ... 145
12.8 CIM Elements ... 145
12.8.1 General ... 145
12.8.2 CIM_Component (AdminDomain to Partitioning CS) ... 145
12.8.3 CIM_ElementConformsToProfile (SAN AdminDomain to Virtual Fabrics Registered-Profile) ... 146
13 Switch Profile ... 147
13.1 Description ... 147
13.1.1 General ... 147
13.1.2 FC Port Settings and Capabilities ... 148
13.1.3 Trunking ... 149
13.1.4 DetailedPortState, PortAvailability, OperationalStatus, and EnabledState ... 149
13.1.5 Conditional Classes and Properties ... 150
13.1.6 Switch Predefined Indications ... 151
13.2 Health and Fault Management ... 152
13.3 Cascading Considerations ... 153
13.4 Dependencies on Profiles, Subprofiles, and Packages ... 153
13.5 Methods of this Profile ... 153
13.6 Client Considerations and Recipes ... 153
13.6.1 Enable FCPort ... 153
13.6.2 Disable Port ... 154

AVA Documents
Document Sharing Hub
Full document details: BS ISO/IEC 24775-6:2014

13.6.3 Enable Switch ... 156
13.6.4 Disable Switch ... 157
13.6.5 Reset Switch ... 158
13.6.6 Set Port Speed ... 160
13.6.7 Set Port Type ... 161
13.6.8 Set Fibre Channel Switch Principal Priority ... 162
13.6.9 Set Switch Name ... 164
13.6.10 Set Port Name ... 165
13.6.11 Set Fibre Channel Switch Preferred Domain ID ... 166
13.6.12 Lock Fibre Channel Switch Domain ID ... 168
13.7 Registered Name and Version ... 170
13.8 CIM Elements ... 170
13.8.1 General ... 170
13.8.2 CIM_ComputerSystem (Partitioned Switch) ... 172
13.8.3 CIM_ComputerSystem (Switch) ... 173
13.8.4 CIM_ComputerSystemPackage ... 174
13.8.5 CIM_ElementCapabilities (FCPort to FCPortCapabilities) ... 175
13.8.6 CIM_ElementCapabilities (System to FCSwitchCapabilities) ... 175
13.8.7 CIM_ElementSettingData (FCPortSettings to FCPort) ... 175
13.8.8 CIM_ElementSettingData (FCSwitchSettings to ComputerSystem) ... 176
13.8.9 CIM_ElementStatisticalData (FCPortRateStatistics to FCPort) ... 176
13.8.10 CIM_ElementStatisticalData (FCPortStatistics to FCPort) ... 176
13.8.11 CIM_FCPort (Partitioned Switch FCPort) ... 177
13.8.12 CIM_FCPort (Switch FCPort) ... 178
13.8.13 CIM_FCPortCapabilities ... 179
13.8.14 CIM_FCPortRateStatistics ... 180
13.8.15 CIM_FCPortSettings ... 181
13.8.16 CIM_FCPortStatistics ... 181
13.8.17 CIM_FCSwitchCapabilities ... 183
13.8.18 CIM_FCSwitchSettings ... 184
13.8.19 CIM_FilterCollection (Switch Predefined FilterCollection) ... 184
13.8.20 CIM_HostedCollection (Redundancy Set) ... 185
13.8.21 CIM_HostedCollection (Statistics Collection) ... 185
13.8.22 CIM_HostedCollection (Switch to predefined FilterCollection) ... 185
13.8.23 CIM_IndicationFilter (Switch ComputerSystem Creation) ... 186
13.8.24 CIM_IndicationFilter (Switch ComputerSystem Deletion) ... 187
13.8.25 CIM_IndicationFilter (Switch ComputerSystem OperationalStatus) ... 187
13.8.26 CIM_IndicationFilter (Switch FCPort OperationalStatus) ... 188
13.8.27 CIM_IndicationFilter (WQL Switch ComputerSystem OperationalStatus) ... 189
13.8.28 CIM_IndicationFilter (WQL Switch FCPort OperationalStatus) ... 190
13.8.29 CIM_MemberOfCollection (FCPort to RedundancySet) ... 191
13.8.30 CIM_MemberOfCollection (NetworkPortStatistics to StatisticalCollection) ... 191
13.8.31 CIM_MemberOfCollection (Predefined Filter Collection to Switch Filters) ... 192
13.8.32 CIM_ProtocolEndpoint ... 192
13.8.33 CIM_RedundancySet ... 193
13.8.34 CIM_StatisticsCollection ... 193
13.8.35 CIM_SystemDevice ... 193
14 Switch Configuration Data Subprofile ... 195
14.1 Description ... 195
14.2 Durable Names and Correlatable IDs of the Profile ... 195
14.3 Instrumentation Requirements ... 195
14.4 Health and Fault Management ... 195
14.5 Cascading Considerations ... 195
14.6 Methods of this Profile – ApplyConfiguration ... 195

AVA Documents
Document Sharing Hub
Full document details: BS ISO/IEC 24775-6:2014

14.7 Client Considerations and Recipes ... 195
14.7.1 Get Switch Configuration ... 195
14.7.2 Set Switch Configuration ... 196
14.8 Registered Name and Version ... 196
14.9 CIM Elements ... 196
14.9.1 General ... 196
14.9.2 CIM_ComputerSystem ... 197
14.9.3 CIM_ConfigurationData ... 197
14.9.4 CIM_ElementSettingData ... 197
15 Blades Subprofile ... 199
15.1 Description ... 199
15.1.1 General ... 199
15.1.2 Instance Diagram ... 199
15.1.3 Blades Predefined Indications ... 199
15.2 Health and Fault Management ... 200
15.3 Cascading Considerations ... 201
15.4 Dependencies on Profiles, Subprofiles, and Packages ... 201
15.5 Methods of this Profile ... 201
15.6 Client Considerations and Recipes ... 201
15.7 Registered Name and Version ... 201
15.8 CIM Elements ... 201
15.8.1 General ... 201
15.8.2 CIM_FilterCollection (Blades Predefined FilterCollection) ... 202
15.8.3 CIM_HostedCollection (Switch to Blades predefined FilterCollection) ... 203
15.8.4 CIM_IndicationFilter (Blades LogicalModule Creation) ... 203
15.8.5 CIM_IndicationFilter (Blades LogicalModule Deletion) ... 204
15.8.6 CIM_IndicationFilter (Blades LogicalModule OperationalStatus) ... 205
15.8.7 CIM_IndicationFilter (WQL Blades LogicalModule OperationalStatus) ... 206
15.8.8 CIM_LogicalModule ... 207
15.8.9 CIM_MemberOfCollection (Blades FilterCollection to Switch FilterCollection) ... 207
15.8.10 CIM_MemberOfCollection (Predefined Filter Collection to Blades Filters) ... 208
15.8.11 CIM_ModulePort ... 208
15.8.12 CIM_PhysicalPackage (Logical Module) ... 208
15.8.13 CIM_Product (Blade) ... 209
15.8.14 CIM_ProductPhysicalComponent ... 209
15.8.15 CIM_Realizes (Logical Module Package) ... 209
15.8.16 CIM_SystemDevice (Logical Module) ... 210
16 Switch Partitioning Subprofile ... 211
16.1 Description ... 211
16.2 Health and Fault Management Consideration ... 212
16.3 Cascading Considerations ... 212
16.4 Supported Profiles, Subprofiles, and Packages ... 212
16.5 Methods of the Profile ... 213
16.6 Client Considerations and Recipes ... 213
16.7 Registered Name and Version ... 213
16.8 CIM Elements ... 213
16.8.1 General ... 213
16.8.2 CIM_ComputerSystem (Partitioned) ... 213
16.8.3 CIM_ComputerSystem (Partitioning) ... 214
16.8.4 CIM_ElementCapabilities (Association between NetworkPort and NetworkPortCapabilities) ... 214
16.8.5 CIM_ElementConformsToProfile (Partitioning ComputerSystem to Switch Partitioning RegisteredProfile) ... 215
16.8.6 CIM_ElementSettingData

AVA Documents
Document Sharing Hub
Full document details: BS ISO/IEC 24775-6:2014

(Association between NetworkPort and NetworkPortSettings) ... 215
16.8.7 CIM_FCPort (Partitioned) ... 216
16.8.8 CIM_HostedDependency (NetworkPort to FCPort) ... 216
16.8.9 CIM_HostedDependency (Partitioning CS to Partitioned CS) ... 217
16.8.10 CIM_NetworkPort (Partitioning) ... 217
16.8.11 CIM_NetworkPortCapabilities ... 217
16.8.12 CIM_NetworkPortSettings ... 218
16.8.13 CIM_SystemDevice (FCPort to Partitioned ComputerSystem) ... 218
16.8.14 CIM_SystemDevice (NetworkPort to ComputerSystem) ... 219
17 Extender Profile ... 220
17.1 Description ... 220
17.1.1 General ... 220
17.1.2 FC Extender Node Topology Classes ... 220
17.1.3 FC Extender Node Network Connectivity Classes ... 221
17.1.4 FC Extender Group Network Connectivity Classes ... 221
17.1.5 Extender Predefined Indications ... 222
17.2 Health and Fault Management ... 223
17.3 Cascading Considerations ... 223
17.4 Supported Subprofiles and Packages ... 224
17.5 Methods of this Profile ... 224
17.6 Client Considerations and Recipes ... 224
17.6.1 Extender Connectivity Settings ... 224
17.6.2 Extender Connective Statistics ... 226
17.6.3 Extender Port Group Information ... 228
17.6.4 Extender Topology Mapping ... 230
17.7 Registered Name and Version ... 234
17.8 CIM Elements ... 234
17.8.1 General ... 234
17.8.2 CIM_BindsTo (IPPE to PE) ... 237
17.8.3 CIM_BindsTo (IPPE to RemoteSAP) ... 237
17.8.4 CIM_BindsTo (IPPE to RemoteSAP) ... 238
17.8.5 CIM_BindsTo (PE to RemotePort) ... 238
17.8.6 CIM_BindsTo (TCPPE to IPPE) ... 238
17.8.7 CIM_BindsTo (TCPPE to PE) ... 239
17.8.8 CIM_BindsTo (TCPPE to RemotePort) ... 239
17.8.9 CIM_Component ... 239
17.8.10 CIM_ComputerSystem (Extender Node) ... 240
17.8.11 CIM_DeviceSAPImplementation ... 240
17.8.12 CIM_ElementSettingData (IPPE to IPSettings) ... 241
17.8.13 CIM_ElementSettingData (PE to FCIPSettings) ... 241
17.8.14 CIM_ElementSettingData (System to FCIPSettings) ... 241
17.8.15 CIM_ElementSettingData (System to IPSettings) ... 242
17.8.16 CIM_ElementSettingData (System to TCPSettings) ... 242
17.8.17 CIM_ElementSettingData (TCPPE to TCPSettings) ... 242
17.8.18 CIM_ElementStatisticalData (EthernetPort to EthernetPortStatistics) ... 243
17.8.19 CIM_ElementStatisticalData (FCPort to FCPortStatistics) ... 243
17.8.20 CIM_ElementStatisticalData (IPPE to IPEndpointStatistics) ... 243
17.8.21 CIM_ElementStatisticalData (System to TCPStatisticalData) ... 244
17.8.22 CIM_ElementStatisticalData (TCPPE to TCPEndpointStatistics) ... 244
17.8.23 CIM_EndpointOfNetworkPipe (PE to NetworkPipe) ... 244
17.8.24 CIM_EndpointOfNetworkPipe (TCPPE to NetworkPipe) ... 245
17.8.25 CIM_EthernetPort ... 245
17.8.26 CIM_EthernetPortStatistics ... 246
17.8.27 CIM_FCIPSettings ... 246

AVA Documents
Document Sharing Hub
Full document details: BS ISO/IEC 24775-6:2014

17.8.28CIM_FCPort ... 247
17.8.29CIM_FCPortStatistics ... 248
17.8.30CIM_FilterCollection (Extender Predefined FilterCollection) ... 250
17.8.31CIM_HostedAccessPoint (ComputerSystem to IPProtocolEndpoint) ... 250
17.8.32CIM_HostedAccessPoint (ComputerSystem to TCPProtocolEndpoint) ... 250
17.8.33CIM_HostedAccessPoint (ComputerSystem to ProtocolEndpoint) ... 251
17.8.34CIM_HostedCollection (Extender to predefined FilterCollection) ... 251
17.8.35CIM_HostedNetworkPipe ... 251
17.8.36CIM_IPEndpointStatistics ... 252
17.8.37CIM_IPProtocolEndpoint ... 252
17.8.38CIM_IPSettings ... 253
17.8.39CIM_IndicationFilter (Extender ComputerSystem Creation) ... 253
17.8.40CIM_IndicationFilter (Extender ComputerSystem Deletion) ... 254
17.8.41CIM_IndicationFilter (Extender ComputerSystem OperationalStatus) ... 255
17.8.42CIM_IndicationFilter (WQL Extender ComputerSystem OperationalStatus) ... 256
17.8.43CIM_LANEndpoint ... 257
17.8.44CIM_MemberOfCollection (Predefined Filter Collection to Extender Filters) ... 258
17.8.45CIM_Network ... 258
17.8.46CIM_NetworkPipe ... 258
17.8.47CIM_NetworkPipeComposition ... 259
17.8.48CIM_ProtocolEndpoint ... 259
17.8.49CIM_RemotePort ... 259
17.8.50CIM_RemoteServiceAccessPoint ... 260
17.8.51CIM_SystemDevice (System to EthernetPort) ... 260
17.8.52CIM_SystemDevice (System to FCPort) ... 261
17.8.53CIM_TCPEndpointStatistics ... 261
17.8.54CIM_TCPProtocolEndpoint ... 261
17.8.55CIM_TCPSettings ... 262
17.8.56CIM_TCPStatisticalData ... 262

18 Router Profile ... 264

19 SAS Expander Profile ... 265
19.1 Description ... 265
19.2 Health and Fault Management Consideration ... 266
19.3 Cascading Considerations ... 266
19.4 Supported Profiles, Subprofiles, and Packages ... 266
19.4.1 General ... 266
19.4.2 Enclosure ... 266
19.4.3 Software Inventory and Software Update ... 266
19.5 Methods of the Profile ... 266
19.6 Client Considerations and Recipes ... 266
19.7 CIM Elements ... 266
19.8 Registered Name and Version ... 266
19.9 CIM Elements ... 267
19.9.1 General ... 267
19.9.2 CIM_ComputerSystem ... 267
19.9.3 CIM_ConcreteComponent ... 268
19.9.4 CIM_ElementSoftwareIdentity ... 268
19.9.5 CIM_Product ... 268
19.9.6 CIM_ProductElementComponent ... 269
19.9.7 CIM_SASPort ... 269
19.9.8 CIM_SoftwareIdentity ... 269
19.9.9 CIM_SystemDevice (Port) ... 270
19.9.10CIM_SystemDevice (SASPHY) ... 270
19.9.11SNIA_SASPHY ... 270

AVA Documents
Document Sharing Hub
Full document details: BS ISO/IEC 24775-6:2014

20 N Port Virtualizer Profile ... 272
20.1 Description ... 272
20.2 Implementation ... 272
20.3 Health and Fault Management Consideration ... 273
20.4 Cascading Considerations ... 273
20.5 Supported Profiles, Subprofiles, and Packages ... 273
20.6 Methods of the Profile ... 273
20.7 Client Considerations and Recipes ... 273
20.8 Registered Name and Version ... 273
20.9 CIM Elements ... 273
20.9.1 General ... 273
20.9.2 CIM_Component (N Port Virtualizer to Fabric) ... 274
20.9.3 CIM_ComputerSystem (N Port Virtualizer) ... 274
20.9.4 CIM_ComputerSystemPackage (N Port Virtualizer to Physical Package) ... 275
20.9.5 CIM_DeviceSAPImplementation (ProtocolEndpoint to Gateway FCPort) ... 275
20.9.6 CIM_DeviceSAPImplementation (ProtocolEndpoint to NPIV FCPort) ... 276
20.9.7 CIM_FCActiveConnection (Gateway) ... 276
20.9.8 CIM_FCActiveConnection (N Port Virtualization) ... 277
20.9.9 CIM_FCPort (Fabric NPIV) ... 277
20.9.10 CIM_FCPort (Gateway) ... 278
20.9.11 CIM_HostedAccessPoint (N Port Virtualizer System to ProtocolEndpoint) ... 279
20.9.12 CIM_LogicalIdentity (NPIV Port to Switch Port) ... 279
20.9.13 CIM_ProtocolEndpoint (N Port Virtualizer) ... 280
20.9.14 CIM_SystemDevice (N Port Virtualizer Gateway FCPort to Gateway System) ... 280
20.9.15 CIM_SystemDevice (N Port Virtualizer NPIV FCPort to Gateway System) ... 281
21 Inter Fabric Routing Profile ... 282
21.1 Description ... 282
21.1.1 General ... 282
21.1.2 Switch Topology ... 282
21.1.3 Identification of Ports ... 283
21.2 Health and Fault Management Consideration ... 284
21.3 Cascading Considerations ... 284
21.4 Supported Profiles, Subprofiles, and Packages ... 284
21.5 Methods of the Profile ... 284
21.6 Client Considerations and Recipes ... 284
21.7 Registered Name and Version ... 284
21.8 CIM Elements ... 285
21.8.1 General ... 285
21.8.2 CIM_Component (Backbone Switch to Fabric) ... 285
21.8.3 CIM_Component (IFR Switch to Fabric) ... 285
21.8.4 CIM_ComputerSystem (Backbone Switch) ... 286
21.8.5 CIM_ComputerSystem (IFR Switch) ... 287
21.8.6 CIM_FCActiveConnection ... 287
21.8.7 CIM_FCPort (IFR FCPort) ... 288
21.8.8 CIM_ProtocolEndpoint ... 289
Annex A (informative) SMI-S Information Model ... 290
Annex B (informative) Structure of Fabric Profiles ... 291
Bibliography ... 311

Documents
Document Sharing Hub
Full document details: BS ISO/IEC 24775-6:2014

Figure 1 - Experimental maturity level tag 26
Figure 2 - Implemented maturity level tag 27
Figure 3 - Stable maturity level tag 27
Figure 4 - Deprecated tag 28
Figure 5 - Fabric Instance 29
Figure 6 - NPIV Instance 31
Figure 7 - Zoning Instance (AdminDomain) 32
Figure 8 - Zoning Instance (ComputerSystem) 33
Figure 9 - Predefined Fabric IndicationFilters and Collection 34
Figure 10 - FDMI Instance 111
Figure 11 - Instance Diagram 121
Figure 12 - Specialization of Security Authorization Subprofile for Membership Policy 128
Figure 13 - Specialization of Security Authorization Subprofile for Connectivity Policy 129
Figure 14 - Fabric View Class Capabilities 135
Figure 15 - Topology View Class 136
Figure 16 - FCSwitch View Class 136
Figure 17 - RegisteredProfile/Subprofile, AdminDomain, and ComputerSystem Relationships 143
Figure 18 - Two Virtual Fabric and Two Partitioning Systems 144
Figure 19 - Two Virtual Fabrics and One Partitioning System 144
Figure 20 - Switch Instance Diagram 148
Figure 21 - Trunking Instance Diagram 149
Figure 22 - Predefined Switch IndicationFilters and Collection 152
Figure 23 - Switch Configuration Data Instance 195
Figure 24 - Switch Blade Instance 199
Figure 25 - Predefined Blades IndicationFilters and Collection 200
Figure 26 - Switch ComputerSystem and Partitioning System 211
Figure 27 - Switch and Partitioning System and Partitioning Ports 211
Figure 28 - Underlying System Port Settings and Capabilities 212
Figure 29 - FC Extender Node Instance 221
Figure 30 - FC Extender Group Instance 222
Figure 31 - Predefined Extender IndicationFilters and Collection 223
Figure 32 - SAS Expander Instance Diagram 265
Figure 33 - N Port Virtualizer 272
Figure 34 - IFR Switch Topology 282
Figure 35 - Inter Fabric Routing Ports 284
Figure B.1 - Structure of the Fabric Part Profiles 291
Figure B.2 - AdminDomain Properties 294
Figure B.3 - Associations on AdminDomains 296
Figure B.4 - Properties of various Switches 298
Figure B.5 - Associations on Switches 300
Figure B.6 - General ComputerSystem Properties 302
Figure B.7 - General ComputerSystem Associations 304
Figure B.8 - Switch FCPort Properties 306
Figure B.9 - Switch FCPort Associations 307
Figure B.10 - Non-Switch Port Properties 309
Figure B.11 - Non-Switch Port Associations 310

Documents
Document Sharing Hub
Full document details: BS ISO/IEC 24775-6:2014

Table 1 - Supported Profiles for Fabric 35
Table 2 - Port OperationalStatus 36
Table 3 - OperationalStatus for ComputerSystem 36
Table 4 - CIM Elements for Fabric 41
Table 5 - SMI Referenced Properties/Methods for CIM_ActiveConnection 47
Table 6 - SMI Referenced Properties/Methods for CIM_AdminDomain (Fabric) 48
Table 7 - SMI Referenced Properties/Methods for CIM_AdminDomain (SAN) 48
Table 8 - SMI Referenced Properties/Methods for CIM_Component (Platform to Fabric) 49
Table 9 - SMI Referenced Properties/Methods for CIM_Component (Switch to Fabric) 49
Table 10 - SMI Referenced Properties/Methods for CIM_ComputerSystem (Host Platform) 50
Table 11 - SMI Referenced Properties/Methods for CIM_ComputerSystem (Partitioned Switch) 50
Table 12 - SMI Referenced Properties/Methods for CIM_ComputerSystem (Storage Platform) 51
Table 13 - SMI Referenced Properties/Methods for CIM_ComputerSystem (Switch) 52
Table 14 - SMI Referenced Properties/Methods for CIM_ConnectivityCollection 53
Table 15 - SMI Referenced Properties/Methods for CIM_ContainedDomain 53
Table 16 - SMI Referenced Properties/Methods for CIM_DeviceSAPImplementation (Non-Switch to FCPort) 53
Table 17 - SMI Referenced Properties/Methods for CIM_DeviceSAPImplementation (Switch to FCPort) 54
Table 18 - SMI Referenced Properties/Methods for CIM_ElementCapabilities (ZoneCapabilities to Fabric) 54
Table 19 - SMI Referenced Properties/Methods for CIM_ElementCapabilities (ZoneCapabilities to Switch) 54
Table 20 - SMI Referenced Properties/Methods for CIM_ElementSettingData (ZoneMembershipSettingData to Zone) 55
Table 21 - SMI Referenced Properties/Methods for CIM_FCActiveConnection 55
Table 22 - SMI Referenced Properties/Methods for CIM_FCPort (Host FCPort) 56
Table 23 - SMI Referenced Properties/Methods for CIM_FCPort (Host NPIV FCPort) 57
Table 24 - SMI Referenced Properties/Methods for CIM_FCPort (Partitioned Switch FCPort) 58
Table 25 - SMI Referenced Properties/Methods for CIM_FCPort (Storage FCPort) 59
Table 26 - SMI Referenced Properties/Methods for CIM_FCPort (Switch FCPort) 60
Table 27 - SMI Referenced Properties/Methods for CIM_FilterCollection (Fabric Predefined FilterCollection) 61
Table 28 - SMI Referenced Properties/Methods for CIM_HostedAccessPoint (AdminDomain to ProtocolEndpoint) 61
Table 29 - SMI Referenced Properties/Methods for CIM_HostedAccessPoint (ComputerSystem to ProtocolEndpoint) 62
Table 30 - SMI Referenced Properties/Methods for CIM_HostedCollection (Fabric to ConnectivityCollection) 62
Table 31 - SMI Referenced Properties/Methods for CIM_HostedCollection (Fabric to predefined FilterCollection) 62
Table 32 - SMI Referenced Properties/Methods for CIM_HostedCollection (System to LogicalPortGroup) 63
Table 33 - SMI Referenced Properties/Methods for CIM_HostedCollection (Zones or ZoneSets to Fabric) 63
Table 34 - SMI Referenced Properties/Methods for CIM_HostedCollection (Zones or ZoneSets to Switch) 63
Table 35 - SMI Referenced Properties/Methods for CIM_HostedDependency 64
Table 36 - SMI Referenced Properties/Methods for CIM_IndicationFilter (Fabric ComputerSystem Creation) 64

AVA Documents
Document Sharing Hub
Full document details: BS ISO/IEC 24775-6:2014

Table 37 - SMI Referenced Properties/Methods for CIM_IndicationFilter (Fabric ComputerSystem Deletion) ... 65
Table 38 - SMI Referenced Properties/Methods for CIM_IndicationFilter (Fabric ComputerSystem OperationalStatus) ... 66
Table 39 - SMI Referenced Properties/Methods for CIM_IndicationFilter (Fabric FCPort Creation) ... 67
Table 40 - SMI Referenced Properties/Methods for CIM_IndicationFilter (Fabric FCPort Deletion) ... 68
Table 41 - SMI Referenced Properties/Methods for CIM_IndicationFilter (Fabric FCPort OperationalStatus) ... 69
Table 42 - SMI Referenced Properties/Methods for CIM_IndicationFilter (Fabric Fabric Added or Removed) ... 70
Table 43 - SMI Referenced Properties/Methods for CIM_IndicationFilter (Fabric Fabric Merge or Segmentation) ... 71
Table 44 - SMI Referenced Properties/Methods for CIM_IndicationFilter (Fabric Switch Added or Removed) ... 72
Table 45 - SMI Referenced Properties/Methods for CIM_IndicationFilter (Fabric Switch Status Changed) ... 73
Table 46 - SMI Referenced Properties/Methods for CIM_IndicationFilter (Fabric Zone Database Changed) ... 74
Table 47 - SMI Referenced Properties/Methods for CIM_IndicationFilter (Fabric ZoneSet Activated) ... 75
Table 48 - SMI Referenced Properties/Methods for CIM_IndicationFilter (WQL Fabric ComputerSystem OperationalStatus) ... 76
Table 49 - SMI Referenced Properties/Methods for CIM_IndicationFilter (WQL Fabric FCPort OperationalStatus) ... 77
Table 50 - SMI Referenced Properties/Methods for CIM_LogicalPortGroup ... 78
Table 51 - SMI Referenced Properties/Methods for CIM_MemberOfCollection (ConnectivityCollection to ProtocolEndpoint) ... 78
Table 52 - SMI Referenced Properties/Methods for CIM_MemberOfCollection (LogicalPortGroup to FCPort) ... 78
Table 53 - SMI Referenced Properties/Methods for CIM_MemberOfCollection (Predefined Filter Collection to Fabric Filters) ... 79
Table 54 - SMI Referenced Properties/Methods for CIM_MemberOfCollection (ZoneSet to Zone) ... 79
Table 55 - SMI Referenced Properties/Methods for CIM_ProtocolEndpoint ... 79
Table 56 - SMI Referenced Properties/Methods for CIM_SystemDevice (Non-Switch FCPort to Fabric) ... 80
Table 57 - SMI Referenced Properties/Methods for CIM_SystemDevice (Non-Switch FCPort to Platform) ... 80
Table 58 - SMI Referenced Properties/Methods for CIM_SystemDevice (Switch FCPort to Switch) ... 81
Table 59 - SMI Referenced Properties/Methods for CIM_Zone (Active) ... 81
Table 60 - SMI Referenced Properties/Methods for CIM_Zone (Inactive) ... 81
Table 61 - SMI Referenced Properties/Methods for CIM_ZoneCapabilities ... 82
Table 62 - SMI Referenced Properties/Methods for CIM_ZoneMembershipSettingData ... 83
Table 63 - SMI Referenced Properties/Methods for CIM_ZoneSet (Active) ... 84
Table 64 - SMI Referenced Properties/Methods for CIM_ZoneSet (Inactive) ... 84
Table 65 - Supported Profiles for Enhanced Zoning and Enhanced Zoning Control ... 85
Table 66 - CIM Elements for Enhanced Zoning and Enhanced Zoning Control ... 89
Table 67 - SMI Referenced Properties/Methods for CIM_ElementSettingData (ZoneMembershipSettingData to NamedAddressCollection) ... 89
Table 68 - SMI Referenced Properties/Methods for CIM_HostedCollection (AdminDomain to Collection) ... 90
Table 69 - SMI Referenced Properties/Methods for CIM_HostedCollection (ComputerSystem to Collection) ... 90
Table 70 - SMI Referenced Properties/Methods for CIM_MemberOfCollection ... 90

AVA Documents
Document Sharing Hub
Full document details: BS ISO/IEC 24775-6:2014

Table 71 - SMI Referenced Properties/Methods for CIM_NamedAddressCollection ... 91
Table 72 - SMI Referenced Properties/Methods for CIM_ZoneService (Zone Service) ... 91
Table 73 - CIM Elements for Zone Control ... 108
Table 74 - SMI Referenced Properties/Methods for CIM_HostedService (Fabric (AdminDomain) to ZoneService) ... 109
Table 75 - SMI Referenced Properties/Methods for CIM_HostedService (Switch (ComputerSystem) to ZoneService) ... 109
Table 76 - SMI Referenced Properties/Methods for CIM_ZoneService (Zone Service) ... 110
Table 77 - CIM Elements for FDMI ... 112
Table 78 - SMI Referenced Properties/Methods for CIM_Component (Host Server to Fabric) ... 113
Table 79 - SMI Referenced Properties/Methods for CIM_ComputerSystem (Host Server) ... 113
Table 80 - SMI Referenced Properties/Methods for CIM_ControlledBy ... 113
Table 81 - SMI Referenced Properties/Methods for CIM_ElementSoftwareIdentity ... 114
Table 82 - SMI Referenced Properties/Methods for CIM_FCPort (Host FCPort) ... 114
Table 83 - SMI Referenced Properties/Methods for CIM_HostedCollection (System to LogicalPortGroup) ... 115
Table 84 - SMI Referenced Properties/Methods for CIM_InstalledSoftwareIdentity ... 115
Table 85 - SMI Referenced Properties/Methods for CIM_MemberOfCollection (LogicalPortGroup to FCPort) ... 116
Table 86 - SMI Referenced Properties/Methods for CIM_PhysicalPackage (HBA Package) ... 116
Table 87 - SMI Referenced Properties/Methods for CIM_PortController ... 117
Table 88 - SMI Referenced Properties/Methods for CIM_Product (HBA Product) ... 117
Table 89 - SMI Referenced Properties/Methods for CIM_ProductPhysicalComponent ... 117
Table 90 - SMI Referenced Properties/Methods for CIM_Realizes ... 118
Table 91 - SMI Referenced Properties/Methods for CIM_SoftwareIdentity (Driver) ... 118
Table 92 - SMI Referenced Properties/Methods for CIM_SoftwareIdentity (Firmware) ... 119
Table 93 - SMI Referenced Properties/Methods for CIM_SoftwareIdentity (Option ROM) ... 119
Table 94 - SMI Referenced Properties/Methods for CIM_SystemDevice (ComputerSystem to FCPort) ... 120
Table 95 - SMI Referenced Properties/Methods for CIM_SystemDevice (ComputerSystem to PortController) ... 120
Table 96 - CIM Elements for Fabric Path Performance ... 122
Table 97 - SMI Referenced Properties/Methods for CIM_ElementStatisticalData ... 123
Table 98 - SMI Referenced Properties/Methods for CIM_EndpointOfNetworkPipe ... 123
Table 99 - SMI Referenced Properties/Methods for CIM_HostedCollection ... 123
Table 100 - SMI Referenced Properties/Methods for CIM_HostedNetworkPipe ... 124
Table 101 - SMI Referenced Properties/Methods for CIM_MemberOfCollection ... 124
Table 102 - SMI Referenced Properties/Methods for CIM_Network ... 124
Table 103 - SMI Referenced Properties/Methods for CIM_NetworkPipe ... 125
Table 104 - SMI Referenced Properties/Methods for CIM_NetworkPortStatistics ... 125
Table 105 - SMI Referenced Properties/Methods for CIM_ProtocolEndpoint ... 126
Table 106 - SMI Referenced Properties/Methods for CIM_StatisticsCollection ... 126
Table 107 - CIM Elements for FabricSecurity ... 130
Table 108 - SMI Referenced Properties/Methods for CIM_AuthorizationService ... 130
Table 109 - SMI Referenced Properties/Methods for CIM_AuthorizedPrivilege ... 131
Table 110 - SMI Referenced Properties/Methods for CIM_AuthorizedSubject ... 131
Table 111 - SMI Referenced Properties/Methods for CIM_AuthorizedTarget ... 131
Table 112 - SMI Referenced Properties/Methods for CIM_HostedService ... 132
Table 113 - SMI Referenced Properties/Methods for CIM_ServiceAffectsElement (ManagedElement to Service) ... 132
Table 114 - SMI Referenced Properties/Methods for CIM_ServiceAffectsElement (StorageHardwareID to Service) ... 132
Table 115 - SMI Referenced Properties/Methods for CIM_ServiceAvailableToElement

AVA Documents
Document Sharing Hub
Full document details: BS ISO/IEC 24775-6:2014

(Fabric AdminDomain to Service) ... 133
Table 116 - SMI Referenced Properties/Methods for CIM_StorageHardwareID ... 133
Table 117 - CIM Elements for Fabric Views ... 137
Table 118 - SMI Referenced Properties/Methods for CIM_ElementCapabilities (View Capabilities) ... 138
Table 119 - SMI Referenced Properties/Methods for SNIA_BaseInstance (View to FC Port) ... 138
Table 120 - SMI Referenced Properties/Methods for SNIA_BaseInstance (View to Switch) ... 139
Table 121 - SMI Referenced Properties/Methods for SNIA_ComponentView (FCSwitchView to Fabric) ... 139
Table 122 - SMI Referenced Properties/Methods for SNIA_ComponentView (TopologyView to Fabric) ... 140
Table 123 - SMI Referenced Properties/Methods for SNIA_FCSwitchView ... 140
Table 124 - SMI Referenced Properties/Methods for SNIA_TopologyView ... 141
Table 125 - SMI Referenced Properties/Methods for SNIA_ViewCapabilities ... 142
Table 126 - Supported Profiles for FabricVirtualFabrics ... 145
Table 127 - CIM Elements for FabricVirtualFabrics ... 145
Table 128 - SMI Referenced Properties/Methods for CIM_Component (AdminDomain to Partitioning CS) ... 146
Table 129 - SMI Referenced Properties/Methods for CIM_ElementConformsToProfile (SAN AdminDomain to Virtual Fabrics RegisteredProfile) ... 146
Table 130 - DetailedPortState for FCPort ... 150
Table 131 - PortAvailability for FCPort ... 150
Table 132 - Supported Profiles for Switch ... 153
Table 133 - CIM Elements for Switch ... 170
Table 134 - SMI Referenced Properties/Methods for CIM_ComputerSystem (Partitioned Switch) ... 173
Table 135 - SMI Referenced Properties/Methods for CIM_ComputerSystem (Switch) ... 174
Table 136 - SMI Referenced Properties/Methods for CIM_ComputerSystemPackage ... 175
Table 137 - SMI Referenced Properties/Methods for CIM_ElementCapabilities (FCPort to FCPortCapabilities) ... 175
Table 138 - SMI Referenced Properties/Methods for CIM_ElementCapabilities (System to FCSwitchCapabilities) ... 175
Table 139 - SMI Referenced Properties/Methods for CIM_ElementSettingData (FCPortSettings to FCPort) ... 176
Table 140 - SMI Referenced Properties/Methods for CIM_ElementSettingData (FCSwitchSettings to ComputerSystem) ... 176
Table 141 - SMI Referenced Properties/Methods for CIM_ElementStatisticalData (FCPortRateStatistics to FCPort) ... 176
Table 142 - SMI Referenced Properties/Methods for CIM_ElementStatisticalData (FCPortStatistics to FCPort) ... 177
Table 143 - SMI Referenced Properties/Methods for CIM_FCPort (Partitioned Switch FCPort) ... 177
Table 144 - SMI Referenced Properties/Methods for CIM_FCPort (Switch FCPort) ... 178
Table 145 - SMI Referenced Properties/Methods for CIM_FCPortCapabilities ... 180
Table 146 - SMI Referenced Properties/Methods for CIM_FCPortRateStatistics ... 180
Table 147 - SMI Referenced Properties/Methods for CIM_FCPortSettings ... 181
Table 148 - SMI Referenced Properties/Methods for CIM_FCPortStatistics ... 181
Table 149 - SMI Referenced Properties/Methods for CIM_FCSwitchCapabilities ... 183
Table 150 - SMI Referenced Properties/Methods for CIM_FCSwitchSettings ... 184
Table 151 - SMI Referenced Properties/Methods for CIM_FilterCollection (Switch Predefined FilterCollection) ... 185
Table 152 - SMI Referenced Properties/Methods for CIM_HostedCollection (Redundancy Set) ... 185
Table 153 - SMI Referenced Properties/Methods for CIM_HostedCollection (Statistics Collection) ... 185
Table 154 - SMI Referenced Properties/Methods for CIM_HostedCollection (Switch to predefined FilterCollection) ... 186

Documents
Document Sharing Hub
Full document details: BS ISO/IEC 24775-6:2014

Table 155 - SMI Referenced Properties/Methods for CIM_IndicationFilter (Switch ComputerSystem Creation) 186
Table 156 - SMI Referenced Properties/Methods for CIM_IndicationFilter (Switch ComputerSystem Deletion) 187
Table 157 - SMI Referenced Properties/Methods for CIM_IndicationFilter (Switch ComputerSystem OperationalStatus) 188
Table 158 - SMI Referenced Properties/Methods for CIM_IndicationFilter (Switch FCPort OperationalStatus) 189
Table 159 - SMI Referenced Properties/Methods for CIM_IndicationFilter (WQL Switch ComputerSystem OperationalStatus) 190
Table 160 - SMI Referenced Properties/Methods for CIM_IndicationFilter (WQL Switch FCPort OperationalStatus) 191
Table 161 - SMI Referenced Properties/Methods for CIM_MemberOfCollection (FCPort to RedundancySet) 191
Table 162 - SMI Referenced Properties/Methods for CIM_MemberOfCollection (NetworkPortStatistics to StatisticalCollection) 192
Table 163 - SMI Referenced Properties/Methods for CIM_MemberOfCollection (Predefined Filter Collection to Switch Filters) 192
Table 164 - SMI Referenced Properties/Methods for CIM_ProtocolEndpoint 192
Table 165 - SMI Referenced Properties/Methods for CIM_RedundancySet 193
Table 166 - SMI Referenced Properties/Methods for CIM_StatisticsCollection 193
Table 167 - SMI Referenced Properties/Methods for CIM_SystemDevice 194
Table 168 - CIM Elements for Switch Configuration Data 196
Table 169 - SMI Referenced Properties/Methods for CIM_ComputerSystem 197
Table 170 - SMI Referenced Properties/Methods for CIM_ConfigurationData 197
Table 171 - SMI Referenced Properties/Methods for CIM_ElementSettingData 198
Table 172 - CIM Elements for Blades 201
Table 173 - SMI Referenced Properties/Methods for CIM_FilterCollection (Blades Predefined FilterCollection) 202
Table 174 - SMI Referenced Properties/Methods for CIM_HostedCollection (Switch to Blades predefined FilterCollection) 203
Table 175 - SMI Referenced Properties/Methods for CIM_IndicationFilter (Blades LogicalModule Creation) 203
Table 176 - SMI Referenced Properties/Methods for CIM_IndicationFilter (Blades LogicalModule Deletion) 204
Table 177 - SMI Referenced Properties/Methods for CIM_IndicationFilter (Blades LogicalModule OperationalStatus) 205
Table 178 - SMI Referenced Properties/Methods for CIM_IndicationFilter (WQL Blades LogicalModule OperationalStatus) 206
Table 179 - SMI Referenced Properties/Methods for CIM_LogicalModule 207
Table 180 - SMI Referenced Properties/Methods for CIM_MemberOfCollection (Blades FilterCollection to Switch FilterCollection) 207
Table 181 - SMI Referenced Properties/Methods for CIM_MemberOfCollection (Predefined Filter Collection to Blades Filters) 208
Table 182 - SMI Referenced Properties/Methods for CIM_ModulePort 208
Table 183 - SMI Referenced Properties/Methods for CIM_PhysicalPackage (Logical Module) 208
Table 184 - SMI Referenced Properties/Methods for CIM_Product (Blade) 209
Table 185 - SMI Referenced Properties/Methods for CIM_ProductPhysicalComponent 209
Table 186 - SMI Referenced Properties/Methods for CIM_Realizes (Logical Module Package) 210
Table 187 - SMI Referenced Properties/Methods for CIM_SystemDevice (Logical Module) 210
Table 188 - Supported Profiles for FabricSwitchPartitioning 212
Table 189 - CIM Elements for FabricSwitchPartitioning 213
Table 190 - SMI Referenced Properties/Methods for CIM_ComputerSystem (Partitioned) 214
Table 191 - SMI Referenced Properties/Methods for CIM_ComputerSystem (Partitioning) 214
Table 192 - SMI Referenced Properties/Methods for CIM_ElementCapabilities

Documents
Document Sharing Hub
Full document details: BS ISO/IEC 24775-6:2014

(Association between NetworkPort and NetworkPortCapabilities) 215
Table 193 - SMI Referenced Properties/Methods for CIM_ElementConformsToProfile (Partitioning ComputerSystem to Switch Partitioning RegisteredProfile) 215
Table 194 - SMI Referenced Properties/Methods for CIM_ElementSettingData (Association between NetworkPort and NetworkPortSettings) 215
Table 195 - SMI Referenced Properties/Methods for CIM_FCPort (Partitioned) 216
Table 196 - SMI Referenced Properties/Methods for CIM_HostedDependency (NetworkPort to FCPort) 217
Table 197 - SMI Referenced Properties/Methods for CIM_HostedDependency (Partitioning CS to Partitioned CS) 217
Table 198 - SMI Referenced Properties/Methods for CIM_NetworkPort (Partitioning) 217
Table 199 - SMI Referenced Properties/Methods for CIM_NetworkPortCapabilities 218
Table 200 - SMI Referenced Properties/Methods for CIM_NetworkPortSettings 218
Table 201 - SMI Referenced Properties/Methods for CIM_SystemDevice (FCPort to Partitioned ComputerSystem) 219
Table 202 - SMI Referenced Properties/Methods for CIM_SystemDevice (NetworkPort to ComputerSystem) 219
Table 203 - Supported Profiles for Extender 224
Table 204 - CIM Elements for Extender 234
Table 205 - SMI Referenced Properties/Methods for CIM_BindsTo (IPPE to PE) 237
Table 206 - SMI Referenced Properties/Methods for CIM_BindsTo (IPPE to RemoteSAP) 238
Table 207 - SMI Referenced Properties/Methods for CIM_BindsTo (IPPE to RemoteSAP) 238
Table 208 - SMI Referenced Properties/Methods for CIM_BindsTo (PE to RemotePort) 238
Table 209 - SMI Referenced Properties/Methods for CIM_BindsTo (TCPPE to IPPE) 239
Table 210 - SMI Referenced Properties/Methods for CIM_BindsTo (TCPPE to PE) 239
Table 211 - SMI Referenced Properties/Methods for CIM_BindsTo (TCPPE to RemotePort) 239
Table 212 - SMI Referenced Properties/Methods for CIM_Component 240
Table 213 - SMI Referenced Properties/Methods for CIM_ComputerSystem (Extender Node) 240
Table 214 - SMI Referenced Properties/Methods for CIM_DeviceSAPImplementation 240
Table 215 - SMI Referenced Properties/Methods for CIM_ElementSettingData (IPPE to IPSettings) 241
Table 216 - SMI Referenced Properties/Methods for CIM_ElementSettingData (PE to FCIPSettings) 241
Table 217 - SMI Referenced Properties/Methods for CIM_ElementSettingData (System to FCIPSettings) 242
Table 218 - SMI Referenced Properties/Methods for CIM_ElementSettingData (System to IPSettings) 242
Table 219 - SMI Referenced Properties/Methods for CIM_ElementSettingData (System to TCPSettings) 242
Table 220 - SMI Referenced Properties/Methods for CIM_ElementSettingData (TCPPE to TCPSettings) 243
Table 221 - SMI Referenced Properties/Methods for CIM_ElementStatisticalData (EthernetPort to EthernetPortStatistics) 243
Table 222 - SMI Referenced Properties/Methods for CIM_ElementStatisticalData (FCPort to FCPortStatistics) 243
Table 223 - SMI Referenced Properties/Methods for CIM_ElementStatisticalData (IPPE to IPEndpointStatistics) 244
Table 224 - SMI Referenced Properties/Methods for CIM_ElementStatisticalData (System to TCPStatisticalData) 244
Table 225 - SMI Referenced Properties/Methods for CIM_ElementStatisticalData (TCPPE to TCPEndpointStatistics) 244
Table 226 - SMI Referenced Properties/Methods for CIM_EndpointOfNetworkPipe (PE to NetworkPipe) 245
Table 227 - SMI Referenced Properties/Methods for CIM_EndpointOfNetworkPipe

AVA Documents
Document Sharing Hub
Full document details: BS ISO/IEC 24775-6:2014

(TCPPE to NetworkPipe) ... 245
Table 228 - SMI Referenced Properties/Methods for CIM_EthernetPort ... 245
Table 229 - SMI Referenced Properties/Methods for CIM_EthernetPortStatistics ... 246
Table 230 - SMI Referenced Properties/Methods for CIM_FCIPSettings ... 247
Table 231 - SMI Referenced Properties/Methods for CIM_FCPort ... 247
Table 232 - SMI Referenced Properties/Methods for CIM_FCPortStatistics ... 248
Table 233 - SMI Referenced Properties/Methods for CIM_FilterCollection (Extender Predefined FilterCollection) ... 250
Table 234 - SMI Referenced Properties/Methods for CIM_HostedAccessPoint (ComputerSystem to IPProtocolEndpoint) ... 250
Table 235 - SMI Referenced Properties/Methods for CIM_HostedAccessPoint (ComputerSystem to TCPProtocolEndpoint) ... 251
Table 236 - SMI Referenced Properties/Methods for CIM_HostedAccessPoint (ComputerSystem to ProtocolEndpoint) ... 251
Table 237 - SMI Referenced Properties/Methods for CIM_HostedCollection (Extender to predefined FilterCollection) ... 251
Table 238 - SMI Referenced Properties/Methods for CIM_HostedNetworkPipe ... 252
Table 239 - SMI Referenced Properties/Methods for CIM_IPEndpointStatistics ... 252
Table 240 - SMI Referenced Properties/Methods for CIM_IPProtocolEndpoint ... 253
Table 241 - SMI Referenced Properties/Methods for CIM_IPSettings ... 253
Table 242 - SMI Referenced Properties/Methods for CIM_IndicationFilter (Extender ComputerSystem Creation) ... 254
Table 243 - SMI Referenced Properties/Methods for CIM_IndicationFilter (Extender ComputerSystem Deletion) ... 255
Table 244 - SMI Referenced Properties/Methods for CIM_IndicationFilter (Extender ComputerSystem OperationalStatus) ... 256
Table 245 - SMI Referenced Properties/Methods for CIM_IndicationFilter (WQL Extender ComputerSystem OperationalStatus) ... 257
Table 246 - SMI Referenced Properties/Methods for CIM_LANEndpoint ... 257
Table 247 - SMI Referenced Properties/Methods for CIM_MemberOfCollection (Predefined Filter Collection to Extender Filters) ... 258
Table 248 - SMI Referenced Properties/Methods for CIM_Network ... 258
Table 249 - SMI Referenced Properties/Methods for CIM_NetworkPipe ... 259
Table 250 - SMI Referenced Properties/Methods for CIM_NetworkPipeComposition ... 259
Table 251 - SMI Referenced Properties/Methods for CIM_ProtocolEndpoint ... 259
Table 252 - SMI Referenced Properties/Methods for CIM_RemotePort ... 260
Table 253 - SMI Referenced Properties/Methods for CIM_RemoteServiceAccessPoint ... 260
Table 254 - SMI Referenced Properties/Methods for CIM_SystemDevice (System to EthernetPort) ... 261
Table 255 - SMI Referenced Properties/Methods for CIM_SystemDevice (System to FCPort) ... 261
Table 256 - SMI Referenced Properties/Methods for CIM_TCPEndpointStatistics ... 261
Table 257 - SMI Referenced Properties/Methods for CIM_TCPProtocolEndpoint ... 262
Table 258 - SMI Referenced Properties/Methods for CIM_TCPSettings ... 262
Table 259 - SMI Referenced Properties/Methods for CIM_TCPStatisticalData ... 263
Table 260 - Supported Profiles for SAS Expander ... 266
Table 261 - CIM Elements for SAS Expander ... 267
Table 262 - SMI Referenced Properties/Methods for CIM_ComputerSystem ... 267
Table 263 - SMI Referenced Properties/Methods for CIM_ConcreteComponent ... 268
Table 264 - SMI Referenced Properties/Methods for CIM_ElementSoftwareIdentity ... 268
Table 265 - SMI Referenced Properties/Methods for CIM_Product ... 269
Table 266 - SMI Referenced Properties/Methods for CIM_ProductElementComponent ... 269
Table 267 - SMI Referenced Properties/Methods for CIM_SASPort ... 269
Table 268 - SMI Referenced Properties/Methods for CIM_SoftwareIdentity ... 270
Table 269 - SMI Referenced Properties/Methods for CIM_SystemDevice (Port) ... 270

AVA Documents
Document Sharing Hub
Full document details: BS ISO/IEC 24775-6:2014

Table 270 - SMI Referenced Properties/Methods for CIM_SystemDevice (SASPHY) ... 270
Table 271 - SMI Referenced Properties/Methods for SNIA_SASPHY ... 271
Table 272 - Supported Profiles for N Port Virtualizer ... 273
Table 273 - CIM Elements for N Port Virtualizer ... 273
Table 274 - SMI Referenced Properties/Methods for CIM_Component (N Port Virtualizer to Fabric) ... 274
Table 275 - SMI Referenced Properties/Methods for CIM_ComputerSystem (N Port Virtualizer) ... 275
Table 276 - SMI Referenced Properties/Methods for CIM_ComputerSystemPackage (N Port Virtualizer to Physical Package) ... 275
Table 277 - SMI Referenced Properties/Methods for CIM_DeviceSAPImplementation (ProtocolEndpoint to Gateway FCPort) ... 276
Table 278 - SMI Referenced Properties/Methods for CIM_DeviceSAPImplementation (ProtocolEndpoint to NPIV FCPort) ... 276
Table 279 - SMI Referenced Properties/Methods for CIM_FCActiveConnection (Gateway) ... 276
Table 280 - SMI Referenced Properties/Methods for CIM_FCActiveConnection (N Port Virtualization) ... 277
Table 281 - SMI Referenced Properties/Methods for CIM_FCPort (Fabric NPIV) ... 277
Table 282 - SMI Referenced Properties/Methods for CIM_FCPort (Gateway) ... 278
Table 283 - SMI Referenced Properties/Methods for CIM_HostedAccessPoint (N Port Virtualizer System to ProtocolEndpoint) ... 279
Table 284 - SMI Referenced Properties/Methods for CIM_LogicalIdentity (NPIV Port to Switch Port) ... 280
Table 285 - SMI Referenced Properties/Methods for CIM_ProtocolEndpoint (N Port Virtualizer) ... 280
Table 286 - SMI Referenced Properties/Methods for CIM_SystemDevice (N Port Virtualizer Gateway FCPort to Gateway System) ... 280
Table 287 - SMI Referenced Properties/Methods for CIM_SystemDevice (N Port Virtualizer NPIV FCPort to Gateway System) ... 281
Table 288 - CIM Elements for Inter Fabric Routing ... 285
Table 289 - SMI Referenced Properties/Methods for CIM_Component (Backbone Switch to Fabric) ... 285
Table 290 - SMI Referenced Properties/Methods for CIM_Component (IFR Switch to Fabric) ... 286
Table 291 - SMI Referenced Properties/Methods for CIM_ComputerSystem (Backbone Switch) ... 286
Table 292 - SMI Referenced Properties/Methods for CIM_ComputerSystem (IFR Switch) ... 287
Table 293 - SMI Referenced Properties/Methods for CIM_FCActiveConnection ... 288
Table 294 - SMI Referenced Properties/Methods for CIM_FCPort (IFR FCPort) ... 288
Table 295 - SMI Referenced Properties/Methods for CIM_ProtocolEndpoint ... 289
Table B.1 - AdminDomain Properties ... 293
Table B.2 - AdminDomain Associations ... 294
Table B.3 - Switch ComputerSystem Properties ... 297
Table B.4 - Switch ComputerSystem Associations ... 298
Table B.5 - Non-Switch ComputerSystem Properties ... 301
Table B.6 - Non-Switch ComputerSystem Associations ... 302
Table B.7 - Switch FCPort Properties ... 304
Table B.8 - Switch FCPort Associations ... 306
Table B.9 - Non-Switch Port Properties ... 308
Table B.10 - Non-Switch Port Associations ... 309

Documents
Document Sharing Hub
Full document details: BS ISO/IEC 24775-6:2014

INFORMATION TECHNOLOGY –
STORAGE MANAGEMENT –
Part 6: Fabric

FOREWORD

1) ISO (the International Organization for Standardization) and IEC (the International Electrotechnical Commission) form the specialized system for worldwide standardization. National bodies that are members of ISO or IEC participate in the development of International Standards through technical committees established by the respective organization to deal with particular fields of technical activity. ISO and IEC technical committees collaborate in fields of mutual interest. Other international organizations, governmental and non-governmental, in liaison with ISO and IEC, also take part in the work. In the field of information technology, ISO and IEC have established a joint technical committee, ISO/IEC JTC 1.

2) The formal decisions or agreements of IEC and ISO on technical matters express, as nearly as possible, an international consensus of opinion on the relevant subjects since each technical committee has representation from all interested IEC National Committees and ISO member bodies.

3) IEC, ISO and ISO/IEC publications have the form of recommendations for international use and are accepted by IEC National Committees and ISO member bodies in that sense. While all reasonable efforts are made to ensure that the technical content of IEC, ISO and ISO/IEC publications is accurate, IEC or ISO cannot be held responsible for the way in which they are used or for any misinterpretation by any end user.

4) In order to promote international uniformity, IEC National Committees and ISO member bodies undertake to apply IEC, ISO and ISO/IEC publications transparently to the maximum extent possible in their national and regional publications. Any divergence between any ISO, IEC or ISO/IEC publication and the corresponding national or regional publication should be clearly indicated in the latter.

5) ISO and IEC do not provide any attestation of conformity. Independent certification bodies provide conformity assessment services and, in some areas, access to IEC marks of conformity. ISO or IEC are not responsible for any services carried out by independent certification bodies.

6) All users should ensure that they have the latest edition of this publication.

7) No liability shall attach to IEC or ISO or its directors, employees, servants or agents including individual experts and members of their technical committees and IEC National Committees or ISO member bodies for any personal injury, property damage or other damage of any nature whatsoever, whether direct or indirect, or for costs (including legal fees) and expenses arising out of the publication of, use of, or reliance upon, this ISO/IEC publication or any other IEC, ISO or ISO/IEC publications.

8) Attention is drawn to the normative references cited in this publication. Use of the referenced publications is indispensable for the correct application of this publication.

9) Attention is drawn to the possibility that some of the elements of this ISO/IEC publication may be the subject of patent rights. ISO and IEC shall not be held responsible for identifying any or all such patent rights.

International Standard ISO/IEC 24775-6 was prepared by subcommittee 25: Interconnection of information technology equipment, of ISO/IEC joint technical committee 1: Information technology.

This International Standard, together with ISO/IEC 24775-1 to ISO/IEC 24775-5 and ISO/IEC 24775-7 and ISO/IEC 24775-8, replaces ISO/IEC 24775, second edition, published in 2011, and constitutes a technical revision.

This edition includes the following significant technical changes with respect to the previous edition:

a) reorganization into eight parts;

b) maturity identification using stages; and

c) new profiles.

The list of all currently available parts of the ISO/IEC 24775 series, under the general title *Information technology – Storage management*, can be found on the IEC web site.

Documents
Document Sharing Hub

Full document details: BS ISO/IEC 24775-6:2014

This International Standard has been approved by vote of the member bodies, and the voting results may be obtained from the address given on the second title page.

This publication has been drafted in accordance with the ISO/IEC Directives, Part 2.

IMPORTANT – The "colour inside" logo on the cover page of this publication indicates that it contains colours which are considered to be useful for the correct understanding of its contents. Users should therefore print this publication using a colour printer.

Documents
Document Sharing Hub

Full document details: BS ISO/IEC 24775-6:2014

Introduction

This part of ISO/IEC 24775 defines management profiles for Autonomous (top level) profiles for programs and devices whose central function is providing support for storage networking. The standard includes fabric management including topology and device management for switches. This standard also provides management of extenders that pass fibre channel frames over other protocols as well as a gateway that maps and translates iSCSI to Fibre Channel. As part of fabric management, this International Standard also has controls for fibre channel zoning and fibre channel security.

Parts of this Standard

This International Standard is subdivided into the following parts:

- *Information technology – Storage management – Part 1: Overview*
- *Information technology – Storage management – Part 2: Common architecture*
- *Information technology – Storage management – Part 3: Common profiles*
- *Information technology – Storage management – Part 4: Block devices*
- *Information technology – Storage management – Part 5: Filesystems*
- *Information technology – Storage management – Part 6: Fabric*
- *Information technology – Storage management – Part 7: Host elements*
- *Information technology – Storage management – Part 8: Media libraries*

Changes since the Last Edition

The changes since ISO/IEC 24775:2011 fall into three broad categories:

- **Improved organization**. The stand-alone standard has been split into eight parts to provide more information more easily. The parts are:
  - *Part 1 Overview*: The overview book provides a high level overview of the standard.
  - *Part 2 Common Architecture*: This part covers general information about the interface, such as security and protocols.
  - *Part 3 Common Profiles*: This part covers component profiles that extend profiles in other books, such as target ports and job control.
  - *Part 4 Block Devices*: This part covers storage profiles that support various forms of disk storage.
  - *Part 5 Filesystems*: This part covers profiles that support filesystems, such as NAS (Network Attached Storage).
  - *Part 6 Fabric*: This part covers profiles that deal with interconnection of host servers and storage devices, such as switches.
  - *Part 7 Host Elements*: This part covers profiles for storage software on host servers, such as disk partitioning and Host Hardware RAID controllers.
  - *Part 8 Media Libraries*: This part covers profiles that deal with removable media such as tape libraries.
- **Maturity identification.** As material is added to the standard it goes through various stages of maturity. The initial stage is *Experimental*, which is material that has not yet been implemented and is subject to change. The other stages indicate the degree of implementations. The stages are:
  - **Experimental**: Full design review, no commercial implementations.
  - **Implemented**: Initial implementations available, may be removed at minor revision.
  - **Stable**: Three or more vendors have implemented the identified material, backward compatibility assured, removed only at major revision.

AVA Documents
Document Sharing Hub

Full document details: BS ISO/IEC 24775-6:2014

- **Finalized**: Relies solely on Finalized content, deprecated only at major revision.
- **Deprecated**: Obsolete material, may be removed in future revisions.

  For a more detailed explanation of each maturity level and its typographical indication, see Clause 4 Typographical Conventions.

- **Expanded scope.** The range of SAN components modeled by the profiles defined in the parts has been greatly expanded.
  - New profiles include:
    - *Part 3 Common Profiles:* Serial Attached SCSI (SAS) Target Port, Serial ATA (SATA) Target Ports, SB Target Port, SAS Initiator Ports, ATA Initiator Ports, FC-SB-x Initiator Ports, FCoE Initiator Ports, Power Supply, Fan, Sensors, Base Server, Media Access Device, Storage Enclosure, Software Inventory, Profile Registration, Proxy Server System Management, Operational Power.
    - *Part 4 Block Devices:* Block Storage Views, CKD Block Services, Erasure, Storage Server Asymmetry, Volume Composition, Storage Element Protection, Replication Services, Pools from Volumes, Group Masking and Mapping, Thin Provisioning.
    - *Part 5 Filesystems:* File Export, File Server Manipulation, File Storage, Filesystem, Filesystem Copy Services, Filesystem Performance, Filesystem Quotas, NAS Network Port, Host Filesystem, Filesystem Remote Copy Services.
    - *Part 6 Fabric:* Fibre Channel Security, Fabric Views, Virtual Fabrics, Switch Partitioning, SAS Expander, N Port Virtualizer, Inter Fabric Routing.
    - *Part 7 Host Elements:* Storage HBA, Host Hardware RAID Controller.
    - *Part 8 Media Libraries:* Partitioned Tape Library, Virtual Tape Library, Virtual Tape Library Copy and Library Views.
  - The following experimental profiles were removed from the International Standard:
    - *Part 3 Common Profiles:* Security, 3rd Party Authentication, Authorization, Credential Management, Identity Management, Security Role Based Access Control and Security Resource Ownership.
    - *Part 4 Block Devices:* Pool Management Policy.
  - The following profiles were deprecated:
    - *Part 3 Common Profiles:* Cascading (replaced by direct use of cascading classes).
    - *Part 4 Block Devices:* Volume Management (and not replaced).
    - *Part 6 Fabric:* Router (and not replaced).
    - *Part 7 Host Elements:* FC HBA (replaced by Storage HBA), SB Multipath Management (and not replaced).
    - *Part 8 Media Libraries:* InterLibraryPort Connection (and not replaced).
  - In addition, many of the existing profiles have been enhanced.

This International Standard was prepared by the SNIA (Storage Networking Industry Association)[1]. The standard is often referred to as ***SMI-S*** (*Storage Management Initiative Specification*).

1. Storage Networking Industry Association, 425 Market Street, Suite 1020, San Francisco, CA 94105, U.S.A. http://www.snia.org

AVA Documents
Document Sharing Hub
Full document details: BS ISO/IEC 24775-6:2014

INFORMATION TECHNOLOGY – STORAGE MANAGEMENT – Part 6: Fabric

1 Scope

This part of ISO/IEC 24775 defines management profiles for Autonomous (top level) profiles for programs and devices whose central function is providing support for storage networking. This standard includes four autonomous profiles:

- Fabric

  This profile defines the model and functions of a storage network including topology and zoning control.

- Switch

  This profile defines the model and functions of a Fibre Channel Switch including state, status, and control of the device and its connections and product information,

- Extender

  This profile defines the model and functions of a networking device that allows for fibre channel to be extended over other networks, and specifically over IP (FCIP).

- iSCSI to FC Gateway

  This profile defines the model and functions of a networking device that maps and switches iSCSI frames from an IP network to a fibre channel fabric.

2 Normative references

The following documents, in whole or in part, are normatively referenced in the document and are indispensible for its application. For dated references, only the edition cited applies. For undated references, the latest edition of the referenced document, including any amendments, applies.

ISO/IEC 24775-2:2014, *Information technology – Storage management – Part 2: Common architecture*

ISO/IEC 24775-3:2014, *Information technology – Storage management – Part 3: Common profiles*

ISO/IEC 24775-7:2014, *Information technology – Storage management – Part 7: Host elements*

ISO/IEC 24775-8:2014, *Information technology – Storage management – Part 8: Media libraries*

3 Terms and definitions

For the purposes of this document, the terms and definitions given in ISO/IEC 24775-2, apply.

Documents
Document Sharing Hub
Full document details: BS ISO/IEC 24775-6:2014

4 Typographical conventions

4.1 Maturity model

In addition to informative and normative content, this International Standard includes guidance about the maturity of emerging material that has completed a rigorous design review but has limited implementation in commercial products. This material is clearly delineated as described in Clause 4. The typographical convention is intended to provide a sense of the maturity of the affected material, without altering its normative content. By recognizing the relative maturity of different clauses of the International Standard, an implementer should be able to make more informed decisions about the adoption and deployment of different portions of the International Standard in a commercial product.

This International Standard has been structured to convey both the formal requirements and assumptions of the Information Technology – Storage Management API and its emerging implementation and deployment lifecycle. Over time, the intent is that all content in the International Standard will represent a mature and stable design, be verified by extensive implementation experience, assure consistent support for backward compatibility, and rely solely on content material that has reached a similar level of maturity. Unless explicitly labeled with one of the subordinate maturity levels defined for this International Standard, content is assumed to satisfy these requirements and is referred to as “Finalized”. Since much of the evolving International Standard content in any given release will not have matured to that level, this International Standard defines three subordinate levels of implementation maturity that identify important aspects of the content’s increasing maturity and stability. Each subordinate maturity level is defined by its level of implementation experience, its stability and its reliance on other emerging standards. Each subordinate maturity level is identified by a unique typographical tagging convention that clearly distinguishes content at one maturity model from content at another level.

4.2 Experimental maturity level

No material is included in this International Standard unless its initial architecture has been completed and reviewed. Some content included in this International Standard has complete and reviewed design, but lacks implementation experience and the maturity gained through implementation experience. This content is included in order to gain wider review and to gain implementation experience. This material is referred to as “Experimental”. It is presented here as an aid to implementers who are interested in likely future developments within the SMI International Standards. The contents of an Experimental profile may change as implementation experience is gained. There is a high likelihood that the changed content will be included in an upcoming revision of the International Standard. Experimental material can advance to a higher maturity level as soon as implementations are available. Figure 1 is a sample of the typographical convention for Experimental content.

EXPERIMENTAL

Experimental content appears here.

EXPERIMENTAL

Figure 1 - Experimental maturity level tag

4.3 Implemented maturity level

Profiles for which initial implementations have been completed are classified as “Implemented”. This indicates that at least two different vendors have implemented the profile, including at least one provider implementation. At this maturity level, the underlying architecture and modeling are stable, and changes in future revisions will be limited to the correction of deficiencies identified through additional implementation experience. Should the material become obsolete in the future, it shall be deprecated in a minor revision of the

AVA Documents
Document Sharing Hub
Full document details: BS ISO/IEC 24775-6:2014

International Standard prior to its removal from subsequent releases. Figure 2 is a sample of the typographical convention for Implemented content.

IMPLEMENTED

Implemented content appears here.

IMPLEMENTED

Figure 2 - Implemented maturity level tag

4.4 Stable maturity level

Once content at the Implemented maturity level has garnered additional implementation experience, it can be tagged at the Stable maturity level. Material at this maturity level has been implemented by three different vendors, including both a provider and a client. Should material that has reached this maturity level become obsolete, it may only be deprecated as part of a minor revision to the International Standard. Material at this maturity level that has been deprecated may only be removed from the International Standard as part of a major revision. A profile that has reached this maturity level is guaranteed to preserve backward compatibility from one minor International Standard revision to the next. As a result, Profiles at or above the Stable maturity level shall not rely on any content that is Experimental. Figure 3 is a sample of the typographical convention for Implemented content.

STABLE

Stable content appears here.

STABLE

Figure 3 - Stable maturity level tag

4.5 Finalized maturity level

Content that has reached the highest maturity level is referred to as “Finalized.” In addition to satisfying the requirements for the Stable maturity level, content at the Finalized maturity level shall solely depend upon or refine material that has also reached the Finalized level. If International Standard content depends upon material that is not under the control of the SNIA, and therefore not subject to its maturity level definitions, then the external content is evaluated by the SNIA to assure that it has achieved a comparable level of completion, stability, and implementation experience. Should material that has reached this maturity level become obsolete, it may only be deprecated as part of a major revision to the International Standard. A profile that has reached this maturity level is guaranteed to preserve backward compatibility from one minor International Standard revision to the next. Over time, it is hoped that all International Standard content will attain this maturity level. Accordingly, there is no special typographical convention, as there is with the other, subordinate maturity levels. Unless content in the International Standard is marked with one of the typographical conventions defined for the subordinate maturity levels, it should be assumed to have reached the Finalized maturity level.

4.6 Deprecated Material

Non-Experimental material can be deprecated in a subsequent revision of the International Standard. Sections identified as “Deprecated” contain material that is obsolete and not recommended for use in new development efforts. Existing and new implementations may still use this material, but shall move to the newer approach as soon as possible. The maturity level

AVA Documents
Document Sharing Hub
Full document details: BS ISO/IEC 24775-6:2014

of the material being deprecated determines how long it will continue to appear in the International Standard. Implemented content shall be retained at least until the next revision of the specialization, while Stable and Finalized material shall be retained until the next major revision of the International Standard. Providers shall implement the deprecated elements as long as it appears in the International Standard in order to achieve backward compatibility. Clients may rely on deprecated elements, but are encouraged to use non-deprecated alternatives when possible.

Deprecated sections are documented with a reference to the last published version to include the deprecated section as normative material and to the section in the current International Standard with the replacement. Figure 4 contains a sample of the typographical convention for deprecated content.

DEPRECATED

Content that has been deprecated appears here.

DEPRECATED

Figure 4 - Deprecated tag

Documents
Document Sharing Hub

Full document details: BS ISO/IEC 24775-6:2014

STABLE

5 Fabric Profile

5.1 Description

5.1.1 General

Figure 5 illustrates the basic elements of the Fabric Profile.

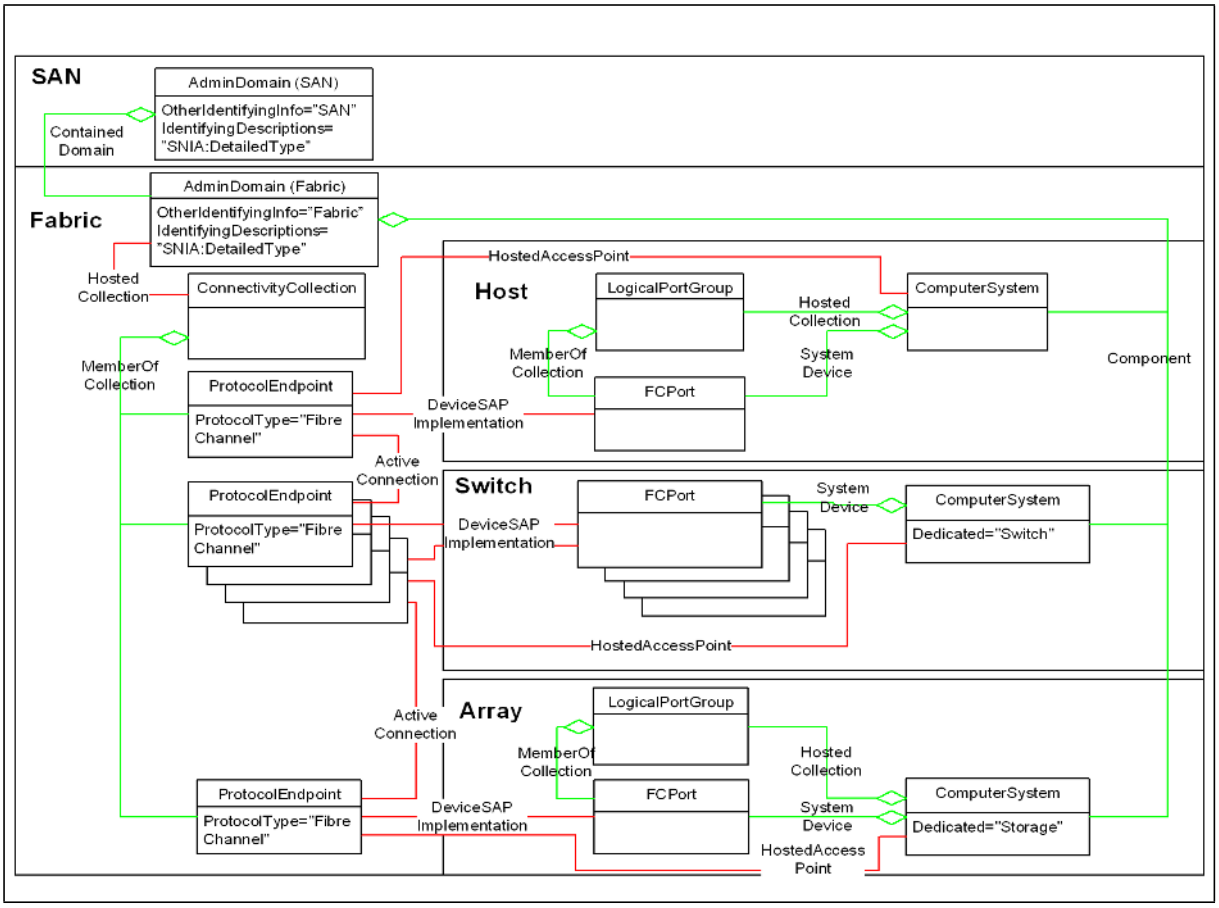

Figure 5 - Fabric Instance

5.1.2 SANS and Fabrics as AdminDomains

A SAN and Fabric are represented in CIM by AdminDomain. A SAN contains one or more Fabrics, which are modeled as AdminDomains. The “containment” of Fabrics to SANs is through the association ContainedDomain. AdminDomain is sub-classed from System. This is significant because a SAN and a Fabric can be considered a group of components that operate together as a single system and should be/are managed as such. The relationship of the Fabrics in a SAN is intended to be able to aggregate all the Fabrics that are in the same physical topology. The possible use cases include: Fibre Channel Virtual Fabrics which have multiple Virtual Fabrics in the same underlying physical topology, Fibre Channel Inter-Fabric Routing which routes Fibre Channel frames between Fabrics, and redundant Fabrics where two physically separate networks connect the same set of hosts and storage.

An AdminDomain in CIM is keyed by the property Name with an associated optional property NameFormat. The naming convention for SANs are left up to the implementation, but the Name shall be correlatable (the same) when multiple agents are managing the same SAN for Virtual Fabric (VF) and Inter-Fabric Routing (IFR).

Documents
Document Sharing Hub
Full document details: BS ISO/IEC 24775-6:2014

For Fibre Channel Fabrics, the identifier (AdminDomain.Name) is the Fabric WWN as reported by the fibre channel fabric services. The AdminDomain for the Fibre Channel Fabric shall have a NameFormat of WWN.

5.1.3 Fabrics and Topology

A Fabric in CIM minimally contains a ConnectivityCollection and its component systems. They are associated to the Fabric by the association Component. For the purposes of this discussion, it is assumed one models both.

ConnectivityCollection represents the foundation necessary for routing (and is the reason it is defined in the Network model). A ConnectivityCollection groups a set of ProtocolEndpoints that are able to communicate with each other directly. The ProtocolEndpoint is associated to the ConnectivityCollection by MemberOfCollection. A link is represented by the association ActiveConnection, which associates two ProtocolEndpoints, defined as a connection that is currently carrying traffic or is configured to carry traffic.

It is important at this point to clarify the relationship (or use) of the ProtocolEndpoint versus the use of FCPort (discussed later). A NetworkPort (from which FCPort is subclassed) is the device that is used to represent the logical aspects of the link and data layers. The ProtocolEndpoint is used to represent the higher network layers for routing. This is best understood when thinking about Ethernet and IP, but applies to fibre channel also. When two ProtocolEndpoints are capable of communicating, the association ActiveConnection is used to represent the capability to communicate and completes the picture of the topology.

One can ultimately represent multiple ConnectivityCollections (e.g., FC, IP (over FC), and IP (FC encapsulated in IP) for the same fibre channel fabric.

The minimum set of requirements for this profile is based on FC-GS-6.

5.1.4 Systems and NetworkPorts

As discussed in 5.1.3, a Port is associated to a device to represent the link layer. A NetworkPort is associated to the ProtocolEndpoint by DeviceSAPImplementation and “joins” the System and Device model to the Network model. Instantiation of DeviceSAPImplementation, ProtocolEndpoint, and ActiveConnection is not necessary if the transceiver is not installed or the cable connecting the port to another port is not installed since the device is not capable of communicating.

Systems, or in this case ComputerSystem, represent the fabric elements that contain Ports. These are typically Hosts, Switches and Storage Systems. In Fibre Channel, these are called Platforms and Interconnect Elements. The property Dedicated in ComputerSystem allows these fabric elements to be identified. For a host, Dedicated is set to “Not Dedicated”, for a switch, Dedicated is set to “Switch”, and for a storage system, Dedicated is set to “Storage”. The Ports on a System are associated by SystemDevice.

Discovery from the viewpoint of the fabric includes the end device, but often times the information available is minimal or not available. In the case of Fibre Channel, this occurs if the platform database is not populated. If this is the case, then discovery cannot tell whether a Fibre Channel Node is contained within the same platform or not. When this occurs, ComputerSystem is not instantiated and the LogicalPortGroup representing the Node and the FCPort are associated to the AdminDomain representing the Fabric.

The instrumentation needs to respond to physical fabric changes by adding or removing Logical elements to the AdminDomain. Adding an element to the fabric is straightforward. However, it is not always clear when an element has been removed. The device may have been reset, or temporarily shut down, in which case it would be an element in the fabric with an “unknown” status. The lifetime of objects that can no longer be discovered is implementation specific.

If the instrumentation is unable to determine the type of platform discovered (defined in FC-GS-6), then the agent shall set the ComputerSystem.Dedicated property to “Unknown”.

AVA Documents
Document Sharing Hub

Full document details: BS ISO/IEC 24775-6:2014

Additional identification information about Switch ComputerSystem (e.g., DomainID) is placed in OtherIdentifyingInfo property.

EXPERIMENTAL

5.1.5 N Port Virtualization (NPIV)

Within a fabric, a host or an N Port Virtualizer can "virtualize" one or more fibre channel ports for each "physical" fibre channel port, known as NPIV. To model NPIV, Figure 6 is extended as shown in Figure 6 with multiple ActiveConnections to the same switch port. The association, HostedDependency, is used to associate the FCPorts representing the "physical" fibre channel port or hosting FCPort with the "virtual" fibre channel ports with the "virtual" port or dependent hosted FCPort.

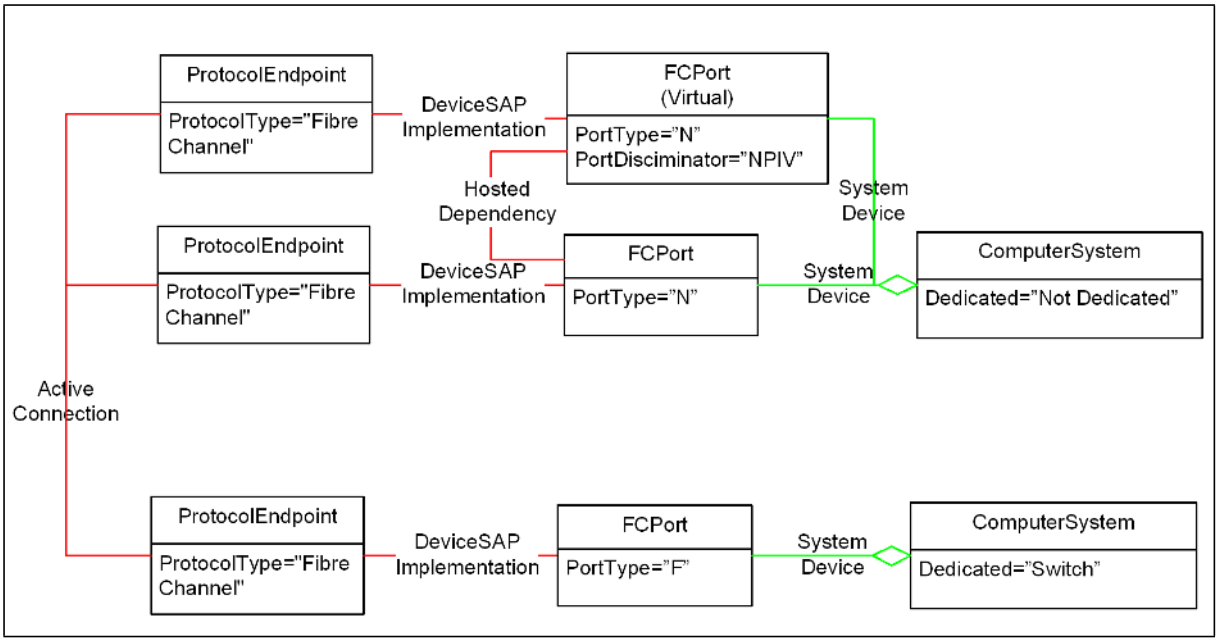

Figure 6 - NPIV Instance

EXPERIMENTAL

Documents
Document Sharing Hub
Full document details: BS ISO/IEC 24775-6:2014

5.1.6 Zoning

Figure 7 illustrates the basic model for zoning.

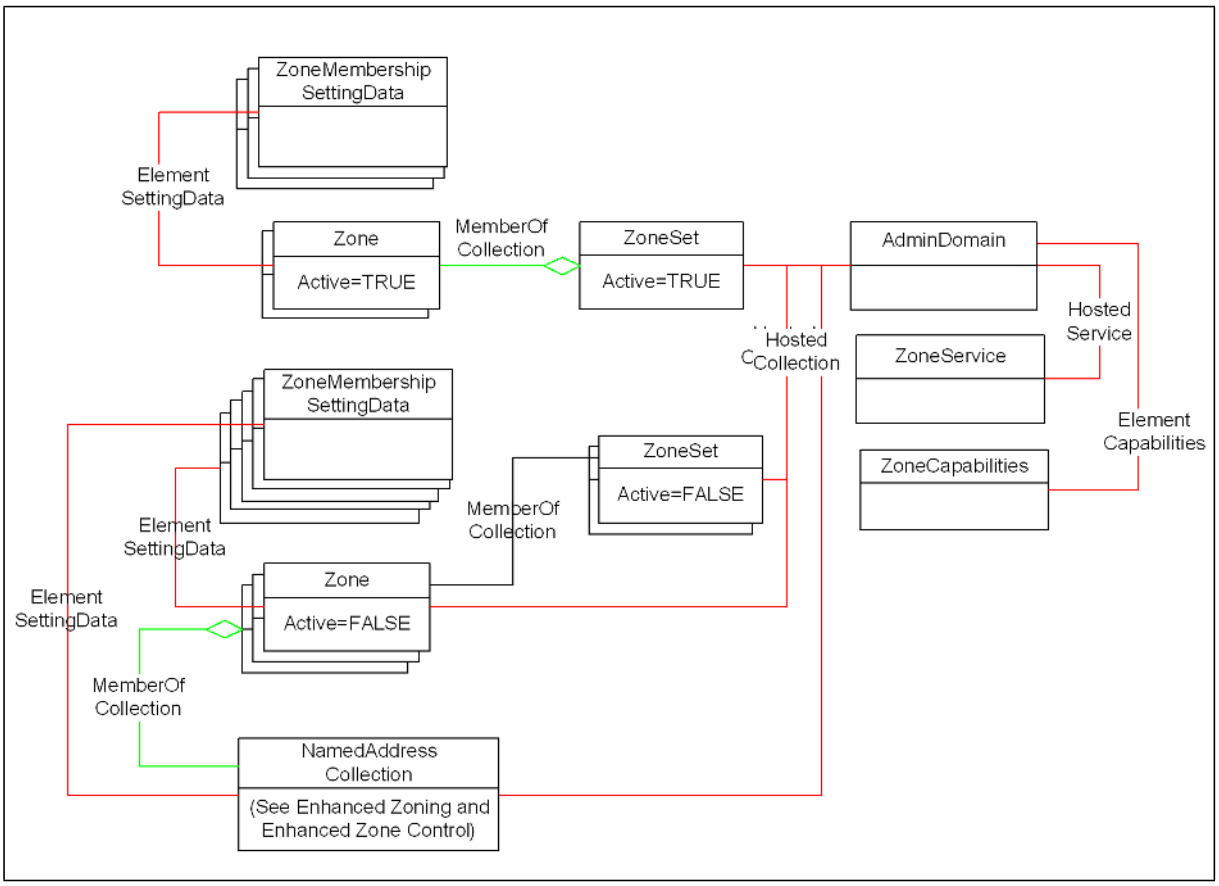

Figure 7 - Zoning Instance (AdminDomain)

The zoning model is based on FC-GS-4. This model represents the management model for defining Zone Sets, Zones, and Zone Members and "activation" of a Zone Set for a fabric. In the following discussion it may be helpful to also define the following:

- **Active ZoneSet**: the Zone Set currently enforced by the Fabric.
- **Zone Set Database**: The database of the Zone Sets not enforced by the Fabric. Referred to in this document as the Inactive Zone Sets.
- **Zoning Definitions**: a generic term used to indicate both the above concepts.

The zoning model refers to a Zone Set as ZoneSet, a Zone as Zone, ZoneAlias as a NamedAddressCollection, and Zone Member as ZoneMembershipSettingData. ZoneSets shall only contain Zones associated by MemberOfCollection. Zones shall only contain ZoneMembershipSettingData associated by ElementSettingData or NamedAddressCollections associated by MemberOfCollection. For more information with regards to NamedAddressCollection, see Clause 6 Enhanced Zoning and Enhanced Zone Control Subprofile.

The class ZoneMembershipSettingData has two properties that indicate how the device was identified to be "zoned". They are ConnectivityMemberType (e.g., PermanentAddress for WWN, NetworkAddress for FCID, etc.) and ConnectivityMemberID which contains the actual device identifier.

The Active Zone Set, defined by an instance of ZoneSet with the Active property set to TRUE, shall only be hosted on the AdminDomain representing the Fabric. The Inactive Zone Sets, defined by an instance of ZoneSet with the Active property set to FALSE, shall be hosted on either the AdminDomain representing the Fabric as shown in Figure 7 or the ComputerSystem representing the switch as shown

AVA Documents
Document Sharing Hub
Full document details: BS ISO/IEC 24775-6:2014

in Figure 8. It is allowed to have no ZoneSets (active or inactive), only an active ZoneSet, only an inactive ZoneSet(s), or both an inactive ZoneSet(s) and an active ZoneSet.

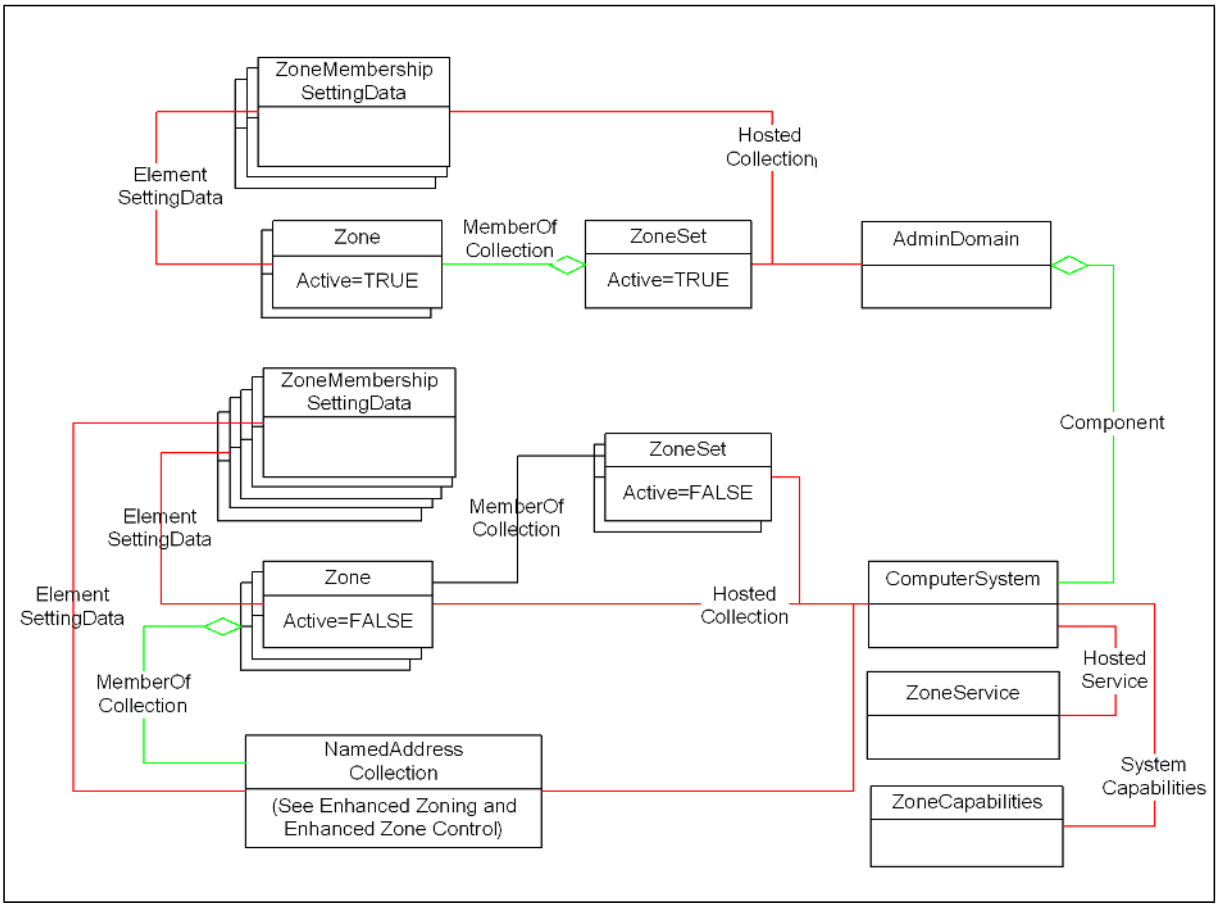

Figure 8 - Zoning Instance (ComputerSystem)

The ZoneService and ZoneCapabilities are also associated to the same System (AdminDomain or ComputerSystem) as the Inactive Zone Sets using the association HostedService or ElementCapabilities, respectively.

ZoneService provides the configuration methods to control create ZoneSets, Zones, Zone Aliases, and Zone Members, as well as activation of the Zone Set. This service and its methods are described in the Clause 6 Enhanced Zoning and Enhanced Zone Control Subprofile.

EXPERIMENTAL

5.1.7 Conditional Classes and Properties

Table 4 contains some classes which are conditional on implementation of other profiles in the Fabric Book:

- CIM_ComputerSystem (Partitioned Switch) is conditional on the implementation of the Virtual Fabrics component profile;
- CIM_FCPort (Partitioned Switch FCPort) is conditional on the implementation of the Switch Partitioning component profile.

In addition, some of the mandatory classes of the Fabric Profile include properties that are conditional on the implementation of other profiles in the Fabric book.

Documents
Document Sharing Hub
Full document details: BS ISO/IEC 24775-6:2014

- Some properties in CIM_ComputerSystem (Switch) are conditional on the implementation of the Switch Profile.
- Some properties in CIM_FCPort (Switch FCPort) are conditional on the implementation of the Switch Profile.

EXPERIMENTAL

EXPERIMENTAL

5.1.8 Fabric Predefined Indications

If the optional Experimental Indication profile is supported by an implementation of the Fabric profile, it shall implement the SNIA_IndicationConfigurationService and its associated SNIA_IndicationConfigurationCapabilities. If the implementation supports predefined IndicationFilters or predefined IndicationFilterCollections this shall be indicated in the SupportedFeatures property of the SNIA_IndicationConfigurationCapabilities. If a value “3” is present, it means the implementation supports predefined IndicationFilters. If a value of “5” is present, it means the implementation supports predefined IndicationFilterCollections.

Figure 9 illustrates classes that shall be populated by the Fabric profile if both “3” and “5” are present in the SupportedFeatures property.

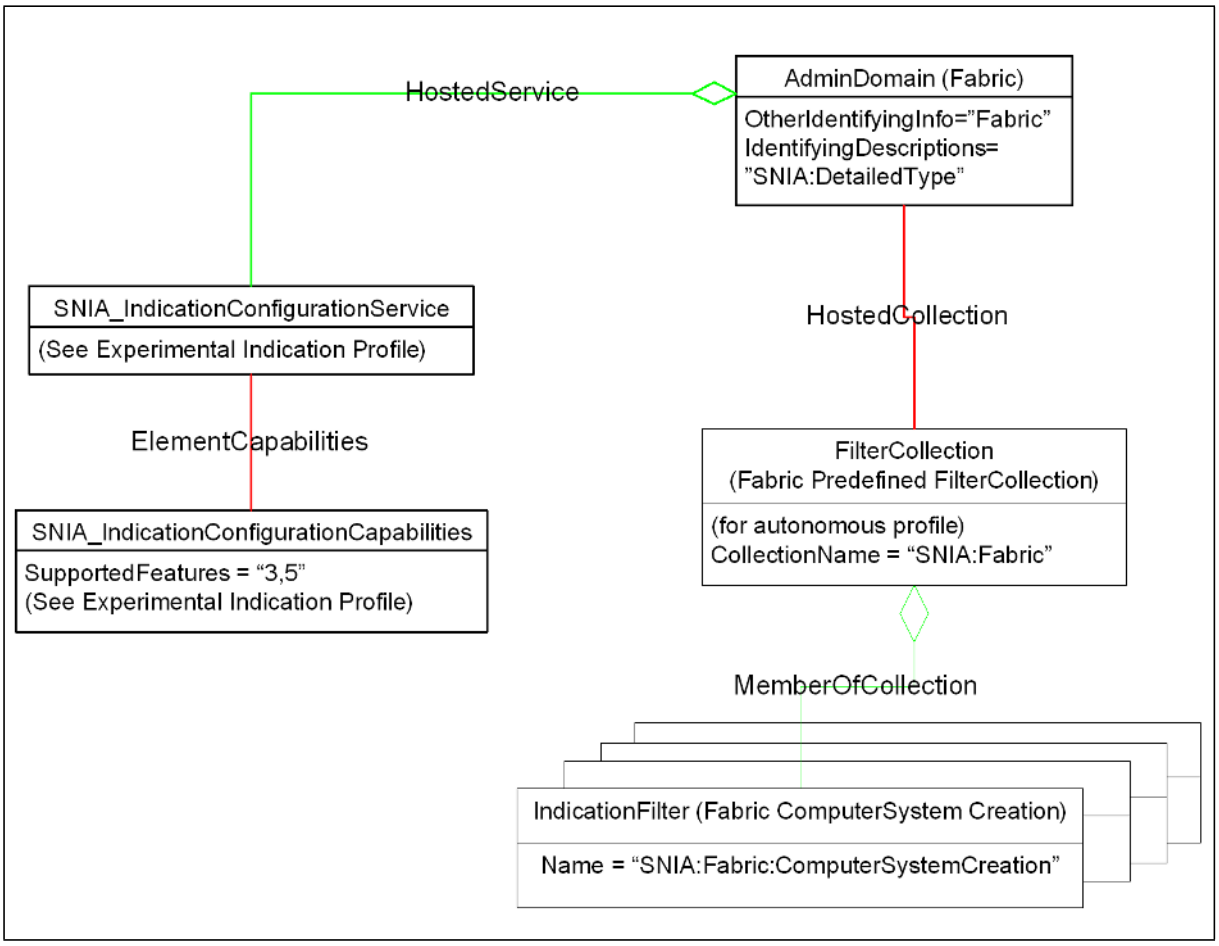

Figure 9 - Predefined Fabric IndicationFilters and Collection

The SNIA_IndicationConfigurationService is hosted on the fabric AdminDomain. The FilterCollection for fabric is also hosted on the fabric AdminDomain. The fabric FilterCollection has members which are all the predefined IndicationFilters supported by the implementation.

AVA Documents
Document Sharing Hub
Full document details: BS ISO/IEC 24775-6:2014

This shall include all Mandatory IndicationFilters of the Fabric Profile. But it should also include any IndicationFilter that has been predefined by the implementation. This may include conditional, optional or vendor specific IndicationFilters supported by the implementation.

The fabric FilterCollection shall have the CollectionName “SNIA:Fabric”. Each of the predefined filters shall have the Name property as defined for the IndicationFilter. In Figure 9 the name of the IndicationFilter (Fabric ComputerSystem Creation) is “SNIA:Fabric:ComputerSystemCreation”. For vendor specific IndicationFilters (not defined in this International Standard), the Name of the filter would be of the form ORG_ID”:”PROFILE”:”UNIQUE_ID, where ORGID is the designation of the vendor that is providing the implementation.

EXPERIMENTAL

5.2 Health and Fault Management

The following classes report possible Health and Fault information through LifeCycle indications:

- ComputerSystem;
- FCPort.

These LifeCycle indications are more fully described in Table 4, “CIM Elements for Fabric”.

Also in Table 4, “CIM Elements for Fabric” is a list of AlertIndications which may also be indicators for Health and Fault Management.

5.3 Cascading Considerations

None.

5.4 Supported Subprofiles and Package

Table 1 describes the supported profiles for Fabric.

Table 1 - Supported Profiles for Fabric

Profile Name	Organization	Version	Requirement	Description
Zone Control	SNIA	1.4.0	Optional	
Enhanced Zoning and Enhanced Zoning Control	SNIA	1.4.0	Optional	
FabricVirtualFabrics	SNIA	1.5.0	Optional	
N Port Virtualizer	SNIA	1.5.0	Optional	
FDMI	SNIA	1.4.0	Optional	
Fabric Path Performance	SNIA	1.2.0	Optional	
FabricSecurity	SNIA	1.2.0	Optional	
Indication	SNIA	1.5.0	Mandatory	
Experimental Indication	SNIA	1.5.0	Optional	Experimental.
Fabric Views	SNIA	1.5.0	Optional	Experimental.
Launch In Context	DMTF	1.0.0	Optional	Experimental. See DSP1102, version 1.0.0

5.5 Methods of this Profile

Not defined in this International Standard.

Documents
Document Sharing Hub
Full document details: BS ISO/IEC 24775-6:2014

5.6 Client Considerations and Recipes

5.6.1 Fabric Identifier

The client needs to consider that the fabric identifier is not durable but is correlatable and may change over time. See *Information Technology – Storage Management, Part 2 Common Architecture* 8 Correlatable and Durable Names.

5.6.2 FCPort OperationalStatus

OperationalStatus is the property to indicate status and state for the FCPort (both Platform and Switch ports). The FCPort instance has one of the following Operational Statuses.

Table 2 - Port OperationalStatus

OperationalStatus	Description
OK	Port is online
Error	Port has a failure
Stopped	Port is disabled
InService	Port is in Self Test
Unknown	

5.6.3 Switch ComputerSystem OperationalStatus

OperationalStatus is the property to indicate status and state for switch ComputerSystems. The switch ComputerSystem instance has one of the following Operational Statuses and possibly one of the Subsidiary statuses, as shown in Table 3.

Table 3 - OperationalStatus for ComputerSystem

Operational Status	Possible Subsidiary Operational Status	Description
OK		The system has a good status.
OK	Stressed	The system is stressed, for example the temperature is over limit or there is too much IO in progress.
OK	Predictive Failure	The system will probably fail sometime soon.
Degraded		The system is operational but not at 100 % redundancy. A component has suffered a failure or something is running slow.
Error		An error has occurred causing the system to stop. This error may be recoverable with operator intervention.
Error	Non-recoverable error	A severe error has occurred. Operator intervention is unlikely to fix it.
Error	Supporting entity in error	A modeled element has failed.
InService		Switch is in Self Test.
No contact		The provider knows about the array but has not talked to it since last reboot.
Lost communication		The provider used to be able to communicate with the array, but has now lost contact.
Starting		The system is starting up.
Stopping		The system is shutting down.
Stopped		The data path is OK but shut down, the management channel is still working.

AVA Documents
Document Sharing Hub
Full document details: BS ISO/IEC 24775-6:2014

5.6.4 Discover The Fabric Topology

```
// This recipe describes how to build a topology graph of a fabric.
//
// 1. Identifies all the Switches and adds their objects paths and the
// object paths of the FC Ports belonging to these Switches to the $nodes
// array
//
// 2. Creates a suitable Association instance (e.g., a SystemDevice
// Association instance between a Switch and a FC Port), setting its
// GroupComponent and PartComponent. Adds the object path of the
// Association to the $links array
//
// 3. Creates a map of all connected FC Ports (i.e., belonging to
                            Switches
// that are ISL'd together and to Host HBAs and Storage System Front End
// Controllers)
//
// In this map, the FC Ports (i.e., the ones that are connected) are
// cross-connected.
//
// e.g., For a pair of FC Ports, one belonging to a Switch and the other
// belonging to a Host (HBA), the map indexed by the Switch Port WWN
                            returns
// the Host (HBA) FC Port object path and the map indexed by the Host
                            (HBA)
// FC Port WWN returns the Switch FC Port object path.
//
// Similar relationship exists between the pairs of FC Ports where one
// belongs to a Switch and the other belonging belongs to a Storage
                            System
// Front End Controller and for FC Ports each of which belongs to a
                            Switch.
//
// 4. Identifies all the Hosts and adds their objects paths to the $nodes
// array. Note that the object paths of the FC Ports (HBA Ports)
                            belonging
// to these Hosts are already added to the $nodes array in step-3.
//
// 5. Creates a suitable Association instance (e.g. a SystemDevice
// Association instance between a Host and a FC Port), setting its
// GroupComponent and PartComponent. Adds the object path of the
                            Association
// to the $links array.
//
// 6. Identifies all the Storage Systems and adds their objects paths to
                            the
// $nodes array.
// Note that the object paths of the FC Ports (i.e., Front End Controller
// FC Ports) belonging to these Storage Systems are already added to the
// $nodes array in step-3.
//
// 7. Creates a suitable Association instance (e.g. a SystemDevice
```

AVA Documents
Document Sharing Hub
Full document details: BS ISO/IEC 24775-6:2014

```
// Association instance between a Storage System and a FC Port), setting
// its GroupComponent and PartComponent. Adds the object path of the
// Association to the $links array.

// DESCRIPTION
// Create a map of how elements in a SAN are connected together via
// Fibre-ChannelFC ports.
//
// The map is built in array $attachedFcPorts->[], where the index is a
// WWN of any device port on the SAN, and the value at that index is
// the object path of the connected Switch or HBA or Storage System FC
                           port.
//
// First find all the switches in a SAN. Get all the FC Ports for each
// switch and get the Attached FC Ports for each Switch FC Port. Save
                           these
// device FC ports in the map described above.

// PREEXISTING CONDITIONS AND ASSUMPTIONS
// 1. All agents/namespaces supporting Fabric Profile previously
                           identified
// using SLP. Do this for each CIMOM supporting Fabric Profile

switches[] = enumerateInstances("CIM_ComputerSystem", true, false, true,
                           true, null)
for #i in $switches[]
{
    if (!contains(5, $switches[#i].Dedicated))
        continue

    // only process switches, not other computer systems

    // Add the switch to the $nodes array

    $nodes.addIfNotAlreadyAdded ($switches[#i].getObjectPath();

    // Get all the SystemDevice associations between this switch and its
    // FC Ports

    $sysDevAssoc[] = ReferenceNames($switches[#i],
                               "CIM_FCPort",
                               "GroupComponent");

    // Add these associations to the $links array

    for #a in $sysDevAssoc->[]
    $links.addIfNotAlreadyAdded ($sysDevAssoc->[#a];

    $fcPorts->[] = AssociatorNames(
        $switches[#i].getObjectPath(),
        "CIM_SystemDevice",
        "CIM_FCPort",
```

Documents
Document Sharing Hub

Full document details: BS ISO/IEC 24775-6:2014

```
            "GroupComponent",
            "PartComponent")
        for #j in $fcPorts->[]
        {

            // Add the FC Port in $nodes array

            $nodes.addIfNotAlreadyAdded (fcPorts->[#j];

            $protocolEndpoints->[] = AssociatorNames(
                fcPorts->[#j],
                "CIM_DeviceSAPImplementation",
                "CIM_ProtocolEndpoint",
                "Antecedent",
            "Dependent");

            // NOTE - It is possible for this collection to be empty (i.e.,
                                ports
           // that are not connected). It is possible for this collection to
           // have more than one element (loops attached to a switch port is
                                the
            // most common example).

            if ($protocolEndpoints->[].length == 0)
                continue

            // Add the Protocol End Point to the nodes array.
            // Currently this recipe is designed to only save one
            // ProtocolEndpoint.

            $nodes.addIfNotAlreadyAdded (protocolEndpoints[0]);

            // Add the associations between the fcPort and the Protocol end
                                point
            // to the links array

            $devSAPImplassoc[]  = ReferenceNames($fcPorts->[#j],
                                        "CIM_ProtocolEndpoint",
                                        null);
            for #a in $devSAPImplassoc->[]
                $links.addIfNotAlreadyAdded ($devSAPImplassoc->[#a];

            $attachedProtocolEndpoints->[] = AssociatorNames(
                $protocolEndpoints->[0],
                "CIM_ActiveConnection",
                "CIM_ProtocolEndpoint",
                null, null)

            // Add the Attached Protocol End Point to the nodes array

            $nodes.addIfNotAlreadyAdded (attachedProtocolEndpoints->[0]);
```

AVA Documents
Document Sharing Hub

```
        // Add the associations between the Protocol end point and the
        // Attached protocol endpoint to the links array

        $actConnassoc[]  = ReferenceNames($protocolEndpoint->[#0],
                                 "CIM_ActiveConnection",
                                  null);
        for #a in $actConnassoc->[]
            $links.addIfNotAlreadyAdded ($actConnassoc->[#a];

        // NOTE: role & resultRole are null as the direction of the
        // association is not dictated by the specification

        // $attachedFcPort is either a device FC port or an ISL'd switch
                            FC
       // port from another switch. We store this result is stored (i.e.
        // which device FC Port is connected // to which switch FC Port)
                            in
        // a suitable data structure for subsequent correlation to ports
        // discovered on devices.

        for #k in $attachedProtocolEndpoints->[]
        {
            $attachedFcPorts->[] = Associators(
                $attachedProtocolEndpoints->[#k],
                "CIM_DeviceSAPImplementation",
                "CIM_FCPort",
                "Dependent",
                "Antecedent",
                false,
                false,
                ["PermanentAddress"])
            $attachedFcPort = $attachedFcPorts[0] // Exactly one member
                            guaranteed by model

            // Add the attached FC Port to the $nodes array
            if $attachedFcPort != null
                $nodes.addIfNotAlreadyAdded ($attachedFcPort);
        }
    }
}

Determine the active Zone Set in a SAN
// DESCRIPTION
// Traverse from the fabric to all zone sets, looking for
// the active zone set
//
// PREEXISTING CONDITIONS AND ASSUMPTIONS
//
// 1. The fabric of interest (an AdminDomain) has been previously
//   identified and defined in the $Fabric-> variable
```

Documents
Document Sharing Hub
Full document details: BS ISO/IEC 24775-6:2014

```
$ZoneSets[] = Associators($Fabric->, "CIM_HostedCollection",
                          "CIM_ZoneSet", null, null, false, false, null)

for #i in $ZoneSets[] {
    if ($ZoneSet[#i].Active) {
        // <found active ZoneSet>
       // NOTE - there can be only one active ZoneSet in a fabric, though
                          there may be none
        break
    }
}
```

5.7 Registered Name and Version

Fabric version 1.5.0 (Autonomous Profile).

5.8 CIM Elements

5.8.1 General

Table 4 describes the CIM elements for Fabric.

Table 4 - CIM Elements for Fabric

Element Name	Requirement	Description
5.8.2 CIM_ActiveConnection	Mandatory	The association between ProtocolEndpoints representing the links between devices.
5.8.3 CIM_AdminDomain (Fabric)	Mandatory	AdminDomain representing the Fabric. Associated to RegisteredProfile.
5.8.4 CIM_AdminDomain (SAN)and	Mandatory	AdminDomain representing the SAN.
5.8.5 CIM_Component (Platform to Fabric)	Optional	Aggregates Hosts and Arrays (Platforms) in the AdminDomain that represents the Fabric.
5.8.6 CIM_Component (Switch to Fabric)	Mandatory	Aggregates Switches in the AdminDomain that represents the Fabric.
5.8.7 CIM_ComputerSystem (Host Platform)	Mandatory	The ComputerSystem representing the Host Platform.
5.8.8 CIM_ComputerSystem (Partitioned Switch)	Conditional	Conditional requirement: Required if the Virtual Fabrics profile is implemented. The ComputerSystem representing a Partitioned Switch.
5.8.9 CIM_ComputerSystem (Storage Platform)	Mandatory	The ComputerSystem representing the Storage Platform (e.g. an Array).
5.8.10 CIM_ComputerSystem (Switch)	Mandatory	The ComputerSystem representing the Switch.
5.8.11 CIM_ConnectivityCollection	Mandatory	Collects the ProtocolEndpoints of the fabric.
5.8.12 CIM_ContainedDomain	Mandatory	Associates a Fabric to a SAN.
5.8.13 CIM_DeviceSAPImplementation (Non-Switch to FCPort)	Mandatory	Associates the Non-Switch (Host or Storage) FCPort to the ProtocolEndpoint.
5.8.14 CIM_DeviceSAPImplementation (Switch to FCPort)	Mandatory	Associates the Switch FCPort to the ProtocolEndpoint.
5.8.15 CIM_ElementCapabilities (ZoneCapabilities to Fabric)	Mandatory	Associates ZoneCapabilities to a Fabric.

Documents
Document Sharing Hub
Full document details: BS ISO/IEC 24775-6:2014

Table 4 - CIM Elements for Fabric

Element Name	Requirement	Description
5.8.16 CIM_ElementCapabilities (ZoneCapabilities to Switch)	Mandatory	Associates ZoneCapabilities to a switch system.
5.8.17 CIM_ElementSettingData (ZoneMembershipSettingData to Zone)	Mandatory	Associates ZoneMembershipSettingData to the Zone.
5.8.18 CIM_FCActiveConnection	Optional	Experimental. The association between ProtocolEndpoints representing the links between fibre channel devices (including ISLs).
5.8.19 CIM_FCPort (Host FCPort)	Mandatory	Fibre Channel Port for Host Platforms.
5.8.20 CIM_FCPort (Host NPIV FCPort)	Optional	Experimental. A Host NPIV Fibre Channel Port for Host Platforms.
5.8.21 CIM_FCPort (Partitioned Switch FCPort)	Conditional	Conditional requirement: Support for the Switch Partitioning profile. Fibre Channel Port for Partitioned Switch.
5.8.22 CIM_FCPort (Storage FCPort)	Mandatory	Fibre Channel Port for Devices (Storage Platforms).
5.8.23 CIM_FCPort (Switch FCPort)	Mandatory	Fibre Channel Port for Switch.
5.8.24 CIM_FilterCollection (Fabric Predefined FilterCollection)	Conditional	Experimental. Conditional requirement: Required if the Experimental Indication Profile is supported and the SNIA_IndicationConfigurationCapabilities.SupportedFeatures='5' (Predefined Filter Collections). This is a collection of predefined IndicationFilters to which a client may subscribe.
5.8.25 CIM_HostedAccessPoint (AdminDomain to ProtocolEndpoint)	Optional	Associates the ProtocolEndpoint to a Fabric AdminDomain.
5.8.26 CIM_HostedAccessPoint (ComputerSystem to ProtocolEndpoint)	Mandatory	Associates the ProtocolEndpoint to the hosting ComputerSystem.
5.8.27 CIM_HostedCollection (Fabric to ConnectivityCollection)	Mandatory	Associates the ConnectivityCollection to the AdminDomain representing the Fabric.
5.8.28 CIM_HostedCollection (Fabric to predefined FilterCollection)	Conditional	Experimental. Conditional requirement: Required if the Experimental Indication Profile is supported and the SNIA_IndicationConfigurationCapabilities.SupportedFeatures='5' (Predefined Filter Collections).
5.8.29 CIM_HostedCollection (System to LogicalPortGroup)	Mandatory	Associates the LogicalPortGroup to the ComputerSystem representing the platform (host or array) or the Fabric (if platforms are not implemented).
5.8.30 CIM_HostedCollection (Zones or ZoneSets to Fabric)	Mandatory	Associates the ZoneSets and Zones to the AdminDomain representing the Fabric.
5.8.31 CIM_HostedCollection (Zones or ZoneSets to Switch)	Mandatory	Associates the ZoneSets and Zones to the hosting System (the ComputerSystem representing the switch).
5.8.32 CIM_HostedDependency	Optional	Experimental. The association representing the relationship of the FCPort that hosts the FCPorts that are virtualized.

Documents
Document Sharing Hub
Full document details: BS ISO/IEC 24775-6:2014

Table 4 - CIM Elements for Fabric

Element Name	Requirement	Description
5.8.33 CIM_IndicationFilter (Fabric ComputerSystem Creation)	Conditional	Experimental. Conditional requirement: Required if the Experimental Indication Profile is supported and the SNIA_IndicationConfigurationCapabilities.SupportedFeatures='3' (Predefined Filters). This is the 'pre-defined' CIM_IndicationFilter instance for the addition of a new computer system instance in the Fabric (Switch or Platform instances).
5.8.34 CIM_IndicationFilter (Fabric ComputerSystem Deletion)	Conditional	Experimental. Conditional requirement: Required if the Experimental Indication Profile is supported and the SNIA_IndicationConfigurationCapabilities.SupportedFeatures='3' (Predefined Filters). This is the 'pre-defined' CIM_IndicationFilter instance for the removal of a fabric computer system instance.
5.8.35 CIM_IndicationFilter (Fabric ComputerSystem OperationalStatus)	Conditional	Experimental. Conditional requirement: Required if the Experimental Indication Profile is supported and the SNIA_IndicationConfigurationCapabilities.SupportedFeatures='3' (Predefined Filters). This is the 'pre-defined' CIM_IndicationFilter instance for the modification of OperationalStatus of a computer system instance (switch or platform) in the Fabric.
5.8.36 CIM_IndicationFilter (Fabric FCPort Creation)	Conditional	Experimental. Conditional requirement: Required if the Experimental Indication Profile is supported and the SNIA_IndicationConfigurationCapabilities.SupportedFeatures='3' (Predefined Filters). This is the 'pre-defined' CIM_IndicationFilter instance for the addition of a new FCPort instance in the Fabric.
5.8.37 CIM_IndicationFilter (Fabric FCPort Deletion)	Conditional	Experimental. Conditional requirement: Required if the Experimental Indication Profile is supported and the SNIA_IndicationConfigurationCapabilities.SupportedFeatures='3' (Predefined Filters). This is the 'pre-defined' CIM_IndicationFilter instance for the removal of a fabric FCPort instance.
5.8.38 CIM_IndicationFilter (Fabric FCPort OperationalStatus)	Conditional	Experimental. Conditional requirement: Required if the Experimental Indication Profile is supported and the SNIA_IndicationConfigurationCapabilities.SupportedFeatures='3' (Predefined Filters). This is the 'pre-defined' CIM_IndicationFilter instance for the modification of OperationalStatus of an FCPort instance in the fabric.
5.8.39 CIM_IndicationFilter (Fabric Fabric Added or Removed)	Conditional	Experimental. Conditional requirement: Required if the Experimental Indication Profile is supported and the SNIA_IndicationConfigurationCapabilities.SupportedFeatures='3' (Predefined Filters). This is the 'pre-defined' CIM_IndicationFilter instance for the addition or removal of a fabric.

Documents
Document Sharing Hub
Full document details: BS ISO/IEC 24775-6:2014

Table 4 - CIM Elements for Fabric

Element Name	Requirement	Description
5.8.40 CIM_IndicationFilter (Fabric Fabric Merge or Segmentation)	Conditional	Experimental. Conditional requirement: Required if the Experimental Indication Profile is supported and the SNIA_IndicationConfigurationCapabilities.SupportedFeatures='3' (Predefined Filters). This is the 'pre-defined' CIM_IndicationFilter instance for the merge of fabrics or segmentation of a fabric.
5.8.41 CIM_IndicationFilter (Fabric Switch Added or Removed)	Conditional	Experimental. Conditional requirement: Required if the Experimental Indication Profile is supported and the SNIA_IndicationConfigurationCapabilities.SupportedFeatures='3' (Predefined Filters). This is the 'pre-defined' CIM_IndicationFilter instance for the addition or removal of a switch to a fabric.
5.8.42 CIM_IndicationFilter (Fabric Switch Status Changed)	Conditional	Experimental. Conditional requirement: Required if the Experimental Indication Profile is supported and the SNIA_IndicationConfigurationCapabilities.SupportedFeatures='3' (Predefined Filters). This is the 'pre-defined' CIM_IndicationFilter instance for the change of OperationalStatus of a switch in a fabric.
5.8.43 CIM_IndicationFilter (Fabric Zone Database Changed)	Conditional	Experimental. Conditional requirement: Required if the Experimental Indication Profile is supported and the SNIA_IndicationConfigurationCapabilities.SupportedFeatures='3' (Predefined Filters). This is the 'pre-defined' CIM_IndicationFilter instance for zone database changes in a fabric.
5.8.44 CIM_IndicationFilter (Fabric ZoneSet Activated)	Conditional	Experimental. Conditional requirement: Required if the Experimental Indication Profile is supported and the SNIA_IndicationConfigurationCapabilities.SupportedFeatures='3' (Predefined Filters). This is the 'pre-defined' CIM_IndicationFilter instance for activation of a ZoneSet in a fabric.
5.8.45 CIM_IndicationFilter (WQL Fabric ComputerSystem OperationalStatus)	Conditional	Deprecated. Conditional requirement: Required if the Experimental Indication Profile is supported and the SNIA_IndicationConfigurationCapabilities.SupportedFeatures='3' (Predefined Filters). This is the WQL 'pre-defined' CIM_IndicationFilter instance for OperationalStatus changes of a fabric (Switch or Platform) ComputerSystem instance.
5.8.46 CIM_IndicationFilter (WQL Fabric FCPort OperationalStatus)	Conditional	Deprecated. Conditional requirement: Required if the Experimental Indication Profile is supported and the SNIA_IndicationConfigurationCapabilities.SupportedFeatures='3' (Predefined Filters). This is the WQL 'pre-defined' CIM_IndicationFilter instance for OperationalStatus changes of a fabric FCPort instance.
5.8.47 CIM_LogicalPortGroup	Mandatory	Fibre Channel Node.

Documents
Document Sharing Hub
Full document details: BS ISO/IEC 24775-6:2014

Table 4 - CIM Elements for Fabric

Element Name	Requirement	Description
5.8.48 CIM_MemberOfCollection (ConnectivityCollection to ProtocolEndpoint)	Mandatory	Associates ConnectivityCollection to ProtocolEndpoint.
5.8.49 CIM_MemberOfCollection (LogicalPortGroup to FCPort)	Mandatory	Associates a LogicalPortGroup to its platform FC Ports.
5.8.50 CIM_MemberOfCollection (Predefined Filter Collection to Fabric Filters)	Conditional	Experimental. Conditional requirement: Required if the Experimental Indication Profile is supported and the SNIA_IndicationConfigurationCapabilities.SupportedFeatures='5' (Predefined Filter Collections). This associates the Fabric predefined FilterCollection to the predefined Filters supported by the Fabric.
5.8.51 CIM_MemberOfCollection (ZoneSet to Zone)	Mandatory	Associates a ZoneSet to its Zones.
5.8.52 CIM_ProtocolEndpoint	Mandatory	The endpoint of a link (ActiveConnection).
5.8.53 CIM_SystemDevice (Non-Switch FCPort to Fabric)	Optional	Associates non-Switch FCPorts to the System (Fabric).
5.8.54 CIM_SystemDevice (Non-Switch FCPort to Platform)	Optional	Associates non-Switch FCPorts to the ComputerSystem (Platform).
5.8.55 CIM_SystemDevice (Switch FCPort to Switch)	Mandatory	Associates Switch FCPorts to the ComputerSystem (Switch).
5.8.56 CIM_Zone (Active)	Mandatory	The active Zones being enforced by the Fabric.
5.8.57 CIM_Zone (Inactive)	Mandatory	The inactive Zones being enforced by the Fabric.
5.8.58 CIM_ZoneCapabilities	Mandatory	The Zoning Capabilities of the associated Fabric (or Switch).
5.8.59 CIM_ZoneMembershipSettingData	Mandatory	Defines the zone member.
5.8.60 CIM_ZoneSet (Active)	Mandatory	The active ZoneSets being enforced by the Fabric.
5.8.61 CIM_ZoneSet (Inactive)	Mandatory	The inactive ZoneSet.
SELECT * FROM CIM_InstCreation WHERE SourceInstance ISA CIM_ComputerSystem	Mandatory	Creation of a ComputerSystem instance. See 5.8.33 CIM_IndicationFilter (Fabric ComputerSystem Creation).
SELECT * FROM CIM_InstDeletion WHERE SourceInstance ISA CIM_ComputerSystem	Mandatory	Deletion of a ComputerSystem instance. See 5.8.34 CIM_IndicationFilter (Fabric ComputerSystem Deletion).
SELECT * FROM CIM_InstCreation WHERE SourceInstance ISA CIM_FCPort	Mandatory	Creation of a FC Port instance. See 5.8.36 CIM_IndicationFilter (Fabric FCPort Creation).
SELECT * FROM CIM_InstDeletion WHERE SourceInstance ISA CIM_FCPort	Mandatory	Deletion of a FC Port instance. See 5.8.37 CIM_IndicationFilter (Fabric FCPort Deletion).
SELECT * FROM CIM_InstModification WHERE SourceInstance ISA CIM_FCPort AND SourceInstance.OperationalStatus <> PreviousInstance.OperationalStatus	Mandatory	Deprecated WQL - Modification of OperationalStatus of a FC Port instance. See 5.8.46 CIM_IndicationFilter (WQL Fabric FCPort OperationalStatus).
SELECT * FROM CIM_InstModification WHERE SourceInstance ISA CIM_FCPort AND SourceInstance.CIM_FCPort::OperationalStatus <> PreviousInstance.CIM_FCPort::OperationalStatus	Mandatory	CQL - Modification of OperationalStatus of a FC Port instance. See 5.8.38 CIM_IndicationFilter (Fabric FCPort OperationalStatus).

AVA Documents
Document Sharing Hub
Full document details: BS ISO/IEC 24775-6:2014

Table 4 - CIM Elements for Fabric

Element Name	Requirement	Description
SELECT * FROM CIM_InstModification WHERE SourceInstance ISA CIM_ComputerSystem AND SourceInstance.Operationalstatus <> PreviousInstance.OperationalStatus	Mandatory	Deprecated WQL - Modification of OperationalStatus of a ComputerSystem instance. See 5.8.45 CIM_IndicationFilter (WQL Fabric ComputerSystem OperationalStatus).
SELECT * FROM CIM_InstModification WHERE SourceInstance ISA CIM_ComputerSystem AND SourceInstance.CIM_ComputerSystem::OperationalStatus <> PreviousInstance.CIM_ComputerSystem::Operationalstatus	Mandatory	CQL - Modification of OperationalStatus of a ComputerSystem instance. See 5.8.35 CIM_IndicationFilter (Fabric ComputerSystem OperationalStatus).
SELECT * FROM CIM_AlertIndication WHERE OwningEntity='SNIA' and MessageID='FC1'	Mandatory	CQL - Modification of Zone Database. See ISO/IEC 24775-2, *Information Technology – Storage Management, Part 2 Common Architecture* 9.3.4.1, Message: Zone Database Changed. See also 5.8.43 CIM_IndicationFilter (Fabric Zone Database Changed).
SELECT * FROM CIM_AlertIndication WHERE OwningEntity='SNIA' and MessageID='FC1'	Mandatory	Deprecated. Deprecated WQL - Modification of Zone Database. See ISO/IEC 24775-2, *Information Technology – Storage Management, Part 2 Common Architecture*, 9.3.4.1 Message: Zone Database Changed.
SELECT * FROM CIM_AlertIndication WHERE OwningEntity='SNIA' and MessageID='FC2'	Mandatory	CQL - ZoneSet Activated. See ISO/IEC 24775-2, *Information Technology – Storage Management, Part 2 Common Architecture*, 9.3.4.2 Message: ZoneSet Activated. See 5.8.44 CIM_IndicationFilter (Fabric ZoneSet Activated).
SELECT * FROM CIM_AlertIndication WHERE OwningEntity='SNIA' and MessageID='FC2'	Mandatory	Deprecated. Deprecated WQL - ZoneSet Activated. See ISO/IEC 24775-2, *Information Technology – Storage Management, Part 2 Common Architecture*, 9.3.4.2 Message: ZoneSet Activated.
SELECT * FROM CIM_AlertIndication WHERE OwningEntity='SNIA' and MessageID='FC5'	Mandatory	Experimental. Switch Status Changed. See ISO/IEC 24775-2, *Information Technology – Storage Management, Part 2 Common Architecture*, 9.3.4.5 Message: Switch Status Changed. See also 5.8.42 CIM_IndicationFilter (Fabric Switch Status Changed).

Documents
Document Sharing Hub
Full document details: BS ISO/IEC 24775-6:2014

Table 4 - CIM Elements for Fabric

Element Name	Requirement	Description
SELECT * FROM CIM_AlertIndication WHERE OwningEntity='SNIA' and MessageID='FC6'	Mandatory	Experimental. Fabric Merge/Segmentation. See ISO/IEC 24775-2, *Information Technology – Storage Management, Part 2 Common Architecture* 9.3.4.6 Message: Fabric Merge/Segmentation See also 5.8.40 CIM_IndicationFilter (Fabric Fabric Merge or Segmentation).
SELECT * FROM CIM_AlertIndication WHERE OwningEntity='SNIA' and MessageID='FC7'	Mandatory	Experimental. Switch Added/Removed. See ISO/IEC 24775-2, *Information Technology – Storage Management, Part 2 Common Architecture* 9.3.4.7 Message: Switch Added/ Removed See also 5.8.41 CIM_IndicationFilter (Fabric Switch Added or Removed).
SELECT * FROM CIM_AlertIndication WHERE OwningEntity='SNIA' and MessageID='FC8';	Mandatory	Experimental. Fabric Added/Removed. See ISO/IEC 24775-2, *Information Technology – Storage Management, Part 2 Common Architecture* 9.3.4.8 Message: Fabric Added/ Removed See also 5.8.39 CIM_IndicationFilter (Fabric Fabric Added or Removed).

5.8.2 CIM_ActiveConnection

The association between ProtocolEndpoints representing the links between devices (including ISLs). For loops, multiple ActiveConnections are instantiated as one to many relationships.

Created By: Static
Modified By: Static
Deleted By: Static
Requirement: Mandatory.

Table 5 describes class CIM_ActiveConnection.

Table 5 - SMI Referenced Properties/Methods for CIM_ActiveConnection

Properties	Flags	Requirement	Description and Notes
Antecedent		Mandatory	The reference to the ProtocolEndpoint for one end of the link.
Dependent		Mandatory	The reference to the ProtocolEndpoint for the other end of the link.

5.8.3 CIM_AdminDomain (Fabric)

AdminDomain representing the fabric. This is a logical entity and can represent virtual fabrics.

Note that if the Virtual Fabrics Profile is implemented, OtherIndentifyInfo shall contain a Virtual Fabric ID with a 'SNIA:VF_ID' in the corresponding index of IdentifyingDescriptions.

Created By: Static
Modified By: Static
Deleted By: Static
Requirement: Mandatory.

Documents
Document Sharing Hub
Full document details: BS ISO/IEC 24775-6:2014

Shall be associated to RegisteredProfile using ElementConformsToProfile association. The RegisteredProfile instance shall have RegisteredName set to 'Fabric', RegisteredOrganization set to 'SNIA', and RegisteredVersion set to '1.5.0'.

Table 6 describes class CIM_AdminDomain (Fabric).

Table 6 - SMI Referenced Properties/Methods for CIM_AdminDomain (Fabric)

Properties	Flags	Requirement	Description and Notes
CreationClassName		Mandatory	Name of Class.
Name	C	Mandatory	WWN of Fabric.
NameFormat		Mandatory	Shall be 'WWN'.
ElementName		Optional	A user friendly name for the Fabric (implementation dependent).
OtherIdentifyingInfo		Mandatory	For a Fabric AdminDomain this property shall contain the value 'Fabric'. For Virtual Fabrics, one of the indices shall contain the value of the Virtual Fabric ID and in the corresponding index for OtherIdentifyingDescription the value 'SNIA:VF_ID'.
IdentifyingDescriptions		Mandatory	For a Fabric AdminDomain this property shall contain the value 'SNIA:DetailedType' in the index for the OtherIdentifyingInfo of 'Fabric'. For Virtual Fabrics, one of the indices shall contain the value 'SNIA:VF_ID' and in the corresponding index for OtherIdentifyingInfo the value of the Virtual Fabric ID.

5.8.4 CIM_AdminDomain (SAN)and

AdminDomain representing the SAN.

Created By: Static
Modified By: Static
Deleted By: Static
Requirement: Mandatory.

Table 7 describes class CIM_AdminDomain (SAN).

Table 7 - SMI Referenced Properties/Methods for CIM_AdminDomain (SAN)

Properties	Flags	Requirement	Description and Notes
CreationClassName		Mandatory	Name of Class.
Name		Mandatory	An arbitrary name (implementation dependent).
NameFormat		Mandatory	Dependent on the arbitrary name chosen.
ElementName		Optional	A user friendly name for the SAN (implementation dependent).
OtherIdentifyingInfo		Mandatory	For a SAN AdminDomain this property shall contain the value 'SAN'.
IdentifyingDescriptions		Mandatory	For a SAN AdminDomain this property shall contain the value 'SNIA:DetailedType' in the index for the OtherIdentifyingInfo of 'SAN'.

Documents
Document Sharing Hub
Full document details: BS ISO/IEC 24775-6:2014