BS ISO/IEC 24775-6:2021

BSI Standards Publication

Information technology — Storage management

Part 6: Fabric

Documents
Document Sharing Hub

Full document details: BS ISO/IEC 24775-6:2021

National foreword

This British Standard is the UK implementation of ISO/IEC 24775-6:2021. It supersedes BS ISO/IEC 24775-6:2014, which is withdrawn.

The UK participation in its preparation was entrusted to Technical Committee ICT/1, Information systems co-ordination.

A list of organizations represented on this committee can be obtained on request to its committee manager.

Contractual and legal considerations

This publication has been prepared in good faith, however no representation, warranty, assurance or undertaking (express or implied) is or will be made, and no responsibility or liability is or will be accepted by BSI in relation to the adequacy, accuracy, completeness or reasonableness of this publication. All and any such responsibility and liability is expressly disclaimed to the full extent permitted by the law.

This publication is provided as is, and is to be used at the recipient's own risk.

The recipient is advised to consider seeking professional guidance with respect to its use of this publication.

This publication is not intended to constitute a contract. Users are responsible for its correct application.

© The British Standards Institution 2021
Published by BSI Standards Limited 2021

ISBN 978 0 539 13977 8

ICS 35.200

Compliance with a British Standard cannot confer immunity from legal obligations.

This British Standard was published under the authority of the Standards Policy and Strategy Committee on 30 April 2021.

Amendments/corrigenda issued since publication

Date	Text affected

Documents
Document Sharing Hub

Full document details: BS ISO/IEC 24775-6:2021

INTERNATIONAL STANDARD

ISO/IEC 24775-6

Second edition
2021-03

Information technology — Storage management —

Part 6: Fabric

Reference number
ISO/IEC 24775-6:2021(E)

Documents
Document Sharing Hub
© ISO/IEC 2021

Full document details: BS ISO/IEC 24775-6:2021

COPYRIGHT PROTECTED DOCUMENT

© ISO/IEC 2021

All rights reserved. Unless otherwise specified, or required in the context of its implementation, no part of this publication may be reproduced or utilized otherwise in any form or by any means, electronic or mechanical, including photocopying, or posting on the internet or an intranet, without prior written permission. Permission can be requested from either ISO at the address below or ISO's member body in the country of the requester.

ISO copyright office
CP 401 • Ch. de Blandonnet 8
CH-1214 Vernier, Geneva
Phone: +41 22 749 01 11
Email: copyright@iso.org
Website: www.iso.org

Published in Switzerland

© ISO/IEC 2021 – All rights reserved

Documents
Document Sharing Hub

Full document details: BS ISO/IEC 24775-6:2021

Foreword

ISO (the International Organization for Standardization) and IEC (the International Electrotechnical Commission) form the specialized system for worldwide standardization. National bodies that are members of ISO or IEC participate in the development of International Standards through technical committees established by the respective organization to deal with particular fields of technical activity. ISO and IEC technical committees collaborate in fields of mutual interest. Other international organizations, governmental and non-governmental, in liaison with ISO and IEC, also take part in the work.

The procedures used to develop this document and those intended for its further maintenance are described in the ISO/IEC Directives, Part 1. In particular, the different approval criteria needed for the different types of document should be noted (see www.iso.org/directives).

Attention is drawn to the possibility that some of the elements of this document may be the subject of patent rights. ISO and IEC shall not be held responsible for identifying any or all such patent rights. Details of any patent rights identified during the development of the document will be in the Introduction and/or on the ISO list of patent declarations received (see www.iso.org/patents) or the IEC list of patent declarations received (see http://patents.iec.ch).

Any trade name used in this document is information given for the convenience of users and does not constitute an endorsement.

For an explanation of the voluntary nature of standards, the meaning of ISO specific terms and expressions related to conformity assessment, as well as information about ISO's adherence to the World Trade Organization (WTO) principles in the Technical Barriers to Trade (TBT), see www.iso.org/iso/foreword.html.

This document was prepared by SNIA (as Storage Management Technical Specification, Part 6 Fabric, Version 1.8.0, Revision 5) and drafted in accordance with its editorial rules. It was adopted, under the JTC 1 PAS procedure, by Joint Technical Committee ISO/IEC JTC 1, *Information technology*.

This second edition cancels and replaces the first edition (ISO/IEC 24775-6:2014), which has been technically revised.

The main changes compared to the previous edition are as follows:

— USAGE text was revised to address code (now included in the front matter for all SNIA specifications)

— All recipes and their references were deleted.

— Instances of subprofile were changed to profile. In the annex, instances of subprofile were changed to component profile (TSG meeting voice vote).

— Profile versions and related text were updated. (TSG meeting voice vote).

— Indications have been replaced by DMTF Indications, and all affected clauses updated. (TSG meeting voice vote).

— Instances of Experimental within profiles already labeled as Experimental were removed to avoid confusion and redundancy. (Editorial change)

— CIM/XML was changed to CIM-XML (Response to ballot comments).

Documents
Document Sharing Hub

© ISO/IEC 2021 – All rights reserved

Full document details: BS ISO/IEC 24775-6:2021

— Annex: SMI-S Information Model.

— The CIM schema version was changed to 2.51 for V1.8.0 Rev3.

— Blades Profile

  — Added descriptions for References in CIM_ProductPhysicalComponent.
  — Changed the version to 1.7.0.

— Enhanced Zoning and Enhanced Zoning Control Profile (SMI TWG Reviews)

  — Fixed the version numbers on the Related Profiles to match what the profiles claim.

— Fabric Profile

  — Corrected the Related Profile for FabricVirtualFabrics to be Virtual Fabrics.
  — Fixed the version numbers on the Related Profiles to match what the profiles claim.
  — Deleted the MemberOfCollections in the CIM Elements for the filter collections that were deleted.
  — Defined the condition for Peer Zoning in CIM_ZoneSettingData ZoneMembershipSettingData to Zone).

— Fabric Views Profile

  — In FCSwitchView changed OperationalStatus to SwitchOperationalStatus and FCPortEnabledState to PortEnabledState.
  — In ConcreteComponentView changed Antecedent and Dependent to GroupComponent and PartComponent.
  — Changed the version of the profile to 1.7.0.
  — Changed the Central Class from FCTopologyView to CIM_ViewCapabilities (TSG-SMIS-SCR00333).

— FCoE Fabric (TSG-SMIS-SCR00331)

  — Reworked the profile to be a component profile of the Fabric Profile.
  — Removed the classes associated with experimental indications.
  — Added a definition of CIM_EthernetPort (which was missing).
  — Fixed a number of mifgen warnings.

— FDMI Profile

  — Changed the version of the Profile to be 1.8.0, since we expanded the Speed enumerations

— Inter Fabric Routing Profile

  — Added a SystemDevice between the IFR Switch and the IFR FCPort.
  — Changed the Profile version to 1.7.0.
  — Changed the Central Class from ComputerSystem to CIM_ComputerSystem (IFR Switch) (TSG-SMISSCR00333).

— N Port Virtualizer Profile

  — Fixed the version numbers on the Related Profiles to match what the profiles claim.
  — Changed the Central Class from FCPort to CIM_FCPort (Fabric NPIV) (TSG-SMIS-SCR00333).

Documents
Document Sharing Hub

© ISO/IEC 2021 – All rights reserved

Full document details: BS ISO/IEC 24775-6:2021

— Switch Partitioning Profile

  — Changed the name of the profile to "Switch Partitioning" to make the spec readable.
  — Changed “must” to “shall” in a number of CIM Element tables.
  — Changed the Central Class from ComputerSystem to CIM_ComputerSystem (Partitioning) (TSG-SMISSCR00333).

— Switch Profile

  — Fixed the version numbers on the Related Profiles to match what the profiles claim.
  — Changed the version of the profile to 1.8.0, due to changes to the enumeration of the Speed property.
  — Removed the Switch Configuration Data profile from Related Profiles table, since it has been removed from the spec.
  — Changed the name of the FabricSwitchPartitioning Profile to Switch Partitioning in the Related Profiles table.
  — Changed the Requirement for CIM_ElementSettingData (FCSwitchSettings to ComputerSystem) to Mandatory, since FCSwitchSettings and the Switch are Mandatory.

— Virtual Fabrics Profile

  — Changed the name of the profile to "Virtual Fabrics" to make the spec readable.

— Zone Control Profile

  — Changed the version of the Profile to be 1.8.0, since we added two methods.

— Annex B (Informative) Structure of Fabric Profiles (TSG-SMIS-SCR00331)

  — Updated Figure B.1 to show how FCoE Fabrics fits into the structure of Fabric profiles.

— References

  — Added DMTF DSP1054 v1.2.2, Indications Profile (and changed to V1.2.2 throughout book).
  — Removed SPC-2.
  — Moved SPC-3 reference from 2.2 to 2.1.

A list of all parts in the ISO/IEC 24775 series can be found on the ISO website.

Any feedback or questions on this document should be directed to the user’s national standards body. A complete listing of these bodies can be found at www.iso.org/members.html.

© ISO/IEC 2021 – All rights reserved

Documents
Document Sharing Hub
Full document details: BS ISO/IEC 24775-6:2021

Documents
Document Sharing Hub

Full document details: BS ISO/IEC 24775-6:2021

Intended Audience

This document is intended for use by individuals and companies engaged in developing, deploying, and promoting interoperable multi-vendor SANs through the Storage Networking Industry Association (SNIA) organization.

Changes to the Specification

Each publication of this specification is uniquely identified by a three-level identifier, comprised of a version number, a release number and an update number. The current identifier for this specification is version 1.8.0. Future publications of this specification are subject to specific constraints on the scope of change that is permissible from one publication to the next and the degree of interoperability and backward compatibility that should be assumed between products designed to different publications of this standard. The SNIA has defined three levels of change to a specification:

- Major Revision: A major revision of the specification represents a substantial change to the underlying scope or architecture of the SMI-S API. A major revision results in an increase in the version number of the version identifier (e.g., from version 1.x.x to version 2.x.x). There is no assurance of interoperability or backward compatibility between releases with different version numbers.
- Minor Revision: A minor revision of the specification represents a technical change to existing content or an adjustment to the scope of the SMI-S API. A minor revision results in an increase in the release number of the specification's identifier (e.g., from x.1.x to x.2.x). Minor revisions with the same version number preserve interoperability and backward compatibility.
- Update: An update to the specification is limited to minor corrections or clarifications of existing specification content. An update will result in an increase in the third component of the release identifier (e.g., from x.x.1 to x.x.2). Updates with the same version and minor release levels preserve interoperability and backward compatibility.

Typographical Conventions

Maturity Level

In addition to informative and normative content, this specification includes guidance about the maturity of emerging material that has completed a rigorous design review but has limited implementation in commercial products. This material is clearly delineated as described in the following sections. The typographical convention is intended to provide a sense of the maturity of the affected material, without altering its normative content. By recognizing the relative maturity of different sections of the standard, an implementer should be able to make more informed decisions about the adoption and deployment of different portions of the standard in a commercial product.

This specification has been structured to convey both the formal requirements and assumptions of the SMI-S API and its emerging implementation and deployment lifecycle. Over time, the intent is that all content in the specification will represent a mature and stable design, be verified by extensive implementation experience, assure consistent support for backward compatibility, and rely solely on content material that has reached a similar level of maturity. Unless explicitly labeled with one of the subordinate maturity levels defined for this specification, content is assumed to satisfy these requirements and is referred to as "Finalized". Since much of the evolving specification

content in any given release will not have matured to that level, this specification defines three subordinate levels of implementation maturity that identify important aspects of the content's increasing maturity and stability. Each subordinate maturity level is defined by its level of implementation experience, its stability and its reliance on other emerging standards. Each subordinate maturity level is identified by a unique typographical tagging convention that clearly distinguishes content at one maturity model from content at another level.

© ISO/IEC 2021 – All rights reserved

Documents
Document Sharing Hub
Full document details: BS ISO/IEC 24775-6:2021

Experimental Maturity Level

No material is included in this document unless its initial architecture has been completed and reviewed. Some content included in this document has complete and reviewed design, but lacks implementation experience and the maturity gained through implementation experience. This content is included in order to gain wider review and to gain implementation experience. This material is referred to as "Experimental". It is presented here as an aid to implementers who are interested in likely future developments within the SMI specification. The contents of an Experimental profile may change as implementation experience is gained. There is a high likelihood that the changed content will be included in an upcoming revision of the specification. Experimental material can advance to a higher maturity level as soon as implementations are available. Figure 1 is a sample of the typographical convention for Experimental content.

EXPERIMENTAL

Experimental content appears here.

EXPERIMENTAL

Figure 1 - Experimental Maturity Level Tag

Implemented Maturity Level

Profiles for which initial implementations have been completed are classified as "Implemented". This indicates that at least two different vendors have implemented the profile, including at least one provider implementation. At this maturity level, the underlying architecture and modeling are stable, and changes in future revisions will be limited to the correction of deficiencies identified through additional implementation experience. Should the material become obsolete in the future, it must be deprecated in a minor revision of the specification prior to its removal from subsequent releases. Figure 2 is a sample of the typographical convention for Implemented content.

IMPLEMENTED

Implemented content appears here.

IMPLEMENTED

Figure 2 - Implemented Maturity Level Tag

Stable Maturity Level

Once content at the Implemented maturity level has garnered additional implementation experience, it can be tagged at the Stable maturity level. Material at this maturity level has been implemented by three different vendors, including both a provider and a client. Should material that has reached this maturity level become obsolete, it may only be deprecated as part of a minor revision to the specification. Material at this maturity level that has been deprecated may only be removed from the specification as part of a major revision. A profile that has reached this maturity level is guaranteed to preserve backward compatibility from one minor specification revision to the next. As a result, Profiles at or above the Stable

© ISO/IEC 2021 – All rights reserved

Documents
Document Sharing Hub

Full document details: BS ISO/IEC 24775-6:2021

maturity level shall not rely on any content that is Experimental. Figure 3 is a sample of the typographical convention for Implemented content.

STABLE

Stable content appears here.

STABLE

Figure 3 - Stable Maturity Level Tag

Finalized Maturity Level

Content that has reached the highest maturity level is referred to as “Finalized.” In addition to satisfying the requirements for the Stable maturity level, content at the Finalized maturity level must solely depend upon or refine material that has also reached the Finalized level. If specification content depends upon material that is not under the control of the SNIA, and therefore not subject to its maturity level definitions, then the external content is evaluated by the SNIA to assure that it has achieved a comparable level of completion, stability, and implementation experience. Should material that has reached this maturity level become obsolete, it may only be deprecated as part of a major revision to the specification. A profile that has reached this maturity level is guaranteed to preserve backward compatibility from one minor specification revision to the next. Over time, it is hoped that all specification content will attain this maturity level. Accordingly, there is no special typographical convention, as there is with the other, subordinate maturity levels. Unless content in the specification is marked with one of the typographical conventions defined for the subordinate maturity levels, it should be assumed to have reached the Finalized maturity level.

Deprecated Material

Non-Experimental material can be deprecated in a subsequent revision of the specification. Sections identified as “Deprecated” contain material that is obsolete and not recommended for use in new development efforts. Existing and new implementations may still use this material, but shall move to the newer approach as soon as possible. The maturity level of the material being deprecated determines how long it will continue to appear in the specification. Implemented content shall be retained at least until the next revision of the specialization, while Stable and Finalized material shall be retained until the next major revision of the specification. Providers shall implement the deprecated elements as long as it appears in the specification in order to achieve backward compatibility. Clients may rely on deprecated elements, but are encouraged to use non-deprecated alternatives when possible.

Deprecated sections are documented with a reference to the last published version to include the deprecated section as normative material and to the section in the current specification with the replacement. Figure 4 contains a sample of the typographical convention for deprecated content.

DEPRECATED

Content that has been deprecated appears here.

DEPRECATED

Figure 4 - Deprecated Tag

© ISO/IEC 2021 – All rights reserved

Documents
Document Sharing Hub

Full document details: BS ISO/IEC 24775-6:2021

© ISO/IEC 2021 – All rights reserved

Documents
Document Sharing Hub

Full document details: BS ISO/IEC 24775-6:2021

Contents

List of Figures 17
List of Tables 19
Foreword 25
1 Scope 27
2 Normative References 29
2.1 Approved references 29
2.2 References under development 29
2.3 Other references 29
3 Terms, Definitions, Symbols, Abbreviations, and Conventions 31
4 Fabric Profile 33
4.1 Synopsis 33
4.2 Description 34
4.3 Health and Fault Management 40
4.4 Cascading Considerations 40
4.5 Methods of this Profile 40
4.6 Use Cases 44
4.7 CIM Elements 46
5 Enhanced Zoning and Enhanced Zone Control Profile 73
5.1 Synopsis 73
5.2 Description 73
5.3 Health and Fault Management 73
5.4 Cascading Considerations 73
5.5 Methods of this Profile 73
5.6 Use Cases 74
5.7 CIM Elements 74
6 Zone Control Profile 77
6.1 Synopsis 77
6.2 Description 77
6.3 Durable Names and Correlatable IDs of the Profile 77
6.4 Instrumentation Requirements 77
6.5 Health and Fault Management 77
6.6 Cascading Considerations 77
6.7 Methods of this Profile 78
6.8 Use Cases 83
6.9 CIM Elements 83
7 FDMI Profile 87
7.1 Synopsis 87
7.2 Description 87
7.3 Health and Fault Management 88
7.4 Cascading Considerations 88
7.5 Methods of this Profile 88
7.6 Use Cases 88
7.7 CIM Elements 89
8 Fabric Views Profile 99
8.1 Description 99
8.2 Health and Fault Management Consideration 102
8.3 Cascading Considerations 103

© ISO/IEC 2021 – All rights reserved

Documents
Document Sharing Hub

Full document details: BS ISO/IEC 24775-6:2021

8.4 Methods of the Profile ... 103
8.5 Use Cases ... 103
8.6 CIM Elements ... 103
9 Virtual Fabrics ... 109
9.1 Synopsis ... 109
9.2 Description ... 109
9.3 Health and Fault Management Consideration ... 112
9.4 Cascading Considerations ... 112
9.5 Methods of the Profile ... 112
9.6 Use Cases ... 112
9.7 CIM Elements ... 113
10 Switch Profile ... 115
10.1 Synopsis ... 115
10.2 Description ... 115
10.3 Health and Fault Management ... 120
10.4 Cascading Considerations ... 120
10.5 Methods of this Profile ... 120
10.6 Use Cases ... 120
10.7 CIM Elements ... 121
11 Blades Profile ... 139
11.1 Synopsis ... 139
11.2 Description ... 139
11.3 Instance Diagram ... 139
11.4 Health and Fault Management ... 139
11.5 Cascading Considerations ... 140
11.6 Methods of this Profile ... 140
11.7 Use Cases ... 140
11.8 CIM Elements ... 140
12 Switch Partitioning ... 145
12.1 Synopsis ... 145
12.2 Description ... 145
12.3 Health and Fault Management Consideration ... 147
12.4 Cascading Considerations ... 147
12.5 Methods of the Profile ... 147
12.6 Use Cases ... 147
12.7 CIM Elements ... 147
13 N Port Virtualizer Profile ... 155
13.1 Synopsis ... 155
13.2 Description ... 155
13.3 Implementation ... 156
13.4 Health and Fault Management Consideration ... 157
13.5 Cascading Considerations ... 157
13.6 Methods of the Profile ... 157
13.7 Use Cases ... 157
13.8 CIM Elements ... 157
14 Inter Fabric Routing Profile ... 165
14.1 Synopsis ... 165
14.2 Description ... 165
14.3 Health and Fault Management Consideration ... 168
14.4 Cascading Considerations ... 168

© ISO/IEC 2021 – All rights reserved

Documents
Document Sharing Hub

Full document details: BS ISO/IEC 24775-6:2021

14.5 Methods of the Profile 168
14.6 Use Cases 168
14.7 CIM Elements 169
15 FCoE Fabric 177
15.1 Synopsis 177
15.2 Description 177
15.3 Health and Fault Management Consideration 178
15.4 Methods of the Profile 178
15.5 Use Cases 178
15.6 CIM Elements 179
Annex A (informative) SMI-S Information Model 189
Annex B (Informative) Structure of Fabric Profiles 191

© ISO/IEC 2021 – All rights reserved

Documents
Document Sharing Hub
Full document details: BS ISO/IEC 24775-6:2021

© ISO/IEC 2021 – All rights reserved

Documents
Document Sharing Hub

Full document details: BS ISO/IEC 24775-6:2021

LIST OF FIGURES

Figure 1 - Experimental Maturity Level Tag 10
Figure 2 - Implemented Maturity Level Tag 10
Figure 3 - Stable Maturity Level Tag 11
Figure 4 - Deprecated Tag 11
Figure 5 - Fabric Instance 34
Figure 6 - NPIV Instance 36
Figure 7 - Zoning Instance (AdminDomain) 37
Figure 8 - Zoning Instance (ComputerSystem) 38
Figure 9 - Zoning Instance (Peer Zoning) 39
Figure 10 - FDMI Instance 88
Figure 11 - Class Diagram for Fabric View Classes 100
Figure 12 - Fabric View Class Capabilities 101
Figure 13 - FCTopology View Class 102
Figure 14 - FCSwitch View Class 102
Figure 15 - RegisteredProfile, AdminDomain, and ComputerSystem Relationships 110
Figure 16 - Two Virtual Fabric and Two Partitioning Systems 111
Figure 17 - Two Virtual Fabrics and One Partitioning System 112
Figure 18 - Switch Instance Diagram 117
Figure 19 - Trunking Instance Diagram 118
Figure 20 - Switch Blade Instance 139
Figure 21 - Switch ComputerSystem and Partitioning System 145
Figure 22 - Switch and Partitioning System and Partitioning Ports 146
Figure 23 - Underlying System Port Settings and Capabilities 146
Figure 24 - N Port Virtualizer 156
Figure 25 - IFR Switch Topology 166
Figure 26 - Inter Fabric Routing Ports 168
Figure 27 - FCoE Fabric Instance Diagram 178
Figure B.1 The structure of the Fabric Part Profiles 191
Figure B.2 AdminDomain Properties 194
Figure B.3 Associations on AdminDomains 196
Figure B.4 Properties of various Switches 198
Figure B.5 Associations on Switches 200
Figure B.6 General ComputerSystem Properties 202
Figure B.7 General ComputerSystem Associations 204
Figure B.8 Switch FCPort Properties 206
Figure B.9 Switch FCPort Associations 208
Figure B.10 Non-Switch Port Properties 210
Figure B.11 Non-Switch Port Associations 212

© ISO/IEC 2021 – All rights reserved

Documents
Document Sharing Hub

Full document details: BS ISO/IEC 24775-6:2021

© ISO/IEC 2021 – All rights reserved

Documents
Document Sharing Hub

Full document details: BS ISO/IEC 24775-6:2021

LIST OF TABLES

Table 1 - Supported Profiles for Fabric 33
Table 2 - Port OperationalStatus 45
Table 3 - OperationalStatus for ComputerSystem 45
Table 4 - CIM Elements for Fabric 46
Table 5 - SMI Referenced Properties/Methods for CIM_ActiveConnection 48
Table 6 - SMI Referenced Properties/Methods for CIM_AdminDomain (Fabric) 49
Table 7 - SMI Referenced Properties/Methods for CIM_AdminDomain (SAN) 49
Table 8 - SMI Referenced Properties/Methods for CIM_Component (Platform to Fabric) 50
Table 9 - SMI Referenced Properties/Methods for CIM_Component (Switch to Fabric) 50
Table 10 - SMI Referenced Properties/Methods for CIM_ComputerSystem (Host Platform) 51
Table 11 - SMI Referenced Properties/Methods for CIM_ComputerSystem (Partitioned Switch) 51
Table 12 - SMI Referenced Properties/Methods for CIM_ComputerSystem (Storage Platform) 52
Table 13 - SMI Referenced Properties/Methods for CIM_ComputerSystem (Switch) 53
Table 14 - SMI Referenced Properties/Methods for CIM_ConnectivityCollection 53
Table 15 - SMI Referenced Properties/Methods for CIM_ContainedDomain 54
Table 16 - SMI Referenced Properties/Methods for CIM_DeviceSAPImplementation (Non-Switch to FCPort) 54
Table 17 - SMI Referenced Properties/Methods for CIM_DeviceSAPImplementation (Switch to FCPort) 55
Table 18 - SMI Referenced Properties/Methods for CIM_ElementCapabilities (ZoneCapabilities to Fabric.) 55
Table 19 - SMI Referenced Properties/Methods for CIM_ElementCapabilities (ZoneCapabilities to Switch.) 55
Table 20 - SMI Referenced Properties/Methods for CIM_ElementSettingData (ZoneMembershipSettingData to Zone)56
Table 21 - SMI Referenced Properties/Methods for CIM_FCActiveConnection 56
Table 22 - SMI Referenced Properties/Methods for CIM_FCPort (Host FCPort) 57
Table 23 - SMI Referenced Properties/Methods for CIM_FCPort (Host NPIV FCPort) 58
Table 24 - SMI Referenced Properties/Methods for CIM_FCPort (Partitioned Switch FCPort) 59
Table 25 - SMI Referenced Properties/Methods for CIM_FCPort (Storage FCPort) 60
Table 26 - SMI Referenced Properties/Methods for CIM_FCPort (Switch FCPort) 61
Table 27 - SMI Referenced Properties/Methods for CIM_HostedAccessPoint (AdminDomain to ProtocolEndpoint)62
Table 28 - SMI Referenced Properties/Methods for CIM_HostedAccessPoint (ComputerSystem to ProtocolEndpoint)63
Table 29 - SMI Referenced Properties/Methods for CIM_HostedCollection (Fabric to ConnectivityCollection) 63
Table 30 - SMI Referenced Properties/Methods for CIM_HostedCollection (System to LogicalPortGroup) 63
Table 31 - SMI Referenced Properties/Methods for CIM_HostedCollection (Zones or ZoneSets to Fabric) 64
Table 32 - SMI Referenced Properties/Methods for CIM_HostedCollection (Zones or ZoneSets to Switch) 64
Table 33 - SMI Referenced Properties/Methods for CIM_HostedDependency 65
Table 34 - SMI Referenced Properties/Methods for CIM_LogicalPortGroup 65
Table 35 - SMI Referenced Properties/Methods for CIM_MemberOfCollection (ConnectivityCollection to ProtocolEndpoint)65
Table 36 - SMI Referenced Properties/Methods for CIM_MemberOfCollection (LogicalPortGroup to FCPort) 66
Table 37 - SMI Referenced Properties/Methods for CIM_MemberOfCollection (ZoneSet to Zone) 66
Table 38 - SMI Referenced Properties/Methods for CIM_ProtocolEndpoint 66
Table 39 - SMI Referenced Properties/Methods for CIM_SystemDevice (Non-Switch FCPort to Fabric) 67
Table 40 - SMI Referenced Properties/Methods for CIM_SystemDevice (Non-Switch FCPort to Platform) 67
Table 41 - SMI Referenced Properties/Methods for CIM_SystemDevice (Switch FCPort to Switch) 68
Table 42 - SMI Referenced Properties/Methods for CIM_Zone (Active) 68

© ISO/IEC 2021 – All rights reserved

Documents
Document Sharing Hub
Full document details: BS ISO/IEC 24775-6:2021

Table 43 - SMI Referenced Properties/Methods for CIM_Zone (Inactive) 68
Table 44 - SMI Referenced Properties/Methods for CIM_ZoneCapabilities 69
Table 45 - SMI Referenced Properties/Methods for CIM_ZoneMembershipSettingData 70
Table 46 - SMI Referenced Properties/Methods for CIM_ZoneSet (Active) 70
Table 47 - SMI Referenced Properties/Methods for CIM_ZoneSet (Inactive) 71
Table 48 - SMI Referenced Properties/Methods for CIM_ZoneSettingData (ZoneMembershipSettingData to Zone)71
Table 49 - Supported Profiles for Enhanced Zoning and Enhanced Zoning Control 73
Table 50 - CIM Elements for Enhanced Zoning and Enhanced Zoning Control 74
Table 51 - SMI Referenced Properties/Methods for CIM_ElementSettingData (ZoneMembershipSettingData to NamedAddressCollection)74
Table 52 - SMI Referenced Properties/Methods for CIM_HostedCollection (AdminDomain to Collection) 75
Table 53 - SMI Referenced Properties/Methods for CIM_HostedCollection (ComputerSystem to Collection) 75
Table 54 - SMI Referenced Properties/Methods for CIM_MemberOfCollection 75
Table 55 - SMI Referenced Properties/Methods for CIM_NamedAddressCollection 76
Table 56 - SMI Referenced Properties/Methods for CIM_ZoneService (Zone Service) 76
Table 57 - CIM Elements for Zone Control 83
Table 58 - SMI Referenced Properties/Methods for CIM_HostedService (Fabric (AdminDomain) to Zone-Service)84
Table 59 - SMI Referenced Properties/Methods for CIM_HostedService (Switch (ComputerSystem) to ZoneService)84
Table 60 - SMI Referenced Properties/Methods for CIM_ZoneService (Zone Service) 84
Table 61 - CIM Elements for FDMI 89
Table 62 - SMI Referenced Properties/Methods for CIM_Component (Host Server to Fabric) 90
Table 63 - SMI Referenced Properties/Methods for CIM_ComputerSystem (Host Server) 90
Table 64 - SMI Referenced Properties/Methods for CIM_ControlledBy 90
Table 65 - SMI Referenced Properties/Methods for CIM_ElementSoftwareIdentity 91
Table 66 - SMI Referenced Properties/Methods for CIM_FCPort (Host FCPort) 91
Table 67 - SMI Referenced Properties/Methods for CIM_HostedCollection (System to LogicalPortGroup) 92
Table 68 - SMI Referenced Properties/Methods for CIM_InstalledSoftwareIdentity 93
Table 69 - SMI Referenced Properties/Methods for CIM_MemberOfCollection (LogicalPortGroup to FCPort) ...93
Table 70 - SMI Referenced Properties/Methods for CIM_PhysicalPackage (HBA Package) 93
Table 71 - SMI Referenced Properties/Methods for CIM_PortController 94
Table 72 - SMI Referenced Properties/Methods for CIM_Product (HBA Product) 94
Table 73 - SMI Referenced Properties/Methods for CIM_ProductPhysicalComponent 95
Table 74 - SMI Referenced Properties/Methods for CIM_Realizes 95
Table 75 - SMI Referenced Properties/Methods for CIM_SoftwareIdentity (Driver) 96
Table 76 - SMI Referenced Properties/Methods for CIM_SoftwareIdentity (Firmware) 96
Table 77 - SMI Referenced Properties/Methods for CIM_SoftwareIdentity (Option ROM) 97
Table 78 - SMI Referenced Properties/Methods for CIM_SystemDevice (ComputerSystem to FCPort) 97
Table 79 - SMI Referenced Properties/Methods for CIM_SystemDevice (ComputerSystem to PortController) ..98
Table 80 - CIM Elements for Fabric Views 103
Table 81 - SMI Referenced Properties/Methods for CIM_ElementCapabilities (View Capabilities) 104
Table 82 - SMI Referenced Properties/Methods for CIM_ElementView (View to FC Port) 104
Table 83 - SMI Referenced Properties/Methods for CIM_ElementView (View to Switch) 104
Table 84 - SMI Referenced Properties/Methods for CIM_ViewCapabilities 105
Table 85 - SMI Referenced Properties/Methods for CIM_ConcreteComponentView (FCSwitchView to Fab-ric)105
Table 86 - SMI Referenced Properties/Methods for FC_ConcreteComponentView (FCTopologyView to Fab-ric)106

© ISO/IEC 2021 – All rights reserved

Documents
Document Sharing Hub

Full document details: BS ISO/IEC 24775-6:2021

Table 87 - SMI Referenced Properties/Methods for CIM_FCSwitchView 106
Table 88 - SMI Referenced Properties/Methods for CIM_FCTopologyView 108
Table 89 - Supported Profiles for Virtual Fabrics 109
Table 90 - CIM Elements for FabricVirtualFabrics 113
Table 91 - SMI Referenced Properties/Methods for CIM_Component (AdminDomain to Partitioning CS) 113
Table 92 - SMI Referenced Properties/Methods for CIM_ElementConformsToProfile (SAN AdminDomain to Virtual Fabrics RegisteredProfile)114
Table 93 - Supported Profiles for Switch 115
Table 94 - DetailedPortState for FCPort 119
Table 95 - PortAvailability for FCPort 119
Table 96 - CIM Elements for Switch 121
Table 97 - SMI Referenced Properties/Methods for CIM_ComputerSystem (Partitioned Switch) 122
Table 98 - SMI Referenced Properties/Methods for CIM_ComputerSystem (Switch) 123
Table 99 - SMI Referenced Properties/Methods for CIM_ComputerSystemPackage 125
Table 100 - SMI Referenced Properties/Methods for CIM_ElementCapabilities (FCPort to FCPortCapabilities)125
Table 101 - SMI Referenced Properties/Methods for CIM_ElementCapabilities (System to FCSwitchCapabilities)125
Table 102 - SMI Referenced Properties/Methods for CIM_ElementSettingData (FCPortSettings to FCPort) 126
Table 103 - SMI Referenced Properties/Methods for CIM_ElementSettingData (FCSwitchSettings to ComputerSystem)126
Table 104 - SMI Referenced Properties/Methods for CIM_ElementStatisticalData (FCPortRateStatistics to FCPort)126
Table 105 - SMI Referenced Properties/Methods for CIM_ElementStatisticalData (FCPortStatistics to FCPort)127
Table 106 - SMI Referenced Properties/Methods for CIM_FCPort (Partitioned Switch FCPort) 127
Table 107 - SMI Referenced Properties/Methods for CIM_FCPort (Switch FCPort) 128
Table 108 - SMI Referenced Properties/Methods for CIM_FCPortCapabilities 130
Table 109 - SMI Referenced Properties/Methods for CIM_FCPortRateStatistics 131
Table 110 - SMI Referenced Properties/Methods for CIM_FCPortSettings 131
Table 111 - SMI Referenced Properties/Methods for CIM_FCPortStatistics 132
Table 112 - SMI Referenced Properties/Methods for CIM_FCSwitchCapabilities 134
Table 113 - SMI Referenced Properties/Methods for CIM_FCSwitchSettings 134
Table 114 - SMI Referenced Properties/Methods for CIM_HostedCollection (Redundancy Set) 135
Table 115 - SMI Referenced Properties/Methods for CIM_HostedCollection (Statistics Collection) 135
Table 116 - SMI Referenced Properties/Methods for CIM_MemberOfCollection (FCPort to RedundancySet) 136
Table 117 - SMI Referenced Properties/Methods for CIM_MemberOfCollection (NetworkPortStatistics to StatisticalCollection)136
Table 118 - SMI Referenced Properties/Methods for CIM_ProtocolEndpoint 136
Table 119 - SMI Referenced Properties/Methods for CIM_RedundancySet 137
Table 120 - SMI Referenced Properties/Methods for CIM_StatisticsCollection 137
Table 121 - SMI Referenced Properties/Methods for CIM_SystemDevice 138
Table 122 - CIM Elements for Blades 140
Table 123 - SMI Referenced Properties/Methods for CIM_LogicalModule 141
Table 124 - SMI Referenced Properties/Methods for CIM_ModulePort 141
Table 125 - SMI Referenced Properties/Methods for CIM_PhysicalPackage (Logical Module) 141
Table 126 - SMI Referenced Properties/Methods for CIM_Product (Blade) 142
Table 127 - SMI Referenced Properties/Methods for CIM_ProductPhysicalComponent 142
Table 128 - SMI Referenced Properties/Methods for CIM_Realizes (Logical Module Package) 143
Table 129 - SMI Referenced Properties/Methods for CIM_SystemDevice (Logical Module) 143

© ISO/IEC 2021 – All rights reserved

Documents
Document Sharing Hub
Full document details: BS ISO/IEC 24775-6:2021

Table 130 - Supported Profiles for SwitchPartitioning 145
Table 131 - CIM Elements for SwitchPartitioning 147
Table 132 - SMI Referenced Properties/Methods for CIM_ComputerSystem (Partitioned) 148
Table 133 - SMI Referenced Properties/Methods for CIM_ComputerSystem (Partitioning)....149
Table 134 - SMI Referenced Properties/Methods for CIM_ElementCapabilities (Association between NetworkPort and NetworkPortCapabilities)149
Table 135 - SMI Referenced Properties/Methods for CIM_ElementConformsToProfile (Partitioning ComputerSystem to Switch Partitioning RegisteredProfile)149
Table 136 - SMI Referenced Properties/Methods for CIM_ElementSettingData (Association between NetworkPort and NetworkPortSettings)150
Table 137 - SMI Referenced Properties/Methods for CIM_FCPort (Partitioned)....150
Table 138 - SMI Referenced Properties/Methods for CIM_HostedDependency (NetworkPort to FCPort)....151
Table 139 - SMI Referenced Properties/Methods for CIM_HostedDependency (Partitioning CS to Partitioned CS)151
Table 140 - SMI Referenced Properties/Methods for CIM_NetworkPort (Partitioning)....152
Table 141 - SMI Referenced Properties/Methods for CIM_NetworkPortCapabilities 152
Table 142 - SMI Referenced Properties/Methods for CIM_NetworkPortSettings 153
Table 143 - SMI Referenced Properties/Methods for CIM_SystemDevice (FCPort to Partitioned ComputerSystem)153
Table 144 - SMI Referenced Properties/Methods for CIM_SystemDevice (NetworkPort to ComputerSystem)..153
Table 145 - Supported Profiles for N Port Virtualizer....155
Table 146 - CIM Elements for N Port Virtualizer....157
Table 147 - SMI Referenced Properties/Methods for CIM_Component (N Port Virtualizer to Fabric)....158
Table 148 - SMI Referenced Properties/Methods for CIM_ComputerSystem (N Port Virtualizer) 158
Table 149 - SMI Referenced Properties/Methods for CIM_ComputerSystemPackage (N Port Virtualizer to Physical Package)159
Table 150 - SMI Referenced Properties/Methods for CIM_DeviceSAPImplementation (ProtocolEndpoint to Gateway FCPort)159
Table 151 - SMI Referenced Properties/Methods for CIM_DeviceSAPImplementation (ProtocolEndpoint to NPIV FCPort)159
Table 152 - SMI Referenced Properties/Methods for CIM_FCActiveConnection (Gateway) 160
Table 153 - SMI Referenced Properties/Methods for CIM_FCActiveConnection (N Port Virtualiztion)....160
Table 154 - SMI Referenced Properties/Methods for CIM_FCPort (Fabric NPIV)....161
Table 155 - SMI Referenced Properties/Methods for CIM_FCPort (Gateway)....162
Table 156 - SMI Referenced Properties/Methods for CIM_HostedAccessPoint (N Port Virtualizer System to ProtocolEndpoint)163
Table 157 - SMI Referenced Properties/Methods for CIM_LogicalIdentity (NPIV Port to Switch Port) 163
Table 158 - SMI Referenced Properties/Methods for CIM_ProtocolEndpoint (N Port Virtualizer)....163
Table 159 - SMI Referenced Properties/Methods for CIM_SystemDevice (N Port Virtualizer Gateway FCPort to Gateway System)164
Table 160 - SMI Referenced Properties/Methods for CIM_SystemDevice (N Port Virtualizer NPIV FCPort to Gateway System)164
Table 161 - CIM Elements for Inter Fabric Routing 169
Table 162 - SMI Referenced Properties/Methods for CIM_Component (Backbone Switch to Fabric) 169
Table 163 - SMI Referenced Properties/Methods for CIM_Component (IFR Switch to Fabric) 170
Table 164 - SMI Referenced Properties/Methods for CIM_ComputerSystem (Backbone Switch)....170
Table 165 - SMI Referenced Properties/Methods for CIM_ComputerSystem (IFR Switch) 171
Table 166 - SMI Referenced Properties/Methods for CIM_FCActiveConnection 172
Table 167 - SMI Referenced Properties/Methods for CIM_FCPort (IFR FCPort)....173
Table 168 - SMI Referenced Properties/Methods for CIM_ProtocolEndpoint 174
Table 169 - SMI Referenced Properties/Methods for CIM_SystemDevice....175

© ISO/IEC 2021 – All rights reserved

Documents
Document Sharing Hub

Full document details: BS ISO/IEC 24775-6:2021

Table 170 - CIM Elements for FCoE Fabric....179
Table 171 - SMI Referenced Properties/Methods for CIM_AdminDomain (Ethernet Network)....180
Table 172 - SMI Referenced Properties/Methods for CIM_Component (Switch to Ethernet Network)....180
Table 173 - SMI Referenced Properties/Methods for CIM_ComputerSystem (Ethernet Switch)....181
Table 174 - SMI Referenced Properties/Methods for CIM_ConnectivityCollection (LANEndpoints to Ethernet-Network)181
Table 175 - SMI Referenced Properties/Methods for CIM_DeviceSAPImplementation (Ethernet Switch Ethernetport to LANEndpoint)182
Table 176 - SMI Referenced Properties/Methods for CIM_DeviceSAPImplementation (Non-Switch Ethernet-Port to LANEndpoint)182
Table 177 - SMI Referenced Properties/Methods for CIM_ActiveConnection (Links transported over Ethernet (FCoE))182
Table 178 - SMI Referenced Properties/Methods for CIM_EthernetPort (Host EthernetPort)....183
Table 179 - SMI Referenced Properties/Methods for CIM_EthernetPort (Storage EthernetPort))....183
Table 180 - SMI Referenced Properties/Methods for CIM_EthernetPort (Switch EthernetPort))....184
Table 181 - SMI Referenced Properties/Methods for CIM_HostedAccessPoint (AdminDomain to LANEndpoint)184
Table 182 - SMI Referenced Properties/Methods for CIM_HostedAccessPoint (ComputerSystem to LANEndpoint)185
Table 183 - SMI Referenced Properties/Methods for CIM_HostedCollection (Ethernet Network AdminDomain to ConnectivityCollection)185
Table 184 - SMI Referenced Properties/Methods for CIM_HostedDependency (ComputerSystem (Ethernet Switch) to Partitioning ComputerSystem)186
Table 185 - SMI Referenced Properties/Methods for CIM_HostedDependency (FCPort to EthernetPort)....186
Table 186 - SMI Referenced Properties/Methods for CIM_LANEndpoint (Ethernet ProtocolEndpoint)....186
Table 187 - SMI Referenced Properties/Methods for CIM_MemberOfCollection (ConnectivityCollection to LANEndpoint)187
Table 188 - SMI Referenced Properties/Methods for CIM_SystemDevice (Switch EthernetPort to Switch)....187
Table 189 - SMI Referenced Properties/Methods for CIM_SystemDevice (non-Switch EthernetPort to Ethernet AdminDomain)188
Table B.1 AdminDomain Properties 193
Table B.2 AdminDomain Associations 194
Table B.3 Switch ComputerSystem Properties 197
Table B.4 Switch ComputerSystem Associations 198
Table B.5 Non-Switch ComputerSystem Properties 201
Table B.6 Non-Switch ComputerSystem Associations 202
Table B.7 Switch FCPort Properties 205
Table B.8 Switch FCPort Associations 206
Table B.9 Non-Switch Port Properties 209
Table B.10 Non-Switch Port Associations 210

© ISO/IEC 2021 – All rights reserved

Documents
Document Sharing Hub

Full document details: BS ISO/IEC 24775-6:2021

© ISO/IEC 2021 – All rights reserved

Documents
Document Sharing Hub

Full document details: BS ISO/IEC 24775-6:2021

FOREWORD

The Fabric Part of the *Storage Management Technical Specification* defines management profiles for Autonomous (top level) profiles for programs and devices whose central function is providing support for storage networking. The Fabric Part includes fabric management including topology and device management for switches. The Fabric part also provides management of extenders that pass fibre channel frames over other protocols as well as a gateway that maps and translates iSCSI to Fibre Channel. As part of fabric management, this specification also has controls for fibre channel zoning and fibre channel security.

Parts of this Standard

This standard is subdivided in the following parts:

- *Storage Management Technical Specification, Part 1 Overview, 1.8.0 Rev 4*
- *Storage Management Technical Specification, Part 2 Common Architecture, 1.8.0 Rev 4*
- *Storage Management Technical Specification, Part 3 Common Profiles, 1.8.0 Rev 4*
- *Storage Management Technical Specification, Part 4 Block Devices, 1.8.0 Rev 4*
- *Storage Management Technical Specification, Part 5 Filesystems, 1.8.0 Rev 4*
- *Storage Management Technical Specification, Part 6 Fabric, 1.8.0 Rev 4*
- *Storage Management Technical Specification, Part 7 Host Elements, 1.8.0 Rev 4*
- *Storage Management Technical Specification, Part 8 Media Libraries, 1.8.0 Rev 4*

SNIA Web Site

Current SNIA practice is to make updates and other information available through their web site at http://www.snia.org

SNIA Address

Requests for interpretation, suggestions for improvement and addenda, or defect reports are welcome. They should be sent via the SNIA Feedback Portal at http://www.snia.org/feedback/ or by mail to the Storage Networking Industry Association, 4360 ArrowsWest Drive, Colorado Springs, Colorado 80907, U.S.A.

© ISO/IEC 2021 – All rights reserved

Documents
Document Sharing Hub

Full document details: BS ISO/IEC 24775-6:2021

© ISO/IEC 2021 – All rights reserved

Documents
Document Sharing Hub

Full document details: BS ISO/IEC 24775-6:2021

1 Scope

The *Storage Management Technical Specification, Part 6 Fabric* defines management profiles for Autonomous (top level) profiles for programs and devices whose central function is providing support for storage networking. This version of *Storage Management Technical Specification, Part 6 Fabric* includes these autonomous profiles:

- Fabric

  This profile defines the model and functions of a storage network including topology and zoning control.

- Switch

  This profile defines the model and functions of a Fibre Channel Switch including state, status, and control of the device and it's connections and product information,

- Extender

  This profile defines the model and functions of a networking device that allows for fibre channel to be extended over other networks, and specifically over IP (FCIP).

© ISO/IEC 2021 – All rights reserved

Documents
Document Sharing Hub

Full document details: BS ISO/IEC 24775-6:2021

© ISO/IEC 2021 – All rights reserved

Documents
Document Sharing Hub

Full document details: BS ISO/IEC 24775-6:2021

2 Normative References

The following referenced documents are indispensable for the application of this document. For dated references, only the edition cited applies. For undated references, the latest edition of the referenced document (including any amendments) applies.

2.1 Approved references

ISO/IEC 14776-452 SCSI Primary Commands - 3 (SPC-3) [ANSI INCITS 408-2005]

2.2 References under development

Storage Management Technical Specification, Part 2 Common Architecture, 1.8.0 Rev 4

Storage Management Technical Specification, Part 3 Common Profiles, 1.8.0 Rev 4

2.3 Other references

DMTF DSP1054 Indications Profile 1.2.2
http://www.dmtf.org/sites/default/files/standards/documents/DSP1054_1.2.2.pdf

© ISO/IEC 2021 – All rights reserved

Documents
Document Sharing Hub

Full document details: BS ISO/IEC 24775-6:2021

© ISO/IEC 2021 – All rights reserved

Documents
Document Sharing Hub

Full document details: BS ISO/IEC 24775-6:2021

3 Terms, Definitions, Symbols, Abbreviations, and Conventions

For the purposes of this document, the terms, definitions, symbols, abbreviations, and conventions given in *Storage Management Technical Specification, Part 2 Common Architecture, 1.8.0 Rev 4* apply.

© ISO/IEC 2021 – All rights reserved

Documents
Document Sharing Hub

Full document details: BS ISO/IEC 24775-6:2021

© ISO/IEC 2021 – All rights reserved

Documents
Document Sharing Hub

Full document details: BS ISO/IEC 24775-6:2021

STABLE

4 Fabric Profile

4.1 Synopsis

Profile Name: Fabric (Autonomous Profile)

Version: 1.8.0

Organization: SNIA

Central Class: AdminDomain

Scoping Class: AdminDomain

Related Profiles: Table 1 describes the supported profiles for Fabric.

Table 1 - Supported Profiles for Fabric

Profile Name	Organization	Version	Requirement	Description
Zone Control	SNIA	1.8.0	Optional	
Enhanced Zoning and Enhanced Zoning Control	SNIA	1.4.0	Optional	
Virtual Fabrics	SNIA	1.5.0	Optional	Experimental.
N Port Virtualizer	SNIA	1.7.0	Optional	Experimental.
FDMI	SNIA	1.8.0	Optional	
Fabric Views	SNIA	1.7.0	Optional	Experimental.
FCoE Fabric	SNIA	1.8.0	Optional	Experimental.
Launch In Context	DMTF	1.0.0	Optional	Experimental. See DSP1102, version 1.0.0
Indications	DMTF	1.2.2	Mandatory	See DSP1054, version 1.2.2

© ISO/IEC 2021 – All rights reserved

Documents
Document Sharing Hub

Full document details: BS ISO/IEC 24775-6:2021

4.2 Description

4.2.1 Instance Diagram

Figure 7: "Fabric Instance" illustrates the basic elements of the Fabric Profile.

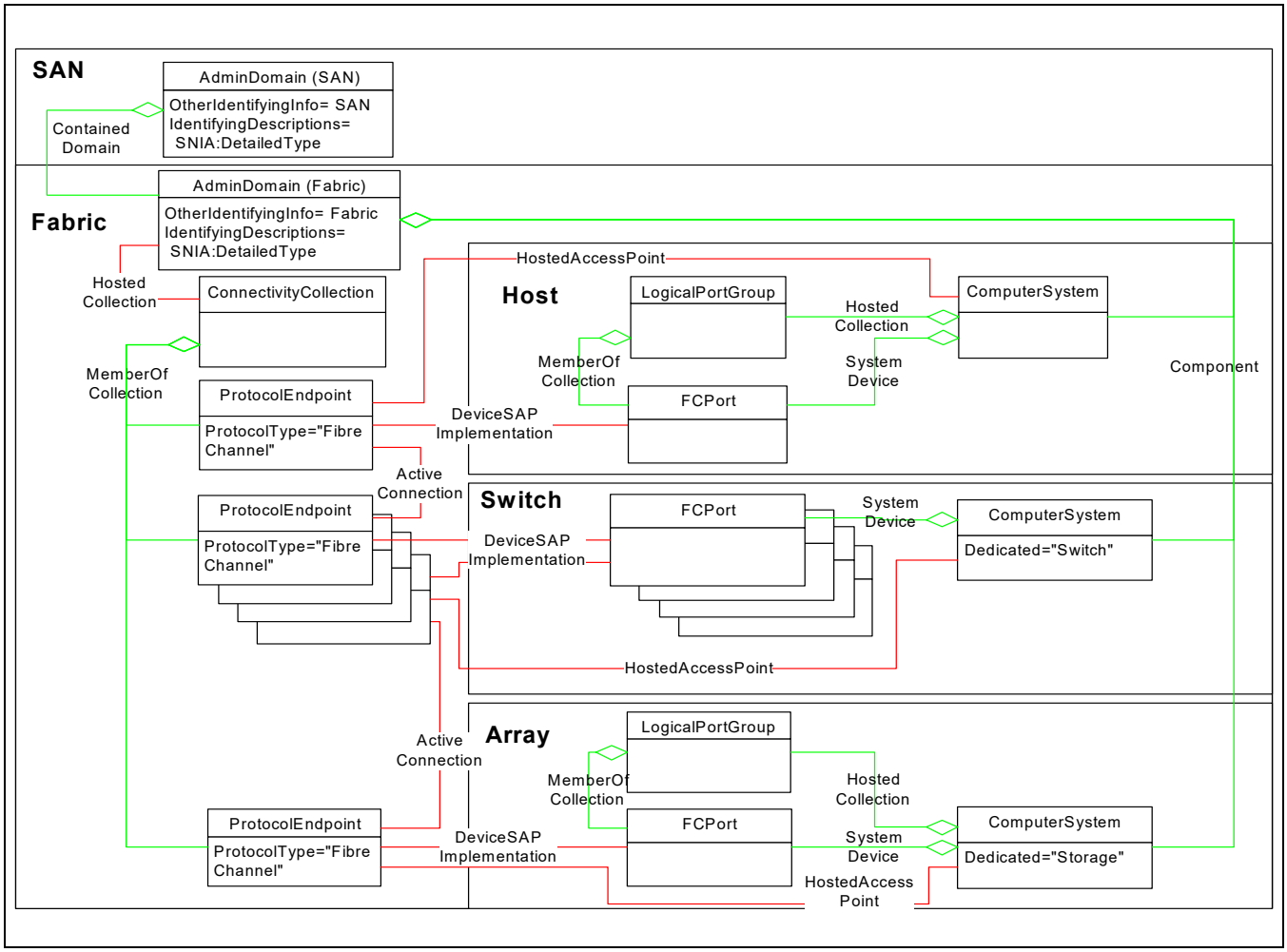

Figure 7 - Fabric Instance

4.2.2 SANS and Fabrics as AdminDomains

A SAN and Fabric are represented in CIM by AdminDomain. A SAN contains one or more Fabrics, which are modeled as AdminDomains. The “containment” of Fabrics to SANs is through the association ContainedDomain. AdminDomain is sub-classed from System. This is significant because a SAN and a Fabric can be considered a group of components that operate together as a single system and should be/ are managed as such. The relationship of the Fabrics in a SAN is intended to be able to aggregate all the Fabrics that are in the same physical topology. The possible use cases include: Fibre Channel Virtual Fabrics which have multiple Virtual Fabrics in the same underlying physical topology, Fibre Channel Inter-Fabric Routing which routes Fibre Channel frames between Fabrics, and redundant Fabrics where two physically separate networks connect the same set of hosts and storage.

An AdminDomain in CIM is keyed by the property Name with an associated optional property NameFormat. The naming convention for SANs are left up to the implementation, but the Name shall be correlatable (the same) when multiple agents are managing the same SAN for Virtual Fabric (VF) and Inter-Fabric Routing (IFR).

© ISO/IEC 2021 – All rights reserved

Documents Document Sharing Hub

Full document details: BS ISO/IEC 24775-6:2021

For Fibre Channel Fabrics, the identifier (AdminDomain.Name) is the Fabric WWN as reported by the fibre channel fabric services. The AdminDomain for the Fibre Channel Fabric shall have a NameFormat of WWN.

4.2.3 Fabrics and Topology

A Fabric in CIM minimally contains a ConnectivityCollection and its component systems. They are associated to the Fabric by the association Component. For the purposes of this discussion, it is assumed one models both.

ConnectivityCollection represents the foundation necessary for routing (and is the reason it is defined in the Network model). A ConnectivityCollection groups a set of ProtocolEndpoints that are able to communicate with each other directly. The ProtocolEndpoint is associated to the ConnectivityCollection by MemberOfCollection. A link is represented by the association ActiveConnection, which associates two ProtocolEndpoints, defined as a connection that is currently carrying traffic or is configured to carry traffic.

It is important at this point to clarify the relationship (or use) of the ProtocolEndpoint versus the use of FCPort (discussed later). A NetworkPort (from which FCPort is subclassed) is the device that is used to represent the logical aspects of the link and data layers. The ProtocolEndpoint is used to represent the higher network layers for routing. This is best understood when thinking about Ethernet and IP, but applies to fibre channel also. When two ProtocolEndpoints are capable of communicating, the association ActiveConnection is used to represent the capability to communicate and completes the picture of the topology.

One can ultimately represent multiple ConnectivityCollections (e.g., FC, IP (over FC), and IP (FC encapsulated in IP) for the same fibre channel fabric.

The minimum set of requirements for this profile is based on FC-GS-6.

4.2.4 Systems and NetworkPorts

As discussed in section 4.2.3, a Port is associated to a device to represent the link layer. A NetworkPort is associated to the ProtocolEndpoint by DeviceSAPImplementation and “joins” the System and Device model to the Network model. Instantiation of DeviceSAPImplementation, ProtocolEndpoint, and ActiveConnection is not necessary if the transceiver is not installed or the cable connecting the port to another port is not installed since the device is not capable of communicating.

Systems, or in this case ComputerSystem, represent the fabric elements that contain Ports. These are typically Hosts, Switches and Storage Systems. In Fibre Channel, these are called Platforms and Interconnect Elements. The property Dedicated in ComputerSystem allows these fabric elements to be identified. For a host, Dedicated is set to “Not Dedicated”, for a switch, Dedicated is set to “Switch”, and for a storage system, Dedicated is set to “Storage”. The Ports on a System are associated by SystemDevice.

Discovery from the viewpoint of the fabric includes the end device, but often times the information available is minimal or not available. In the case of Fibre Channel, this occurs if the platform database is not populated. If this is the case, then discovery cannot tell whether a Fibre Channel Node is contained within the same platform or not. When this occurs, ComputerSystem is not instantiated and the LogicalPortGroup representing the Node and the FCPort are associated to the AdminDomain representing the Fabric.

The instrumentation needs to respond to physical fabric changes by adding or removing Logical elements to the AdminDomain. Adding an element to the fabric is straightforward, however it is not always clear when an element has been removed. The device may have been reset, or temporarily shut down, in which case it would be an element in the fabric with an “unknown” status. The lifetime of objects that can no longer be discovered is implementation specific.

© ISO/IEC 2021 – All rights reserved

Documents
Document Sharing Hub

Full document details: BS ISO/IEC 24775-6:2021

If the instrumentation is unable to determine the type of platform discovered (defined in FC-GS-6), then the agent shall set the ComputerSystem.Dedicated property to “Unknown”.

Additional identification information about Switch ComputerSystem (e.g., DomainID) is placed in OtherIdentifyingInfo property.

EXPERIMENTAL

4.2.5 N Port Virtualization (NPIV)

Within a fabric, a host or an N Port Virtualizer can "virtualize" one or more fibre channel ports for each "physical" fibre channel port, known as NPIV. To model NPIV, Figure 7: "Fabric Instance" is extended as shown in Figure 8: "NPIV Instance" with multiple ActiveConnections to the same switch port. The association, HostedDependency, is used to associate the FCPorts representing the "physical" fibre channel port or hosting FCPort with the "virtual" fibre channel ports with the "virtual" port or dependent hosted FCPort.

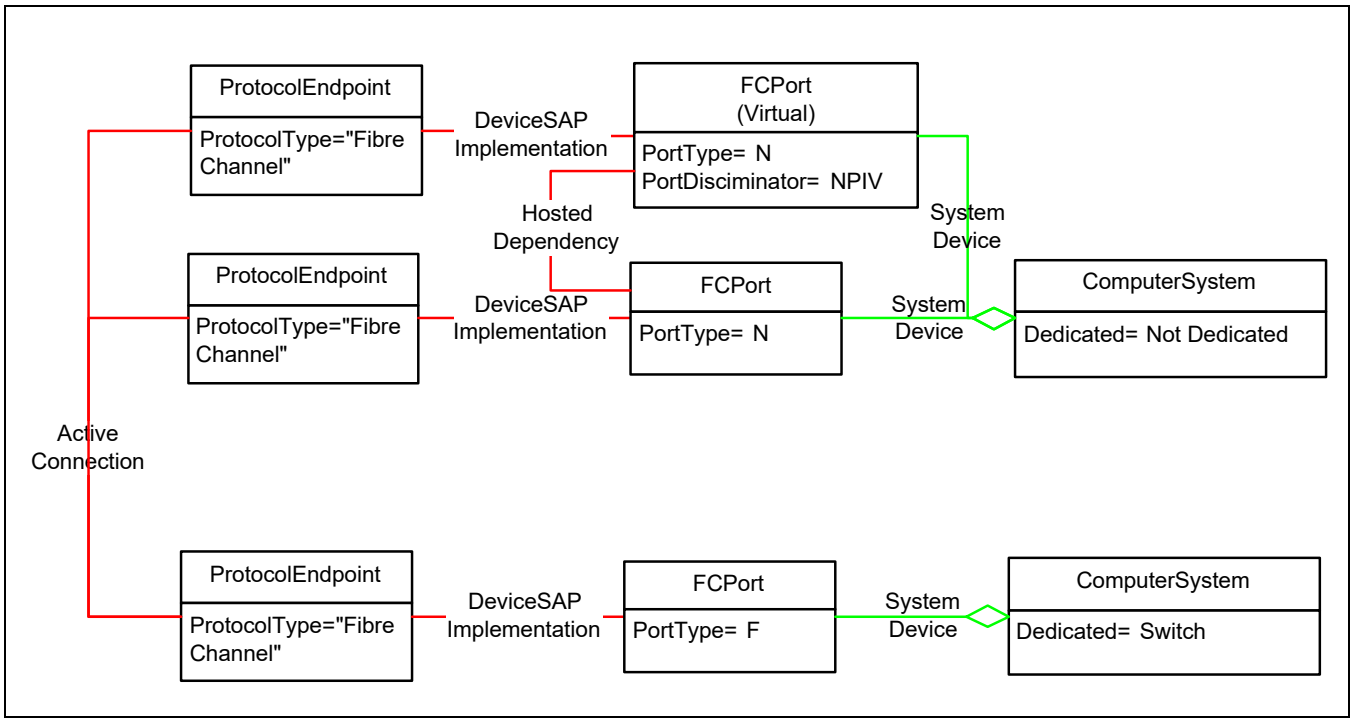

Figure 8 - NPIV Instance

EXPERIMENTAL

© ISO/IEC 2021 – All rights reserved

Documents Document Sharing Hub

Full document details: BS ISO/IEC 24775-6:2021

4.2.6 Zoning

4.2.6.1 Basic Model for Zoning

Figure 9 illustrates the basic model for zoning

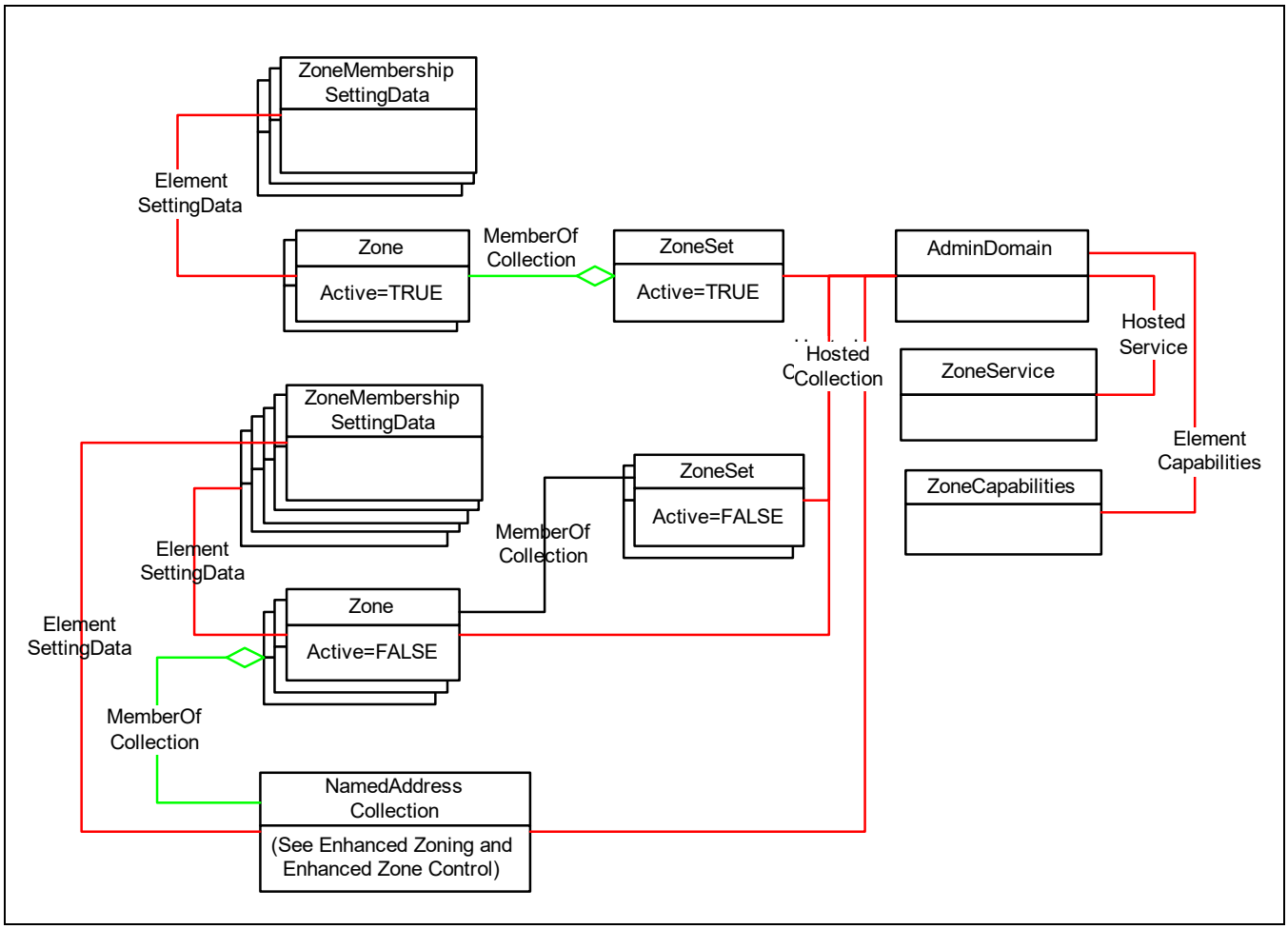

Figure 9 - Zoning Instance (AdminDomain)

EXPERIMENTAL

The zoning model is based on FC-GS-7.

EXPERIMENTAL

This model represents the management model for defining Zone Sets, Zones, and Zone Members and "activation" of a Zone Set for a fabric. In the following discussion it may be helpful to also define the following:

- **Active ZoneSet**: the Zone Set currently enforced by the Fabric.
- **Zone Set Database**: The database of the Zone Sets not enforced by the Fabric. Referred to in this document as the Inactive Zone Sets.

© ISO/IEC 2021 – All rights reserved

Documents
Document Sharing Hub

Full document details: BS ISO/IEC 24775-6:2021

- **Zoning Definitions**: a generic term used to indicate both the above concepts.

The zoning model refers to a Zone Set as ZoneSet, a Zone as Zone, ZoneAlias as a NamedAddressCollection, and Zone Member as ZoneMembershipSettingData. ZoneSets shall only contain Zones associated by MemberOfCollection. Zones shall only contain ZoneMembershipSettingData associated by ElementSettingData (except for peer zones, see 4.2.6.2 Peer Zoning for more information) or NamedAddressCollections associated by MemberOfCollection. For more information with regards to NamedAddressCollection, see 5 Enhanced Zoning and Enhanced Zone Control Profile.

The class ZoneMembershipSettingData has two properties that indicate how the device was identified to be "zoned". They are ConnectivityMemberType (e.g., PermanentAddress for WWN, NetworkAddress for FCID, etc.) and ConnectivityMemberID which contains the actual device identifier.

The Active Zone Set, defined by an instance of ZoneSet with the Active property set to TRUE, shall only be hosted on the AdminDomain representing the Fabric. The Inactive Zone Sets, defined by an instance of ZoneSet with the Active property set to FALSE, shall be hosted on either the AdminDomain representing the Fabric as shown in Figure 9: "Zoning Instance (AdminDomain)" or the ComputerSystem representing the switch as shown in Figure 10: "Zoning Instance (ComputerSystem)". It is allowed to have no ZoneSets (active or inactive), only an active ZoneSet, only an inactive ZoneSet(s), or both an inactive ZoneSet(s) and an active ZoneSet.

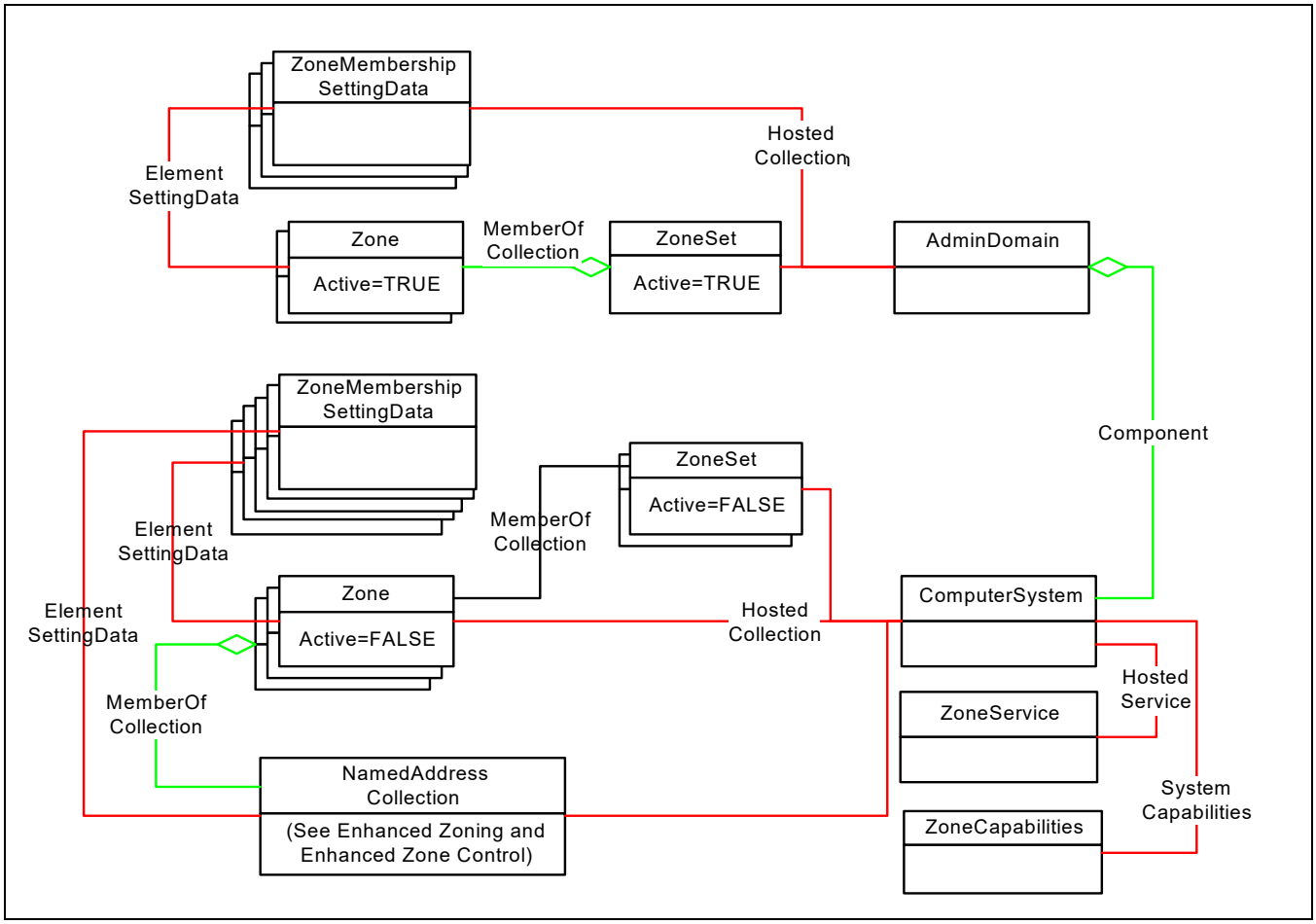

Figure 10 - Zoning Instance (ComputerSystem)

The ZoneService and ZoneCapabilities are also associated to the same System (AdminDomain or ComputerSystem) as the Inactive Zone Sets using the association HostedService or ElementCapabilities, respectively.

© ISO/IEC 2021 – All rights reserved

Documents Document Sharing Hub

Full document details: BS ISO/IEC 24775-6:2021

ZoneService provides the configuration methods to control create ZoneSets, Zones, Zone Aliases, and Zone Members, as well as activation of the Zone Set. This service and its methods are described in the 5 Enhanced Zoning and Enhanced Zone Control Profile.

EXPERIMENTAL

4.2.6.2 Peer Zoning

For peer zones, there are zone members identified as either a principal member or peer member. The semantics of a peer zone is that peer members are allowed to communicate with the principal member; and Peer members are not allowed to communicate among themselves (unless allowed by other Zones in the Zone Set). The addition in the model to for peer zones is that ZoneMembershipSettingData is associated to the Zone with the association ZoneSettingData which has an addition property, ZoneMembershipRole, to identify whether the member is a principal or peer.

Traditionally, SAN zoning has been wholly owned and controlled by switches in the fabric and administered through a management interface (e.g. SMI). There is an additional mechanism where a target can, in band, create peer zones, commit, and enable them in the fabric. For the purposes of this document, these peer zones will be called peer target zones. Otherwise (those create through a management interface), will be call peer user zones. The property ZoneType in the class Zone is used to identify the mechanism it was created with.

Figure 11 illustrates peer zoning.

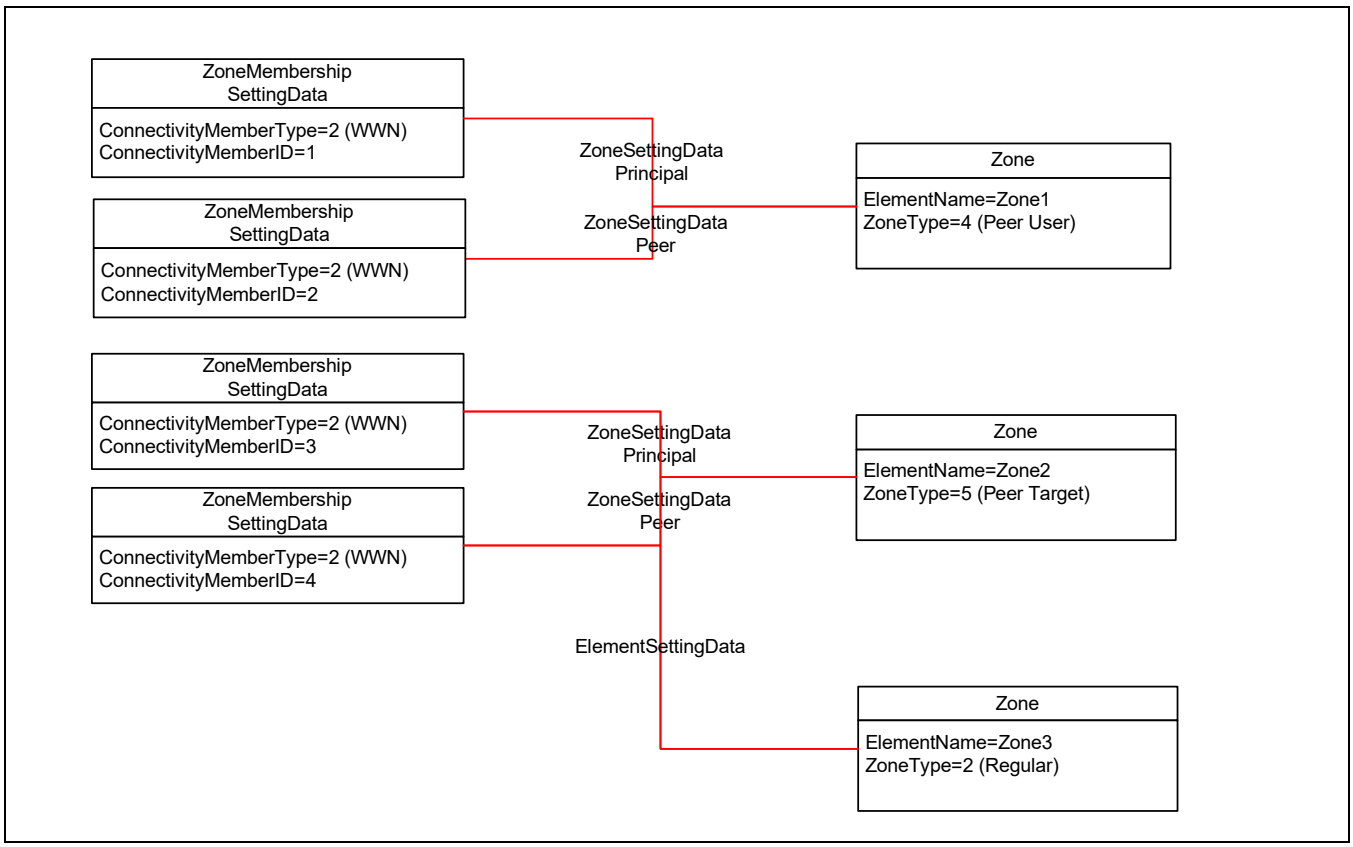

Figure 11 - Zoning Instance (Peer Zoning)

EXPERIMENTAL

© ISO/IEC 2021 – All rights reserved

Documents
Document Sharing Hub

Full document details: BS ISO/IEC 24775-6:2021

EXPERIMENTAL

4.2.7 Conditional Classes and Properties

Table 4 contains some classes which are conditional on implementation of other profiles in the Fabric Book:

- CIM_ComputerSystem (Partitioned Switch) is conditional on the implementation of the Virtual Fabrics component profile
- CIM_FCPort (Partitioned Switch FCPort) is conditional on the implementation of the Switch Partitioning component profile

In addition, some of the mandatory classes of the Fabric Profile include properties that are conditional on the implementation of other profiles in the Fabric book.

- Some properties in CIM_ComputerSystem (Switch) are conditional on the implementation of the Switch Profile.
- Some properties in CIM_FCPort (Switch FCPort) are conditional on the implementation of the Switch Profile

EXPERIMENTAL

4.3 Health and Fault Management

The following classes report possible Health and Fault information through LifeCycle indications:

- ComputerSystem,
- FCPort

These LifeCycle indications are more fully described in Table 4, “CIM Elements for Fabric,”.

Also in Table 4, “CIM Elements for Fabric,” is a list of AlertIndications which may also be indicators for Health and Fault Management.

4.4 Cascading Considerations

Not defined in this document

4.5 Methods of this Profile

4.5.1 Extrinsic Methods of the Profile

All of the Fabric Profile extrinsic methods return one of the following status codes. Depending on the error condition, a method may return additional error codes and/or throw an appropriate exception to indicate the error encountered.

0: Success

1: Not Supported

2: Unspecified Error

3: Timeout

4: Failed

5:Invalid Parameter

© ISO/IEC 2021 – All rights reserved

Documents Document Sharing Hub

Full document details: BS ISO/IEC 24775-6:2021

6: Access_Denied

7: Not_Found (not applicable for SessionControl)

8: Already_Exists (Not applicable for ActivateZoneSet and SessionControl)

9: Insufficient_Resources

4.5.2 CreateZoneSet

This method creates a ZoneSet and the association HostedCollection. The newly created association, HostedCollection, associates the Zone to the same AdminDomain (Fabric) that the ZoneService is hosted to. For the newly created ZoneSet, the Active property is always set to false.

```
CreateZoneSet(
         [Required, IN, Description (
             "A user-friendly name for the ZoneSet that is "
             "unique within the AdminDomain." ),
          ModelCorrespondence { "CIM_ZoneSet.ElementName" }]
      string ZoneSetName,
         [IN, OUT, Description (
             "A reference to the newly created Zone." )]
      CIM_ZoneSet REF ZoneSet);
```

4.5.3 CreateZone

This method creates a Zone and the association HostedCollection. The newly created association, HostedCollection, associates the Zone to the same AdminDomain (Fabric) that the ZoneService is hosted to. For the newly created Zone, the Active property is always set to false.

```
CreateZone(
      [Required, IN, Description (
          "A user-friendly name for the Zone that is unique "
          "within the AdminDomain." ),
       ModelCorrespondence { "CIM_Zone.ElementName" }]
   string ZoneName,
      [IN, Description ( "The type of zoning to be enforced." ),
       ValueMap { "2", "3" },
       Values { "Default", "Protocol" },
       ModelCorrespondence { "CIM_Zone.ZoneType" }]
   uint16 ZoneType,
      [IN, Description (
          "Specific clarification to be used when the "
          "ZoneType has an enumeration that requires it. "
          "Specifically, if ZoneType is \"Protocol\", then "
          "SubType is the Fibre Channel FC4 type." ),
       ValueMap { "2", "3", "4" },
       Values { "SCSI", "VI", "IP" },
       ModelCorrespondence { "CIM_Zone.ZoneSubType" }]
   uint16 ZoneSubType,
      [IN, OUT, Description (
          "A reference to the newly created Zone." )]
   CIM_Zone REF Zone)
```


© ISO/IEC 2021 – All rights reserved

Documents
Document Sharing Hub

Full document details: BS ISO/IEC 24775-6:2021

4.5.4 CreateZoneAlias

This method creates a ZoneAlias and the association HostedCollection. The newly created association, HostedCollection, associates the ZoneAlias to the same AdminDomain (Fabric) that the ZoneService is hosted to. For the newly created ZoneAlias, the Active property is always set to false.

```
CreateZoneAlias(
      [Required, IN, Description (
          "A name (alias) for the ZoneAlias that is unique in "
          "the context of the hosting System." ),
       ModelCorrespondence { "CIM_ZoneAlias.CollectionAlias" }]
   string CollectionAlias,
      [IN, OUT, Description (
          "A reference to the newly created ZoneAlias." )]
   CIM_NamedAddressCollection REF ZoneAlias);
```

4.5.5 CreateZoneMembershipSettingData

This method creates a ZoneMembershipSettingData instance and adds it to the specified Zone or ZoneAlias by creating a MemberOfCollection association.

```
CreateZoneMembershipSettingData(
      [Required, IN, Description (
          "Identifies the type of identification placed in "
          "ConnectivityMemberID." ),
       ValueMap { "0", "1", "2", "3", "4", "5", "..",
          "0x8000.." },
       Values { "Unknown", "Other", "PermanentAddress",
          "NetworkAddress", "SwitchPortID",
          "LogicalPortGroup", "DMTF_Reserved",
          "Vendor_Reserved" },
       ModelCorrespondence {
          "CIM_ZoneMembershipSettingData.ZoneMemberType" }]
   uint16 ConnectivityMemberType,
      [Required, IN, Description (
          "This property specifies the type of identification "
          "used in the ConnectivityMemberID field. For Fibre "
          "Channel: \n"
          "* A ConnectivityMemberType of \'PermanentAddress\', "
          "the ConnectivityMemberID is the NxPort WWN; \n"
          "* A ConnectivityMemberType of \'NetworkAddress\', "
          "the ConnectivityMemberID is the NXPort Address ID; \n"
          "* A ConnectivityMemberType of \'SwitchPortID\', "
          "the ConnectivityMemberID is \'Domain:PortNumber\'." ),
       ModelCorrespondence {
          "CIM_ZoneMembershipSettingData.ConnectivityMemberID" }]
   string ConnectivityMemberID,
      [Required, IN, Description (
          "The collection that the ZoneMembershipSettingData "
          "should be added to. The collection is either a "
```


© ISO/IEC 2021 – All rights reserved

Documents Document Sharing Hub

Full document details: BS ISO/IEC 24775-6:2021

```
            "Zone or ZoneAlias." )]
      CIM_SystemSpecificCollection REF SystemSpecificCollection,
         [IN, OUT, Description (
            "A reference to the newly created ZoneMembershipSettingData."
             )]
      CIM_ZoneMembershipSettingData REF ZoneMembershipSettingData)
```

4.5.6 AddZone

This method adds to the specified ZoneSet the specified Zone. Adding a Zone to a ZoneSet, extends the zone enforcement definition of the ZoneSet to include the members of that Zone. If adding the Zone is successful, the Zone should be associated with the ZoneSet by MemberOfCollection.

```
AddZone(
      [Required, IN, Description (
            "A reference to the ZoneSet that the Zone is added to."
             )]
      CIM_ZoneSet REF ZoneSet,
         [IN, Description (
            "A reference to the Zone that is to be added to the ZoneSet."
             )]
      CIM_Zone REF Zone)
```

4.5.7 AddZoneMembershipSettingData

This method adds to the specified Zone or ZoneAlias, the specified ZoneMembershipSettingData. If adding the ZoneMembershipSettingData is successful, an ElementSettingData association will be created between the ZoneMembershipSettingData and either the Zone or ZoneAlias.

```
AddZoneMembershipSettingData(
      [Required, IN, Description (
            "A reference to the Zone or ZoneAlias that the "
            "ZoneMembershipSettingData is to be added to." )]
      CIM_SystemSpecificCollection REF SystemSpecificCollection,
         [IN, Description (
            "A reference to the ZoneMembershipSettingData that "
            "is to be added to the Zone or ZoneAlias." )]
      CIM_ZoneMembershipSettingData REF ZoneMembershipSettingData)
```

4.5.8 AddZoneAlias

This method adds to the specified Zone the specified NamedAddressCollection (ZoneAlias). If adding the NamedAddressCollection (ZoneAlias) is successful, an ElementSettingData association will be created between the NamedAddressCollection and either the Zone or ZoneAlias.

```
AddZoneAlias(
      [Required, IN, Description (
            "A reference to the Zone that the ZoneAlias is to be added to."
             )]
      CIM_Zone REF Zone,
         [IN, Description (
            "A reference to the ZoneAlias that is to be added to the Zone."
             )]
```


© ISO/IEC 2021 – All rights reserved

Documents
Document Sharing Hub

Full document details: BS ISO/IEC 24775-6:2021

```
            CIM_NamedAddressCollection REF ZoneAlias)
```

4.5.9 ActivateZoneSet

This method activates the specified ZoneSet. After the ZoneSet is activated, the ZoneSet, associated Zone, NamedAddressCollection (ZoneAliases), and ZoneMembershipSettingData instances will have the active flag set to true.

```
         ActivateZoneSet(
               [Required, IN, Description (
                   "A reference to the ZoneSet to be activated." )]
            CIM_ZoneSet REF ZoneSet,
               [Required, IN, Description (
                   "Activate indicates whether the references to "
                   "ZoneSet should be activated (Active=true) or "
                   "deactivated (Active=false)." )]
            boolean Activate)
```

4.5.10 SessionControl

This method requests that a session start (value=2), end (value=3), or terminate (value=4). SessionControl is used in zoning to group a set of zoning tasks (CreateZoneSet, CreateZone, CreateZoneAlias, CreateZoneMembershipSettingData, AddZone, AddZoneMemberSettingData, AddZoneAlias) together as a transaction (start) and when completed (end) to be applied (end) or can be dropped (terminated).

```
uint32 SessionControl(
      [IN, Description (
          "RequestedSessionState is an integer enumeration "
          "that indicates whether the ZoneService session has "
          "been requested to start (value=2), end (value=3), "
          "or terminate (value=4)." ),
       ValueMap { "2", "3", "4" },
       Values { "Start", "End", "Terminate" },
       ModelCorrespondence {
          "CIM_ZoneService.RequestedSessionState" }]
   uint16 RequestedSessionState)
```

4.6 Use Cases

4.6.1 Fabric Identifier

The client needs to consider that the fabric identifier is not durable but is correlatable and may change over time. See *Storage Management Technical Specification, Part 2 Common Architecture, 1.8.0 Rev 4* 7 Correlatable and Durable Names.

© ISO/IEC 2021 – All rights reserved

Documents Document Sharing Hub

Full document details: BS ISO/IEC 24775-6:2021

4.6.2 FCPort OperationalStatus

OperationalStatus is the property to indicate status and state for the FCPort (both Platform and Switch ports). The FCPort instance has one of the following Operational Statuses.

Table 2 - Port OperationalStatus

OperationalStatus	Description
OK	Port is online
Error	Port has a failure
Stopped	Port is disabled
InService	Port is in Self Test
Unknown	

4.6.3 Switch ComputerSystem OperationalStatus

OperationalStatus is the property to indicate status and state for switch ComputerSystems. The switch ComputerSystem instance has one of the following Operational Statuses and possibly one of the Subsidiary statuses.

Table 3 - OperationalStatus for ComputerSystem

Operational Status	Possible Subsidiary Operational Status	Description
OK		The system has a good status
OK	Stressed	The system is stressed, for example the temperature is over limit or there is too much IO in progress
OK	Predictive Failure	The system will probably will fail sometime soon
Degraded		The system is operational but not at 100% redundancy. A component has suffered a failure or something is running slow
Error		An error has occurred causing the system to stop. This error may be recoverable with operator intervention.
Error	Non-recoverable error	A severe error has occurred. Operator intervention is unlikely to fix it
Error	Supporting entity in error	A modeled element has failed
InService		Switch is in Self Test.
No contact		The provider knows about the array but has not talked to it since last reboot
Lost communication		The provider used to be able to communicate with the array, but has now lost contact.
Starting		The system is starting up
Stopping		The system is shutting down.
Stopped		The data path is OK but shut down, the management channel is still working.

© ISO/IEC 2021 – All rights reserved

Documents
Document Sharing Hub

Full document details: BS ISO/IEC 24775-6:2021

Peer Zoning

4.7 CIM Elements

4.7.1 Overview

Table 4 describes the CIM elements for Fabric.

Table 4 - CIM Elements for Fabric

Element Name	Requirement	Description
4.7.2 CIM_ActiveConnection	Mandatory	The association between ProtocolEndpoints representing the links between devices.
4.7.3 CIM_AdminDomain (Fabric)	Mandatory	AdminDomain representing the Fabric. Associated to RegisteredProfile.
4.7.4 CIM_AdminDomain (SAN)	Mandatory	AdminDomain representing the SAN.
4.7.5 CIM_Component (Platform to Fabric)	Optional	Aggregates Hosts and Arrays (Platforms) in the AdminDomain that represents the Fabric.
4.7.6 CIM_Component (Switch to Fabric)	Mandatory	Aggregates Switches in the AdminDomain that represents the Fabric.
4.7.7 CIM_ComputerSystem (Host Platform)	Mandatory	The ComputerSystem representing the Host Platform.
4.7.8 CIM_ComputerSystem (Partitioned Switch)	Conditional	Conditional requirement: Required if the Virtual Fabrics profile is implemented. The ComputerSystem representing a Partitioned Switch.
4.7.9 CIM_ComputerSystem (Storage Platform)	Mandatory	The ComputerSystem representing the Storage Platform (e.g.an Array).
4.7.10 CIM_ComputerSystem (Switch)	Mandatory	The ComputerSystem representing the Switch.
4.7.11 CIM_ConnectivityCollection	Mandatory	Collects the ProtocolEndpoints of the fabric.
4.7.12 CIM_ContainedDomain	Mandatory	Associates a Fabric to a SAN.
4.7.13 CIM_DeviceSAPImplementation (Non-Switch to FCPort)	Mandatory	Associates the Non-Switch (Host or Storage) FCPort to the ProtocolEndpoint.
4.7.14 CIM_DeviceSAPImplementation (Switch to FCPort)	Mandatory	Associates the Switch FCPort to the ProtocolEndpoint.
4.7.15 CIM_ElementCapabilities (ZoneCapabilities to Fabric.)	Mandatory	Associates ZoneCapabilities to a Fabric.
4.7.16 CIM_ElementCapabilities (ZoneCapabilities to Switch.)	Mandatory	Associates ZoneCapabilities to a switch system.
4.7.17 CIM_ElementSettingData (ZoneMembershipSettingData to Zone)	Mandatory	Associates ZoneMembershipSettingData to the Zone.
4.7.18 CIM_FCActiveConnection	Optional	Experimental. The association between ProtocolEndpoints representing the links between fibre channel devices (including ISLs).
4.7.19 CIM_FCPort (Host FCPort)	Mandatory	Fibre Channel Port for Host Platforms.
4.7.20 CIM_FCPort (Host NPIV FCPort)	Optional	Experimental. A Host NPIV Fibre Channel Port for Host Platforms.
4.7.21 CIM_FCPort (Partitioned Switch FCPort)	Conditional	Conditional requirement: Support for the Switch Partitioning profile. Fibre Channel Port for Partitioned Switch.
4.7.22 CIM_FCPort (Storage FCPort)	Mandatory	Fibre Channel Port for Devices (Storage Platforms).
4.7.23 CIM_FCPort (Switch FCPort)	Mandatory	Fibre Channel Port for Switch.

© ISO/IEC 2021 – All rights reserved

Documents Document Sharing Hub

Full document details: BS ISO/IEC 24775-6:2021

Table 4 - CIM Elements for Fabric

Element Name	Requirement	Description
4.7.24 CIM_HostedAccessPoint (AdminDomain to ProtocolEndpoint)	Optional	Associates the ProtocolEndpoint to a Fabric AdminDomain.
4.7.25 CIM_HostedAccessPoint (ComputerSystem to ProtocolEndpoint)	Mandatory	Associates the ProtocolEndpoint to the hosting ComputerSystem.
4.7.26 CIM_HostedCollection (Fabric to ConnectivityCollection)	Mandatory	Associates the ConnectivityCollection to the AdminDomain representing the Fabric.
4.7.27 CIM_HostedCollection (System to LogicalPortGroup)	Mandatory	Associates the LogicalPortGroup to the ComputerSystem representing the platform (host or array) or the Fabric (if platforms are not implemented).
4.7.28 CIM_HostedCollection (Zones or ZoneSets to Fabric)	Mandatory	Associates the ZoneSets and Zones to the AdminDomain representing the Fabric.
4.7.29 CIM_HostedCollection (Zones or ZoneSets to Switch)	Mandatory	Associates the ZoneSets and Zones to the hosting System (the ComputerSystem representing the switch).
4.7.30 CIM_HostedDependency	Optional	Experimental. The association representing the relationship of the FCPort that hosts the FCPorts that are virtualized.
4.7.31 CIM_LogicalPortGroup	Mandatory	Fibre Channel Node.
4.7.32 CIM_MemberOfCollection (ConnectivityCollection to ProtocolEndpoint)	Mandatory	Associates ConnectivityCollection to ProtocolEndpoint.
4.7.33 CIM_MemberOfCollection (LogicalPortGroup to FCPort)	Mandatory	Associates a LogicalPortGroup to its platform FC Ports.
4.7.34 CIM_MemberOfCollection (ZoneSet to Zone)	Mandatory	Associates a ZoneSet to its Zones.
4.7.35 CIM_ProtocolEndpoint	Mandatory	The endpoint of a link (ActiveConnection).
4.7.36 CIM_SystemDevice (Non-Switch FCPort to Fabric)	Optional	Associates non-Switch FCPorts to the System (Fabric).
4.7.37 CIM_SystemDevice (Non-Switch FCPort to Platform)	Optional	Associates non-Switch FCPorts to the ComputerSystem (Platform).
4.7.38 CIM_SystemDevice (Switch FCPort to Switch)	Mandatory	Associates Switch FCPorts to the ComputerSystem (Switch).
4.7.39 CIM_Zone (Active)	Mandatory	The active Zones being enforced by the Fabric.
4.7.40 CIM_Zone (Inactive)	Mandatory	The inactive Zones being enforced by the Fabric.
4.7.41 CIM_ZoneCapabilities	Mandatory	The Zoning Capabilities of the associated Fabric (or Switch).
4.7.42 CIM_ZoneMembershipSettingData	Mandatory	Defines the zone member.
4.7.43 CIM_ZoneSet (Active)	Mandatory	The active ZoneSets being enforced by the Fabric.
4.7.44 CIM_ZoneSet (Inactive)	Mandatory	The inactive ZoneSet.
4.7.45 CIM_ZoneSettingData (ZoneMembershipSettingData to Zone)	Conditional	Experimental. Conditional requirement: Required if the CIM_ZoneCapabilities.PeerZoningSupported='4' (Peer User) or '5' (Peer Target).Associates ZoneMembershipSettingData to the Zone with the peer zone role.
SELECT * FROM CIM_InstCreation WHERE SourceInstance ISA CIM_ComputerSystem	Mandatory	Creation of a ComputerSystem instance..
SELECT * FROM CIM_InstDeletion WHERE SourceInstance ISA CIM_ComputerSystem	Mandatory	Deletion of a ComputerSystem instance.

© ISO/IEC 2021 – All rights reserved

Documents
Document Sharing Hub

Full document details: BS ISO/IEC 24775-6:2021

Peer Zoning

Table 4 - CIM Elements for Fabric

Element Name	Requirement	Description
SELECT * FROM CIM_InstCreation WHERE SourceInstance ISA CIM_FCPort	Mandatory	Creation of a FC Port instance.
SELECT * FROM CIM_InstDeletion WHERE SourceInstance ISA CIM_FCPort	Mandatory	Deletion of a FC Port instance.
SELECT * FROM CIM_InstModification WHERE SourceInstance ISA CIM_FCPort AND SourceInstance.CIM_FCPort::OperationalStatus <> PreviousInstance.CIM_FCPort::OperationalStatus	Mandatory	CQL -Modification of OperationalStatus of a FC Port instance.
SELECT * FROM CIM_InstModification WHERE SourceInstance ISA CIM_ComputerSystem AND SourceInstance.CIM_ComputerSystem::OperationalStatus <> PreviousInstance.CIM_ComputerSystem::Operationalstatus	Mandatory	CQL -Modification of OperationalStatus of a ComputerSystem instance.
SELECT * FROM CIM_AlertIndication WHERE OwningEntity='SNIA' and MessageID='FC1'	Mandatory	CQL -Modification of Zone Database.
SELECT * FROM CIM_AlertIndication WHERE OwningEntity='SNIA' and MessageID='FC2'	Mandatory	CQL -ZoneSet Activated.
SELECT * FROM CIM_AlertIndication WHERE OwningEntity='SNIA' and MessageID='FC5'	Mandatory	Experimental. Switch Status Changed.
SELECT * FROM CIM_AlertIndication WHERE OwningEntity='SNIA' and MessageID='FC6'	Mandatory	Experimental. Fabric Merge/Segmentation.
SELECT * FROM CIM_AlertIndication WHERE OwningEntity='SNIA' and MessageID='FC7'	Mandatory	Experimental. Switch Added/Removed.
SELECT * FROM CIM_AlertIndication WHERE OwningEntity='SNIA' and MessageID='FC8'	Mandatory	Experimental. Fabric Added/Removed.

4.7.2 CIM_ActiveConnection

The association between ProtocolEndpoints representing the links between devices (including ISLs). For loops, multiple ActiveConnections are instantiated as one to many relationships.

Created By: Static

Modified By: Static

Deleted By: Static

Requirement: Mandatory

Table 5 describes class CIM_ActiveConnection.

Table 5 - SMI Referenced Properties/Methods for CIM_ActiveConnection

Properties	Flags	Requirement	Description & Notes
Antecedent		Mandatory	The reference to the ProtocolEndpoint for one end of the link.
Dependent		Mandatory	The reference to the ProtocolEndpoint for the other end of the link.

4.7.3 CIM_AdminDomain (Fabric)

AdminDomain representing the fabric. This is a logical entity and can represent virtual fabrics.

© ISO/IEC 2021 – All rights reserved

Documents Document Sharing Hub

Full document details: BS ISO/IEC 24775-6:2021

Note that if the Virtual Fabrics Profile is implemented, OtherIndentifyInfo shall contain a Virtual Fabric ID with a 'SNIA:VF_ID' in the corresponding index of IdentifyingDescriptions.

Created By: Static
Modified By: Static
Deleted By: Static
Requirement: Mandatory

Shall be associated to RegisteredProfile using ElementConformsToProfile association. The RegisteredProfile instance shall have RegisteredName set to 'Fabric', RegisteredOrganization set to 'SNIA', and RegisteredVersion set to '1.8.0'.

Table 6 describes class CIM_AdminDomain (Fabric).

Table 6 - SMI Referenced Properties/Methods for CIM_AdminDomain (Fabric)

Properties	Flags	Requirement	Description & Notes
CreationClassName		Mandatory	Name of Class.
Name	C	Mandatory	WWN of Fabric.
NameFormat		Mandatory	Shall be 'WWN'.
ElementName		Optional	A user friendly name for the Fabric (implementation dependent).
OtherIdentifyingInfo		Mandatory	For a Fabric AdminDomain this property shall contain the value 'Fabric'. For Virtual Fabrics, one of the indices shall contain the value of the Virtual Fabric ID and in the corresponding index for OtherIdentifyingDescription the value 'SNIA:VF_ID'.
IdentifyingDescriptions		Mandatory	For a Fabric AdminDomain this property shall contain the value 'SNIA:DetailedType' in the index for the OtherIdentifyingInfo of 'Fabric'. For Virtual Fabrics, One of the indices shall contain the value 'SNIA:VF_ID' and in the corresponding index for OtherIdentifyingInfo the value of the Virtual Fabric ID.

4.7.4 CIM_AdminDomain (SAN)

AdminDomain representing the SAN.

Created By: Static
Modified By: Static
Deleted By: Static
Requirement: Mandatory

Table 7 describes class CIM_AdminDomain (SAN).

Table 7 - SMI Referenced Properties/Methods for CIM_AdminDomain (SAN)

Properties	Flags	Requirement	Description & Notes
CreationClassName		Mandatory	Name of Class.
Name		Mandatory	An arbitrary name (implementation dependent).
NameFormat		Mandatory	Dependent on the arbitrary name chosen.

© ISO/IEC 2021 – All rights reserved

Documents
Document Sharing Hub

Full document details: BS ISO/IEC 24775-6:2021

Table 7 - SMI Referenced Properties/Methods for CIM_AdminDomain (SAN)

Properties	Flags	Requirement	Description & Notes
ElementName		Optional	A user friendly name for the SAN (implementation dependent).
OtherIdentifyingInfo		Mandatory	For a SAN AdminDomain this property shall contain the value 'SAN'.
IdentifyingDescriptions		Mandatory	For a SAN AdminDomain this property shall contain the value 'SNIA:DetailedType' in the index for the OtherIdentifyingInfo of 'SAN'.

4.7.5 CIM_Component (Platform to Fabric)

Aggregates Hosts and Arrays (Platforms) in the AdminDomain that represents the Fabric.

Created By: Static
Modified By: Static
Deleted By: Static
Requirement: Optional

Table 8 describes class CIM_Component (Platform to Fabric).

Table 8 - SMI Referenced Properties/Methods for CIM_Component (Platform to Fabric)

Properties	Flags	Requirement	Description & Notes
PartComponent		Mandatory	Reference to a Storage Platform or Host Platform ComputerSystem.
GroupComponent		Mandatory	Reference to the AdminDomain representing the Fabric (OtherIdentifyingInfo contains 'Fabric' with a corresponding 'SNIA:DetailedType' in IdentifyingDescriptions').

4.7.6 CIM_Component (Switch to Fabric)

Aggregates Switches in the AdminDomain that represents the Fabric.

Created By: Static
Modified By: Static
Deleted By: Static
Requirement: Mandatory

Table 9 describes class CIM_Component (Switch to Fabric).

Table 9 - SMI Referenced Properties/Methods for CIM_Component (Switch to Fabric)

Properties	Flags	Requirement	Description & Notes
PartComponent		Mandatory	Reference to Switch (a ComputerSystem with Dedicated='5').
GroupComponent		Mandatory	Reference to the AdminDomain representing the Fabric (OtherIdentifyingInfo contains 'Fabric' with a corresponding 'SNIA:DetailedType' in IdentifyingDescriptions').

4.7.7 CIM_ComputerSystem (Host Platform)

The ComputerSystem representing the Host Platform. This class is typically instantiated if the end device has populated the Fibre Channel Platform Database or FDMI.

© ISO/IEC 2021 – All rights reserved

Documents Document Sharing Hub

Full document details: BS ISO/IEC 24775-6:2021