BS ISO/IEC 24789-2:2024

BSI Standards Publication

Identification cards — Card service life

Part 2: Methods of evaluation

Documents
Document Sharing Hub

Full document details: BS ISO/IEC 24789-2:2024

National foreword

This British Standard is the UK implementation of ISO/IEC 24789-2:2024. It supersedes BS ISO/IEC 24789-2:2011, which is withdrawn.

The UK participation in its preparation was entrusted to Technical Committee IST/17, Cards and security devices for personal identification.

A list of organizations represented on this committee can be obtained on request to its committee manager.

Contractual and legal considerations

This publication has been prepared in good faith, however no representation, warranty, assurance or undertaking (express or implied) is or will be made, and no responsibility or liability is or will be accepted by BSI in relation to the adequacy, accuracy, completeness or reasonableness of this publication. All and any such responsibility and liability is expressly disclaimed to the full extent permitted by the law.

This publication is provided as is, and is to be used at the recipient's own risk.

The recipient is advised to consider seeking professional guidance with respect to its use of this publication.

This publication is not intended to constitute a contract. Users are responsible for its correct application.

© The British Standards Institution 2024
Published by BSI Standards Limited 2024

ISBN 978 0 539 15782 6

ICS 35.240.15

Compliance with a British Standard cannot confer immunity from legal obligations.

This British Standard was published under the authority of the Standards Policy and Strategy Committee on 31 January 2024.

Amendments/corrigenda issued since publication

Date	Text affected

Documents
Document Sharing Hub

Full document details: BS ISO/IEC 24789-2:2024

International Standard

ISO/IEC 24789-2

Second edition
2024-01

Identification cards — Card service life —

Part 2: Methods of evaluation

Cartes d'identification — Durée de vie des cartes —

Partie 2: Méthodes d'évaluation

Reference number
ISO/IEC 24789-2:2024(en)

© ISO/IEC 2024

Documents
Document Sharing Hub

Full document details: BS ISO/IEC 24789-2:2024

COPYRIGHT PROTECTED DOCUMENT

© ISO/IEC 2024

All rights reserved. Unless otherwise specified, or required in the context of its implementation, no part of this publication may be reproduced or utilized otherwise in any form or by any means, electronic or mechanical, including photocopying, or posting on the internet or an intranet, without prior written permission. Permission can be requested from either ISO at the address below or ISO's member body in the country of the requester.

ISO copyright office
CP 401 • Ch. de Blandonnet 8
CH-1214 Vernier, Geneva
Phone: +41 22 749 01 11
Email: copyright@iso.org
Website: www.iso.org

Published in Switzerland

© ISO/IEC 2024 – All rights reserved

Documents
Document Sharing Hub

Full document details: BS ISO/IEC 24789-2:2024

Contents

Page

Foreword ..... **v**
Introduction ..... **vi**
1 Scope **1**
2 Normative references **1**
3 Terms and definitions **2**
3.1 Terms and definitions 2
3.2 Abbreviated terms 2
4 Default items applicable to the evaluation methods **2**
4.1 Test environment 2
4.2 Pre-conditioning 2
4.3 Default tolerance 3
4.4 Total measurement uncertainty 3
5 Test methods **3**
5.1 Surface abrasion 3
5.1.1 General 3
5.1.2 Apparatus 3
5.1.3 Procedure 3
5.1.4 Test report 5
5.2 Magnetic stripe abrasion 5
5.2.1 General 5
5.2.2 Apparatus 6
5.2.3 Procedure 6
5.2.4 Test report 7
5.3 Adhesion of ICM to card — Wrapping test 7
5.3.1 General 7
5.3.2 Apparatus 7
5.3.3 Procedure 8
5.3.4 Test report 9
5.4 Adhesion of ICM to card — Push test 9
5.4.1 General 9
5.4.2 Apparatus 9
5.4.3 Procedure 10
5.4.4 Test report 11
5.5 Adhesion of ICM to card — Pull test 11
5.5.1 General 11
5.5.2 Apparatus 11
5.5.3 Procedure 11
5.5.4 Test report 12
5.6 Plasticised vinyl storage 12
5.6.1 General 12
5.6.2 Apparatus 12
5.6.3 Procedure 13
5.6.4 Test report 13
5.7 Temperature and humidity aging 14
5.7.1 General 14
5.7.2 Apparatus 14
5.7.3 Procedure 14
5.7.4 Test report 14
5.8 Temperature and exposure with humidity variation 14
5.8.1 General 14
5.8.2 Apparatus 14
5.8.3 Procedure 14
5.8.4 Test report 15

© ISO/IEC 2024 – All rights reserved

AVA Documents
Document Sharing Hub

Full document details: BS ISO/IEC 24789-2:2024

5.9 ID-1 card flexure ... 15
5.9.1 General ... 15
5.9.2 Apparatus ... 15
5.9.3 Procedure ... 15
5.9.4 Test report ... 15
5.10 Cross cut tape test ... 16
5.10.1 General ... 16
5.10.2 Apparatus ... 16
5.10.3 Procedure ... 16
5.10.4 Test report ... 18
5.11 Additional test methods regarding mechanical strength ... 18
Annex A (informative) **Additional tests** ... **19**
Bibliography ... **36**

© ISO/IEC 2024 – All rights reserved

Documents
Document Sharing Hub
Full document details: BS ISO/IEC 24789-2:2024

Foreword

ISO (the International Organization for Standardization) and IEC (the International Electrotechnical Commission) form the specialized system for worldwide standardization. National bodies that are members of ISO or IEC participate in the development of International Standards through technical committees established by the respective organization to deal with particular fields of technical activity. ISO and IEC technical committees collaborate in fields of mutual interest. Other international organizations, governmental and non-governmental, in liaison with ISO and IEC, also take part in the work.

The procedures used to develop this document and those intended for its further maintenance are described in the ISO/IEC Directives, Part 1. In particular, the different approval criteria needed for the different types of document should be noted. This document was drafted in accordance with the editorial rules of the ISO/IEC Directives, Part 2 (see www.iso.org/directives or www.iec.ch/members_experts/refdocs).

ISO and IEC draw attention to the possibility that the implementation of this document may involve the use of (a) patent(s). ISO and IEC take no position concerning the evidence, validity or applicability of any claimed patent rights in respect thereof. As of the date of publication of this document, ISO and IEC had not received notice of (a) patent(s) which may be required to implement this document. However, implementers are cautioned that this may not represent the latest information, which may be obtained from the patent database available at www.iso.org/patents and https://patents.iec.ch. ISO and IEC shall not be held responsible for identifying any or all such patent rights.

Any trade name used in this document is information given for the convenience of users and does not constitute an endorsement.

For an explanation of the voluntary nature of standards, the meaning of ISO specific terms and expressions related to conformity assessment, as well as information about ISO's adherence to the World Trade Organization (WTO) principles in the Technical Barriers to Trade (TBT) see www.iso.org/iso/foreword.html. In the IEC, see www.iec.ch/understanding-standards.

This document was prepared by Joint Technical Committee ISO/IEC JTC 1, *Information technology*, Subcommittee SC 17, *Cards and security devices for personal identification*.

This second edition cancels and replaces the first edition (ISO/IEC 24789-2:2011), which has been technically revised.

The main changes are as follows:

— all methods have been revised to bring them to the latest technical status;

— additional details are defined in the method ICM adhesion;

— plasticizer changed from DOP to DOTP;

— temperature humidity cycling method is replaced by temperature and exposure with humidity variation;

— temperature and humidity aging followed by peel strength is deleted;

— ID-card static bending stress method is added;

— temperature and humidity induced dye migration method is added to the informative Annex A;

— mechanical life cycle sequence for contactless cards is added to the informative Annex A.

A list of all parts in the ISO/IEC 24789 series can be found on the ISO and IEC websites.

Any feedback or questions on this document should be directed to the user's national standards body. A complete listing of these bodies can be found at www.iso.org/members.html and www.iec.ch/national-committees.

© ISO/IEC 2024 – All rights reserved

Documents
Document Sharing Hub
Full document details: BS ISO/IEC 24789-2:2024

Introduction

This document provides methods of evaluation of identification (ID) card service life. These methods of evaluation complement the application profiles and requirements defined in ISO/IEC 24789-1 which are intended to be used by card issuers, card manufacturers and card component suppliers to represent the comparative rigour of various ID card service life applications. They provide a means for ranking and comparing the main factors affecting ID card service life in a manner that is amenable to evaluation using the methods defined or referenced in this document.

NOTE For the convenience of certain users, non-SI equivalents are given for some quantity values where these are in common use in the ID card industry. These equivalents appear in parenthesis and are for information only.

© ISO/IEC 2024 – All rights reserved

Documents
Document Sharing Hub
Full document details: BS ISO/IEC 24789-2:2024

Identification cards — Card service life —

Part 2:
Methods of evaluation

1 Scope

This document provides methods of evaluation for ID-1 identification card service life for the applications provided in ISO/IEC 24789-1.

The listed evaluation methods represent available tests, not mandatory tests. The selection of mandatory tests is listed in ISO/IEC 24789-1.

2 Normative references

The following documents are referred to in the text in such a way that some or all of their content constitutes requirements of this document. For dated references, only the edition cited applies. For undated references, the latest edition of the referenced document (including any amendments) applies.

ISO 3310-1, *Test sieves — Technical requirements and testing — Part 1: Test sieves of metal wire cloth*

ISO 3664, *Graphic technology and photography — Viewing conditions*

ISO 4892-1, *Plastics — Methods of exposure to laboratory light sources — Part 1: General guidance*

ISO 4892-2:2013, *Plastics — Methods of exposure to laboratory light sources — Part 2: Xenon-arc lamps*

ISO/IEC 7811-2, *Identification cards — Recording technique — Part 2: Magnetic stripe: Low coercivity*

ISO/IEC 7811-6, *Identification cards — Recording technique — Part 6: Magnetic stripe: High coercivity*

ISO/IEC 7811-8, *Identification cards — Recording technique — Part 8: Magnetic stripe — Coercivity of 51,7 kA/m (650 Oe)*

ISO 9370, *Plastics — Instrumental determination of radiant exposure in weathering tests — General guidance and basic test method*

ISO/IEC 10373-1, *Cards and security devices for personal identification — Test methods — Part 1: General characteristics*

ISO/IEC 10373-2, *Identification cards — Test methods — Part 2: Cards with magnetic stripes*

ISO 13655, *Graphic technology — Spectral measurement and colorimetric computation for graphic arts images*

ISO/IEC 14443-1, *Cards and security devices for personal identification — Contactless proximity objects — Part 1: Physical characteristics*

ISO/IEC 24789-1[1)], *Identification cards — Card service life — Part 1: Application profiles and requirements*

IEC 60068-2-78, *Environmental testing — Part 2-78: Tests — Test Cab: Damp heat, steady state*

IEC 60454-2, *Pressure-sensitive adhesive tapes for electrical purposes — Part 2: Methods of test*

1) Under preparation. Stage at the time of publication: ISO/IEC FDIS 24789-1.

© ISO/IEC 2024 – All rights reserved

Documents
Document Sharing Hub

Full document details: BS ISO/IEC 24789-2:2024

3 Terms and definitions

For the purposes of this document, the terms and definitions in ISO/IEC 24789-1 and the following apply.

ISO and IEC maintain terminology databases for use in standardization at the following addresses:

— ISO Online browsing platform: available at https://www.iso.org/obp

— IEC Electropedia: available at https://www.electropedia.org/

3.1 Terms and definitions

3.1.1
card fracture
crack or break in a card whose depth is at least one third of the card thickness

3.1.2
contactless integrated circuit card
card into which integrated circuit and coupling means have been placed, such that the communication to such integrated circuit is done in a contactless manner

3.2 Abbreviated terms

ATQA	Answer To reQuest, Type A
ATQB	Answer To reQuest, Type B
ATR	answer to reset
DICC	dual interface integrated circuit card, as defined in ISO/IEC 10373-1
DOTP	dioctyl terephthalate CAS 6422-86-2
IC	integrated circuit, as defined in ISO/IEC 7816-1
ICC	integrated circuit card, as defined in ISO/IEC 7810
ICM	integrated circuit model
PICC	proximity integrated circuit(s) card or object, as defined in the ISO/IEC 14443 series
PVC	polyvinyl chloride
RH	relative humidity
VICC	vicinity integrated circuit(s) card or object, as defined in the ISO/IEC 15693 series

4 Default items applicable to the evaluation methods

4.1 Test environment

Unless otherwise specified, testing shall take place in an environment having a temperature of 23 °C ± 3 °C (73 °F ± 5 °F) and a relative humidity (RH) of 40 % to 60 %.

4.2 Pre-conditioning

Pre-conditioning is mandatory for all test methods. The identification card shall be conditioned in the test environment for 16 h before testing.

© ISO/IEC 2024 – All rights reserved

Documents
Document Sharing Hub
Full document details: BS ISO/IEC 24789-2:2024

4.3 Default tolerance

Unless otherwise specified, a default tolerance of ±5 % shall be applied to the quantity values given to specify the characteristics of the test equipment (for example linear dimensions) and the test method procedures (for example test equipment adjustments).

4.4 Total measurement uncertainty

Total measurement uncertainty shall be reported with the results and is considered when judging conformity. The total measurement uncertainty should be less than 20 % of the permitted tolerance range. JCGM 100 provides guidance for determining and expressing the total measurement uncertainty.

5 Test methods

5.1 Surface abrasion

5.1.1 General

The test simulates mechanical abrasion of the card surface.

5.1.2 Apparatus

5.1.2.1 Abraser, with vacuum pick up or equivalent:

— abrasive wheels pair (TABER® CS-10F); [2)]

— resurfacing disks (TABER® S-11);

— dry soft cloth, or soft brush, or both;

— hole punch or equivalent;

— 500 g total load per wheel (250 g additional – no counter weight wheels);

— clamping ring (outer retaining ring).

5.1.3 Procedure

Prepare test cards that possess all desired information and features.

Use the notch location as per Figure 1 if the area of interest falls in the wheel path. If the area of interest does not fall inside the wheel path in Figure 1 then:

— the card may be moved to a different location on the turntable, so the area of interest is in the wheel path;

— if only one card is tested, a place holder card shall be used to position the test card on the turntable so the area of interest is abraded with minimal wheel bouncing;

— notches / holes for mounting the cards on the turntable shall be made in one or both cards;

— location of wear pattern tested shall be noted on the test report.

2) TABER® Industries is a trade name of products supplied by TABER® Industries. This information is given for the convenience of users of this document and does not constitute an endorsement by ISO or IEC of the product named. Equivalent products may be used if they can be shown to lead to same result.

© ISO/IEC 2024 – All rights reserved

Documents
Document Sharing Hub
Full document details: BS ISO/IEC 24789-2:2024

Dimensions in millimetres

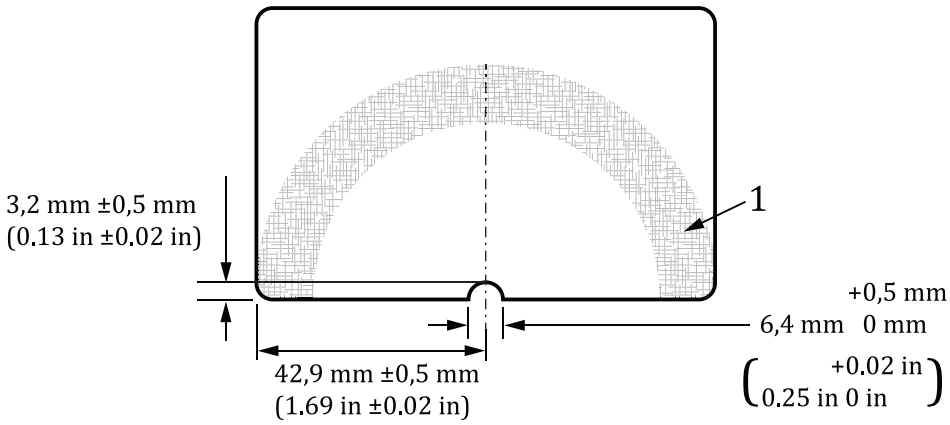

Key

1 abrasive wheel path

Figure 1 — Test card notch location

Resurface the abrasive wheels for 50 cycles before testing begins. Remove all debris from the cards and turntable by cleaning with either a dry soft cloth or soft brush, or both. Avoid direct finger contact with the test cards and abrasion wheels. Replace the S-11 resurfacing disk after a maximum of 10 uses. Use the clamping ring when re-surfacing to avoid damage to vacuum nozzle from contact with the resurfacing disk.

Mount the cards on the turntable using the clamp plate and nut without a rubber pad. Place the abrasive wheels on the cards and lower the vacuum nozzle to 3 mm (0.12 in) above them.

Start the abraser and vacuum.

— The test shall be paused every 50 cycles. The cards shall be cleaned and examined for wear-through.

— Wear-through within 6 mm (0.25 in) of the card edge shall be excluded from the examination.

— The cards and turntable shall be cleaned with a vacuum and either a dry soft cloth or soft brush, or both. Avoid direct finger contact with the test cards and abrasion wheels.

— The abrasive wheels shall be resurfaced at the beginning of each test and again after every 250 cycles.

— The resurfacing is independent of specified cycles or stopping point.

— Stop the test after wear-through of the card feature is observed.

— Figure 2 illustrates 50 cycles before and at the stopping point for a heat transfer film, varnish or similar coating. This will also be the stopping point for dye printing underneath the heat transfer film.

— Figure 3 illustrates 50 cycles before and at the stopping point for resin-based text. Wear-through is defined as the point where any character is no longer legible.

— Figure 4 illustrates the stopping point for a resin based graphical element (e.g. logo, seal). Wear-through is defined as the point where the element is no longer completely intact or functional.

— The test may be stopped after reaching the limit value of the base standard:

© ISO/IEC 2024 – All rights reserved

Documents
Document Sharing Hub
Full document details: BS ISO/IEC 24789-2:2024

Key

1 wear-through

Figure 2 — 50 cycles before (left) and at (right) stopping point for heat transfer film, varnish or similar coating

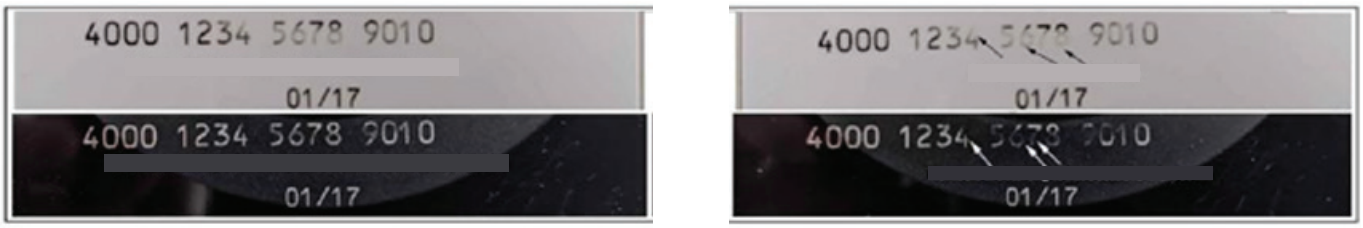

Figure 3 — 50 cycles before (left) and at (right) stopping point for resin-based text

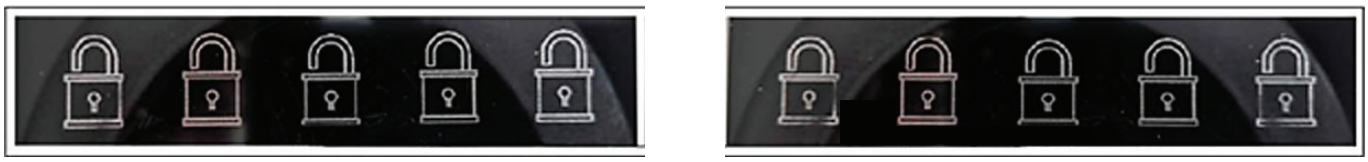

Figure 4 — 50 cycles before (left) and at (right) stopping point for resin based graphical element (e.g. logo, seal)

Test results are affected by alignment of the card and wheels. It is important that the wheels make uniform contact with the card's surface over the width of each wheel.

Test results are affected by roughness of the abrasive wheels.

5.1.4 Test report

Record the number of cycles to stopping point, along with location of wheel path.

Sample images at stopping point should be included in the test report unless security dictates their exclusion. The test report inclusion of a card image at stopping point fulfils the wheel path documentation requirement.

5.2 Magnetic stripe abrasion

5.2.1 General

The test simulates mechanical abrasion of the card surface.

© ISO/IEC 2024 – All rights reserved

Documents
Document Sharing Hub
Full document details: BS ISO/IEC 24789-2:2024

5.2.2 Apparatus

5.2.2.1 **Abraser,** with vacuum pick up or equivalent

— filler card (card of the same thickness as the card to be abraded);

— resurfacing disks (TABER® S-11);

— 500 g total load per wheel (250 g additional – no counter weight wheels);

— dry soft cleaning cloth or soft brush;

— hole punch or equivalent;

— magnetic stripe read test equipment with the following characteristics:

  — ISO/IEC 10373-2 conformant;

  — capable of reporting average signal amplitude (U_A) on middle third of Track 2 according to ISO/IEC 7811-2, ISO/IEC 7811-6 or ISO/IEC 7811-8.

5.2.3 Procedure

Prepare the card by encoding on Track 2 with a recording density of 8 ftpmm (200 ftpi), with a relative tolerance of ±10 %, at a recording current of I_{min}. Use ISO/IEC 7811-2, ISO/IEC 7811-6 or ISO/IEC 7811-8 for the definition and permitted range of I_{min} and ISO/IEC 10373-2 for the method to measure I_{min}.

Create a hole in the card as shown in Figure 5.

Measure the average signal amplitude $U_{A\ initial}$ in the read area shown in Figure 5.

Resurface the abrasive wheels for 50 cycles before testing begins and after every 100 cycles. Clean the cards and turntable using a dry soft cloth or soft brush after the abrasive wheels are resurfaced. Avoid direct finger contact with the cards and abrasion wheels. Complete the procedure for each card to the stopping point before recommencing it with another card.

Mount the card on the turntable without any compliant pad. Add a filler card of the same thickness as the card on the specimen plate so that the abrasive wheels do not bounce when the procedure is in progress. Place the abrasive wheels (with the additional loads) on the card and the vacuum nozzle 6,4 mm (0.25 in) above the cards.

Preset counter to 50 and start the abraser and vacuum. Ensure that the abrasive wheels do not bounce during the test.

Remove the card and clean the magnetic stripe thoroughly, using a clean soft cloth, to remove debris.

NOTE A completely debris-free stripe prevents damage to the magnetic head used to measure the signal amplitude.

Re-measure average signal amplitude (U_A) in the read area shown in Figure 5.

Repeat the sequence. Wheel resurfacing is required every 100 cycles, while U_A measurements are made every 50 cycles. The test may be stopped when the following occur:

— the average signal amplitude (U_A) in the read area is equal to or less than 0,70 $U_{A\ initial}$;

— after 5 000 cycles if U_A remains above 0,70 $U_{A\ initial}$ and the base standard does not specify otherwise.

Record the number of cycles to stopping point for each card tested.

© ISO/IEC 2024 – All rights reserved

Documents
Document Sharing Hub
Full document details: BS ISO/IEC 24789-2:2024