BS ISO/IEC/IEEE 21840:2019

BSI Standards Publication

Systems and software engineering — Guidelines for the utilization of ISO/ IEC/IEEE 15288 in the context of system of systems (SoS)

Documents
Document Sharing Hub

Full document details: BS ISO/IEC/IEEE 21840:2019

National foreword

This British Standard is the UK implementation of ISO/IEC/IEEE 21840:2019.

The UK participation in its preparation was entrusted to Technical Committee IST/15, Software and systems engineering.

A list of organizations represented on this committee can be obtained on request to its secretary.

This publication does not purport to include all the necessary provisions of a contract. Users are responsible for its correct application.

© The British Standards Institution 2019
Published by BSI Standards Limited 2019

ISBN 978 0 580 96372 8

ICS 35.080

Compliance with a British Standard cannot confer immunity from legal obligations.

This British Standard was published under the authority of the Standards Policy and Strategy Committee on 31 December 2019.

Amendments/corrigenda issued since publication

Date	Text affected

Documents
Document Sharing Hub

Full document details: BS ISO/IEC/IEEE 21840:2019

INTERNATIONAL STANDARD

ISO/IEC/IEEE 21840

First edition
2019-12

Systems and software engineering — Guidelines for the utilization of ISO/IEC/IEEE 15288 in the context of system of systems (SoS)

Ingénierie des systèmes et du logiciel — Lignes directrices pour l'utilisation de l'ISO/IEC/IECC 15288 dans le contexte d'un système de systèmes (SdS)

Reference number
ISO/IEC/IEEE 21840:2019(E)

© ISO/IEC 2019
© IEEE 2019

Documents
Document Sharing Hub

Full document details: BS ISO/IEC/IEEE 21840:2019

COPYRIGHT PROTECTED DOCUMENT

© ISO/IEC 2019

© IEEE 2019

All rights reserved. Unless otherwise specified, or required in the context of its implementation, no part of this publication may be reproduced or utilized otherwise in any form or by any means, electronic or mechanical, including photocopying, or posting on the internet or an intranet, without prior written permission. Permission can be requested from either ISO or IEEE at the respective address below or ISO's member body in the country of the requester.

ISO copyright office
CP 401 • Ch. de Blandonnet 8
CH-1214 Vernier, Geneva
Phone: +41 22 749 01 11
Fax: +41 22 749 09 47
Email: copyright@iso.org
Website: www.iso.org

Institute of Electrical and Electronics Engineers, Inc
3 Park Avenue, New York
NY 10016-5997, USA

Email: stds.ipr@ieee.org
Website: www.ieee.org

Published in Switzerland

© ISO/IEC 2019 – All rights reserved
© IEEE 2019 – All rights reserved

Documents Document Sharing Hub

Full document details: BS ISO/IEC/IEEE 21840:2019

Contents

Page

Foreword ..... **v**

Introduction ..... **vi**

1 Scope **1**

2 Normative References **1**

3 Terms, definitions, and abbreviated terms **1**
3.1 Terms and definitions 1
3.2 Abbreviated terms 3

4 Relationship to other standards **3**

5 Key concepts and application **4**
5.1 Differences between systems and SoS 4
5.2 Managerial and operational independence 7

6 Application of system life cycle processes to SoS **10**
6.1 Agreement processes 10
6.1.1 General 10
6.1.2 Acquisition process 12
6.1.3 Supply process 13
6.2 Organizational project-enabling processes 15
6.2.1 General 15
6.2.2 Life cycle model management process 16
6.2.3 Infrastructure management process 17
6.2.4 Portfolio management process 18
6.2.5 Human resource management process 20
6.2.6 Quality management process 21
6.2.7 Knowledge management process 22
6.3 Technical management processes 23
6.3.1 General 23
6.3.2 Project planning process 24
6.3.3 Project assessment and control process 25
6.3.4 Decision management process 27
6.3.5 Risk management process 28
6.3.6 Configuration management process 29
6.3.7 Information management process 30
6.3.8 Measurement process 31
6.3.9 Quality assurance process 32
6.4 Technical processes 33
6.4.1 General 33
6.4.2 Business or mission analysis process 36
6.4.3 Stakeholder needs and requirements definition process 37
6.4.4 System requirements definition process 39
6.4.5 Architecture definition process 41
6.4.6 Design definition process 44
6.4.7 System analysis process 46
6.4.8 Implementation process 47
6.4.9 Integration process 48
6.4.10 Verification process 49
6.4.11 Transition process 51
6.4.12 Validation process 52
6.4.13 Operation process 54
6.4.14 Maintenance process 55
6.4.15 Disposal process 56

Bibliography **58**

© ISO/IEC 2019 – All rights reserved
© IEEE 2019 – All rights reserved

Documents
Document Sharing Hub
Full document details: BS ISO/IEC/IEEE 21840:2019

IEEE notices and abstract **59**

© ISO/IEC 2019 – All rights reserved
© IEEE 2019 – All rights reserved

Documents
Document Sharing Hub

Full document details: BS ISO/IEC/IEEE 21840:2019

Foreword

ISO (the International Organization for Standardization) and IEC (the International Electrotechnical Commission) form the specialized system for worldwide standardization. National bodies that are members of ISO or IEC participate in the development of International Standards through technical committees established by the respective organization to deal with particular fields of technical activity. ISO and IEC technical committees collaborate in fields of mutual interest. Other international organizations, governmental and non-governmental, in liaison with ISO and IEC, also take part in the work.

The procedures used to develop this document and those intended for its further maintenance are described in the ISO/IEC Directives, Part 1. In particular, the different approval criteria needed for the different types of ISO documents should be noted. This document was drafted in accordance with the rules given in the ISO/IEC Directives, Part 2 (see www.iso.org/directives).

IEEE Standards documents are developed within the IEEE Societies and the Standards Coordinating Committees of the IEEE Standards Association (IEEE-SA) Standards Board. The IEEE develops its standards through a consensus development process, approved by the American National Standards Institute, which brings together volunteers representing varied viewpoints and interests to achieve the final product. Volunteers are not necessarily members of the Institute and serve without compensation. While the IEEE administers the process and establishes rules to promote fairness in the consensus development process, the IEEE does not independently evaluate, test, or verify the accuracy of any of the information contained in its standards.

Attention is drawn to the possibility that some of the elements of this document may be the subject of patent rights. ISO and IEC shall not be held responsible for identifying any or all such patent rights. Details of any patent rights identified during the development of the document will be in the Introduction and/or on the ISO list of patent declarations received (see www.iso.org/patents) or the IEC list of patent declarations received (see http://patents.iec.ch).

Any trade name used in this document is information given for the convenience of users and does not constitute an endorsement.

For an explanation of the voluntary nature of standards, the meaning of ISO specific terms and expressions related to conformity assessment, as well as information about ISO's adherence to the World Trade Organization (WTO) principles in the Technical Barriers to Trade (TBT) see www.iso.org/iso/foreword.html.

This document was prepared by Joint Technical Committee ISO/IEC JTC 1, *Information technology*, Subcommittee SC 7, *Systems and software engineering*, in cooperation with the Systems and Software Engineering Standards Committee of the IEEE Computer Society, under the Partner Standards Development Organization cooperation agreement between ISO and IEEE.

Any feedback or questions on this document should be directed to the user's national standards body. A complete listing of these bodies can be found at www.iso.org/members.html.

© ISO/IEC 2019 – All rights reserved
© IEEE 2019 – All rights reserved

Documents
Document Sharing Hub
Full document details: BS ISO/IEC/IEEE 21840:2019

Introduction

Application of systems engineering to systems of systems has become increasingly important for the realization and sustainability of large and persistent sociotechnical systems in domains as varied as healthcare, transportation, energy, and defense, and contexts such as corporations, cities, and government. This has been intensified in the last fifteen years by the pervasiveness of information technology (IT), illustrated by new technologies and paradigms such as Sensor Networks, Cloud Computing, the Internet of Things, Big Data, Smart Devices and Ambient Intelligence. It is, for instance, the application of these technologies to cities that transform them into smarter cities.

This document provides guidance for the utilization of ISO/IEC/IEEE 15288 in the context of SoS. While ISO/IEC/IEEE 15288 applies to systems in general (including constituent systems), this document provides guidance on the application of these processes to the special case of SoS. However, ISO/IEC/IEEE 21840 is not a self-contained SoS replacement for ISO/IEC/IEEE 15288. This document is intended to be used in conjunction with ISO/IEC/IEEE 15288, ISO/IEC/IEEE 21839 and ISO/IEC/IEEE 21841 and is not intended to be used without them.

For example, ISO/IEC/IEEE 21841 provides a taxonomy for SoS, providing specific viewpoints that align with stakeholder concerns. Using a taxonomy in conjunction with this document facilitates better communications among the various stakeholders that are involved in activities like governance, engineering, operation, and management of these SoS. However, this document does not require the use of any specific taxa in ISO/IEC/IEEE 21841.

© ISO/IEC 2019 – All rights reserved
© IEEE 2019 – All rights reserved
Documents
Document Sharing Hub
Full document details: BS ISO/IEC/IEEE 21840:2019

Systems and software engineering — Guidelines for the utilization of ISO/IEC/IEEE 15288 in the context of system of systems (SoS)

1 Scope

This document provides guidance on the application of processes in ISO/IEC/IEEE 15288 to systems of systems (SoS). The scope of this document is the same as ISO/IEC/IEEE 15288, which addresses more than systems engineering activities.

NOTE 1 Throughout the document, there is mixed use of "system of systems" and "systems of systems". "SoS" could refer to a system of systems or systems of systems. Similarly, "CS" could refer to a constituent system or constituent systems.

This document provides general guidance for each ISO/IEC/IEEE 15288 process and process outcome in the context of SoS, but it does not address specific activities, tasks, methods, or procedures. Additional processes and process outcomes unique to SoS can still be needed and are not covered by this document.

This document explores the similarities and differences between systems and SoS and, by extension, the similarities and differences between engineering of systems and SoS. The guidance contained in this document is expected to evolve as the discipline matures.

NOTE 2 In many cases, this document notes that ISO/IEC/IEEE 15288 processes or process outcomes "... applies as stated to SoS." Some interpretation within the context of SoS can still be needed.

2 Normative References

There are no normative references in this document.

3 Terms, definitions, and abbreviated terms

3.1 Terms and definitions

For the purposes of this document, the following terms and definitions apply.

NOTE For additional terms and definitions in the field of systems and software engineering, see ISO/IEC/IEEE 24765, which is published periodically as a "snapshot" of the SEVOCAB (Systems and software Engineering Vocabulary) database and which is publicly accessible at www.computer.org/sevocab.

ISO, IEC, and IEEE maintain terminological databases for use in standardization at the following addresses:

— ISO Online browsing platform: available at https://www.iso.org/

— IEC Electropedia: available at http://www.electropedia.org/

— IEEE Standards Dictionary Online: available at: http://dictionary.ieee.org

3.1.1
capability
measure of capacity and the ability of an entity (*system* (3.1.8), person or organization) to achieve its objectives

[SOURCE: ISO/IEC 19770-1:2017, 3.10, modified — Note 1 to entry has been removed.]

© ISO/IEC 2019 – All rights reserved
© IEEE 2019 – All rights reserved

AVA Documents Document Sharing Hub
Full document details: BS ISO/IEC/IEEE 21840:2019

3.1.2
constituent system
independent *system* (3.1.8) that forms part of a *system of systems* (SoS) (3.1.10)

Note 1 to entry: Constituent systems can be part of one or more SoS. Each constituent system is a useful system by itself, having its own development, *management* (3.1.5), utilization, goals, and resources, but interacts within the SoS to provide the unique *capability* (3.1.1) of the SoS.

[SOURCE: ISO/IEC/IEEE 21839:2019, 3.1.1]

3.1.3
emergence
principle that entities exhibit properties which are meaningful only when attributed to the whole, not to its parts

Note 1 to entry: These properties cannot be reduced or decomposed back down to the those of any individual *constituent system* (3.1.2).

Note 2 to entry: The definition is adapted from Reference [9].

3.1.4
governance
process of establishing and enforcing strategic goals and objectives, organizational policies, and performance parameters

[SOURCE: ISO/IEC 24765:2017, 3.1757, modified — The article "the" at the beginning of the definition has been removed.]

3.1.5
management
system (3.1.8) of controls and processes required to achieve the strategic objectives set by the organization's governing body

Note 1 to entry: Management is subject to the policy guidance and monitoring set through corporate *governance* (3.1.4).

[SOURCE: ISO/IEC/IEEE 24765:2017, 3.2338]

3.1.6
satisficing
decision technique that discards any alternative with an attribute value outside an acceptable range

[SOURCE: ISO/IEC/IEEE 24765:2017, 3.3601]

3.1.7
stage
period within the life cycle of an entity that relates to the state of its description or realization

Note 1 to entry: As used in this document, stages relate to major progress and achievement milestones of the entity through its life cycle.

Note 2 to entry: Stages often overlap.

[SOURCE: ISO/IEC/IEEE 15288:2015, 4.1.43, modified — The expression "this International Standard" has been replaced with "this document".]

3.1.8
system
combination of interacting elements organized to achieve one or more stated purposes

[SOURCE: ISO/IEC/IEEE 15288:2015, 4.1.46, modified — Note 1, 2, and 3 to entry have been removed.]

© ISO/IEC 2019 – All rights reserved
© IEEE 2019 – All rights reserved
Documents Document Sharing Hub
Full document details: BS ISO/IEC/IEEE 21840:2019

3.1.9
system-of-interest
system (3.1.8) whose life cycle is under consideration

Note 1 to entry: In this document, the system-of-interest is a *system of systems* (3.1.10).

[SOURCE: ISO/IEC/IEEE 15288:2015, 4.1.48, modified — The words "in the context of this International Standard" have been removed; Note 1 to entry has been added.]

3.1.10
system of systems
set of *systems* (3.1.8) and system elements that interact to provide a unique *capability* (3.1.1) that none of the *constituent systems* (3.1.2) can accomplish on its own

Note 1 to entry: System elements can be necessary to facilitate interaction of the constituent systems in the system of systems.

[SOURCE: ISO/IEC/IEEE 21839:2019, 3.1.4, modified — The abbreviated term "SoS" has been removed.]

3.1.11
system life cycle
period that begins when a *system* (3.1.8) is conceived and ends when the system is no longer available for use

[SOURCE: ISO/IEC/IEEE 24765:2017, 3.4108]

3.1.12
taxonomy
scheme that partitions a body of knowledge and defines the relationships among the pieces

[SOURCE: ISO/IEC/IEEE 24765:2017, 3.4167, modified — Note 1 to entry has been removed.]

3.2 Abbreviated terms

CS constituent system, constituent systems

SE systems engineering

SOI system of interest

SoS system of systems, systems of systems

SoSE system of systems engineering

4 Relationship to other standards

This document is part of a set of documents that are intended to be used together:

ISO/IEC/IEEE 15288 provides the fundamental basis for this document by establishing a model set of system life cycle processes.

ISO/IEC/IEEE 21839 addresses SoS considerations in life cycle stages of a system.

This document provides guidance on the use of ISO/IEC/IEEE 15288 in the context of SoS, including considerations for how CS relate to each other within the SoS. However, the use of any specific taxa in ISO/IEC/IEEE 21841 is not required.

ISO/IEC/IEEE 21841 provides a taxonomy for SoS, providing specific viewpoints that align with management and governance concerns. Using a taxonomy in conjunction with this document facilitates better communications among the various stakeholders that are involved in activities like governance, engineering, operation, and management of these SoS.

© ISO/IEC 2019 – All rights reserved
© IEEE 2019 – All rights reserved

Documents
Document Sharing Hub
Full document details: BS ISO/IEC/IEEE 21840:2019

Figure 1 highlights these relationships.

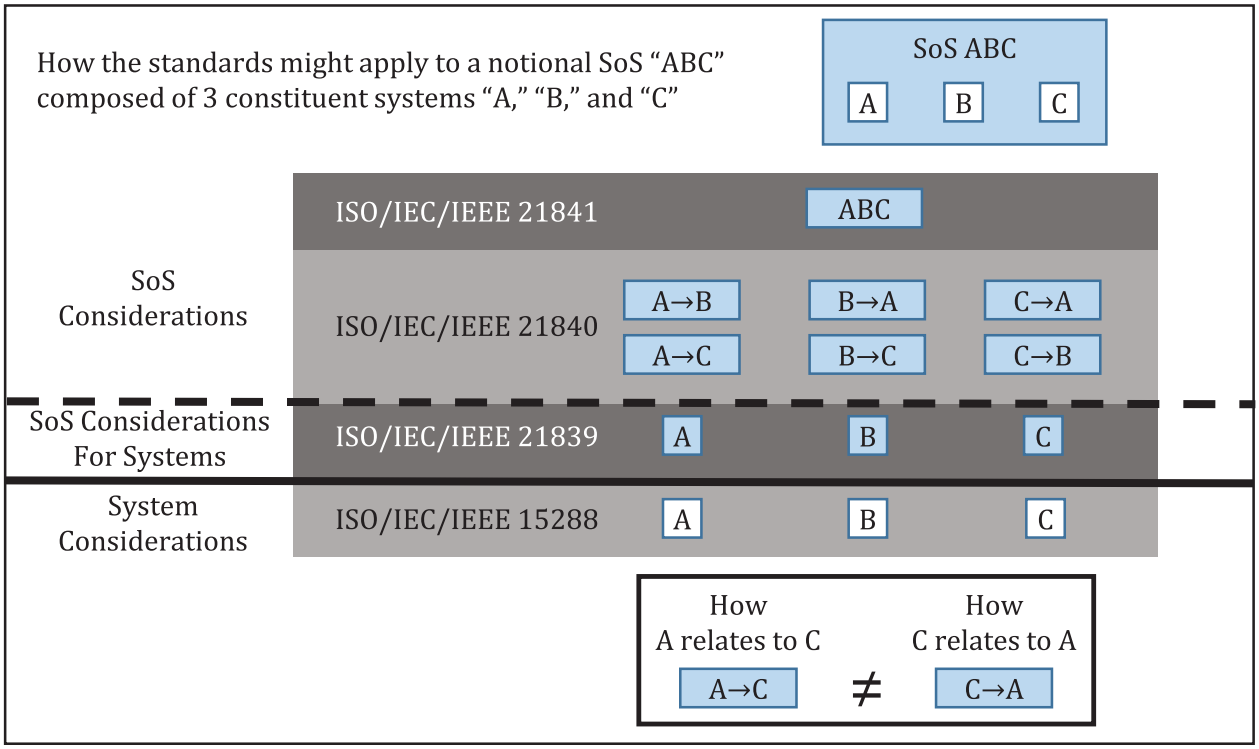

Figure 1 — Relationship between the standards

5 Key concepts and application

5.1 Differences between systems and SoS

To apply the guidance in the document, it is necessary to understand the differences between systems and SoS in which the CS are managerially and operationally independent[11]. Figure 2 shows that an SOI consists of system elements, some of which could be systems themselves. These systems also consist of system elements, some of which could be systems and so on. ISO/IEC/IEEE 15288 can be applied to any of these systems. If SoS were the same as systems, but just on a bigger scale, there would be little need for additional guidance.

It is important to note that a collection of systems may not be an SoS. For example, Figure 2 shows a collection of systems and system elements, but is this an SoS?

© ISO/IEC 2019 – All rights reserved
© IEEE 2019 – All rights reserved
Documents Document Sharing Hub
Full document details: BS ISO/IEC/IEEE 21840:2019

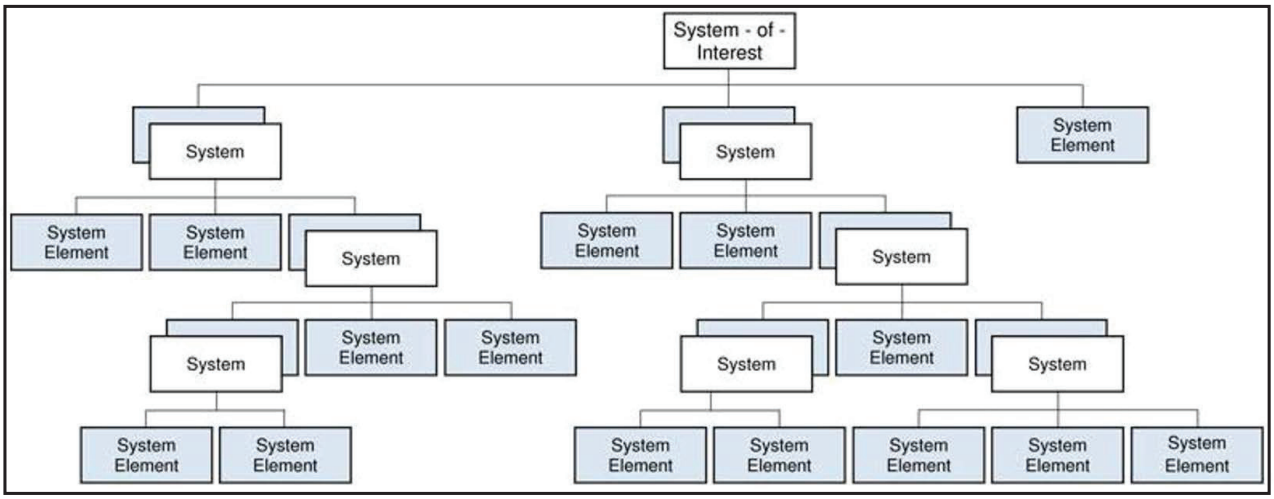

NOTE This figure is reproduced from ISO/IEC/IEEE 15288:2015, Figure 2.

Figure 2 — Overview of a system

It is not possible to determine from a hierarchy diagram if a collection of systems is an SoS. Rather than being described in terms of hierarchies, SoS are often described as general networks as shown in Figure 3.

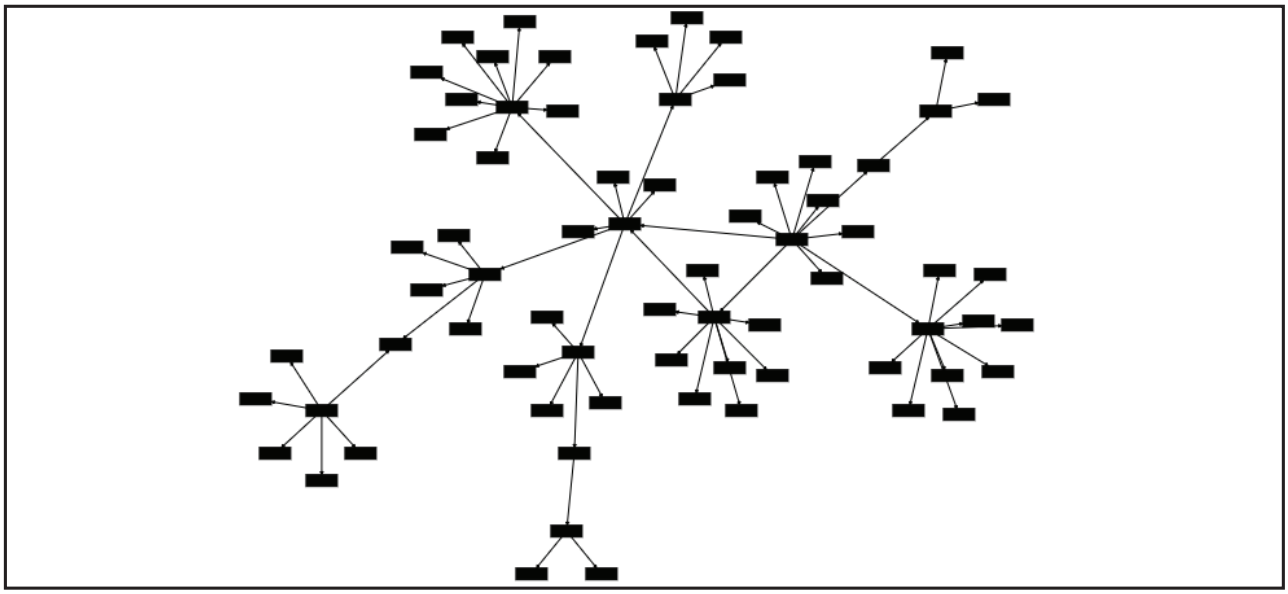

Figure 3 — Overview of an SoS

Within an SoS, each CS is an independent system that forms part of an SoS. CS can be part of one or more SoS. Each CS is a useful system by itself, having its own development, management, utilization, goals, and resources, but interacts within the SoS to provide the unique capability of the SoS. These additional attributes are what distinguish SoS from a collection of systems.

The differences between a system and an SoS are not in the physical or hierarchical structure of the component parts, but rather in the behavioral and managerial characteristics of those parts. The differences between systems and SoS (and between SE and SoSE) are complex. Table 1 describes examples of drivers of SE compared with SoSE, while Table 2 and Table 3 describe some of the differences between systems and SoS. These differences reflect the attributes or characteristics around which the guidance on the application of ISO/IEC/IEEE 15288 to SoS are framed.

© ISO/IEC 2019 – All rights reserved
© IEEE 2019 – All rights reserved

Documents
Document Sharing Hub
Full document details: BS ISO/IEC/IEEE 21840:2019

However, it is important to understand that characteristics differ between system and SoS, and are not mutually exclusive.

Table 1 — Example drivers of SE and SoSE

	SE	SoSE
Focus	Single complex system	Multiple integrated complex systems
Objective	Optimization	Satisficing, sustainment
Boundaries	Static	Dynamic
Problem	Defined	Emergent
Structure	Hierarchical	Network
Goals	Unitary	Pluralistic
Timeframe	System life cycle	Continuous
Centricity	Platform	Network
Tools	Many	Few
Management framework	Established	Various
NOTE This table is adapted from Reference [10].		

Table 2 — Examples of differences between systems and SoS

Systems tend to have	SoS tend to have
A clear set of stakeholders	Multiple levels of stakeholders with mixed and possibly competing interests
Clear objectives and purpose	Multiple and possibly contradictory objectives and purpose
Clear management structure and clear accountabilities	Disparate management structures with no clear accountability
Clear operational priorities, with escalation to resolve priorities	Multiple, and sometimes different, operational priorities with no clear escalation routes
A single life cycle	Multiple lifecycles with elements being implemented asynchronously
Clear ownership with the ability to move resources between elements	Multiple owners making individual resourcing decisions
NOTE This table is adapted from Reference [11].	

Table 3 — Examples of differences between systems and SoS

Attribute	System	SoS
Autonomy	Autonomy is ceded by parts to grant autonomy to the system.	Autonomy is retained and exercised by CS while contributing to fulfilling the purpose of the SoS.
Belonging	Parts are akin to family members; they did not choose themselves but came from parents. Belonging of parts is in their nature.	While some CS are directed or coerced to belong to SoS, some CS could be unaware of the SoS. Some CS choose to belong on a cost/benefits basis; also, to cause greater fulfillment of their own purposes, and because of belief in the overarching SoS purpose.
Connectivity	Prescient design, along with parts, with high connectivity hidden in elements, and minimum connectivity among major subsystems.	Dynamically supplied by CS with every possibility of myriad connections between CS, possibly via a net-centric architecture, to enhance SoS capability.
NOTE This table is adapted from Reference [8].		

© ISO/IEC 2019 – All rights reserved
© IEEE 2019 – All rights reserved
Documents Document Sharing Hub
Full document details: BS ISO/IEC/IEEE 21840:2019

Table 3 *(continued)*

Attribute	System	SoS
Diversity	Managed i.e. reduced or minimized by modular hierarchy; parts' diversity encapsulated to create a known discrete module whose nature is to project simplicity into the next level of the hierarchy.	Increased diversity in SoS capability achieved by released autonomy, committed belonging, and open connectivity.
Emergence	Foreseen, both good and bad behavior, and designed in or tested out as appropriate.	Enhanced by deliberately not being foreseen, though its crucial importance is, and by creating an emergence capability climate, that will support early detection and elimination of bad behaviors.
NOTE This table is adapted from Reference [8].		

5.2 Managerial and operational independence

ISO/IEC/IEEE 15288:2015, Annex G contains general information on SoS. Details of SoS characteristics and types in ISO/IEC/IEEE 15288:2015, G.2 are shown in the box.

SoS are characterized by managerial and operational independence of the constituent systems, which in many cases were developed and continue to support originally identified users concurrently with users of the SoS. In other contexts, each constituent system itself is a SOI; its existence often predates the SoS, while its characteristics were originally engineered to meet the needs of their initial users. As constituents of the SoS, their consideration is expanded to encompass the larger needs of the SoS. This implies added complexity particularly when the systems continue to evolve independently of the SoS. The constituent systems also typically retain their original stakeholders and governance mechanisms, which limits alternatives to address the needs of the SoS.

Emergence is a key characteristic of SoS – the unanticipated effects at the systems of systems level attributed to the complex interaction dynamics of the constituent systems. In SoS, constituent systems are intentionally considered in their combination, so as to obtain and analyze outcomes not possible to obtain with the systems alone. The complexity of the constituent systems and the fact they may have been designed without regard to their role in the SoS, can result in new, unexpected behaviors. Identifying and addressing unanticipated emergent results is a particular challenge in engineering SoS.

Applying SE to SoS aims to engineer the desired emergent behavior and minimize the undesired emergent behavior - the anticipated effects are generally the reason for the SoS conceptualization.

Systems operate within a context of managerial control which is subject to governance[7]. Organizations govern a portfolio of programs through goals and objectives, subject to laws, regulations, and external agreements such as contracts. Programs manage some number of projects to achieve those goals and objectives.

An SoS comprises CS and other system elements that can be necessary to facilitate interaction of the CS in the SoS. Relationships between CS and system elements affect the SoS. Systems that do not interact are not part of an SoS as shown in Figure 4. Organization A owns System V which consumes inputs and produces outputs. Likewise, Organization B owns System W which also consumes inputs and produces outputs. Systems have capabilities. Outcomes can be partially or totally achieved when the system behaves. Because Systems V and W do not interact, there is no SoS.

NOTE The terms "organization" and "owns" suggest that individual CS could reside in different companies or enterprises. However, CS could reside within different organizational elements within a particular company or enterprise.

© ISO/IEC 2019 – All rights reserved
© IEEE 2019 – All rights reserved

Documents
Document Sharing Hub
Full document details: BS ISO/IEC/IEEE 21840:2019

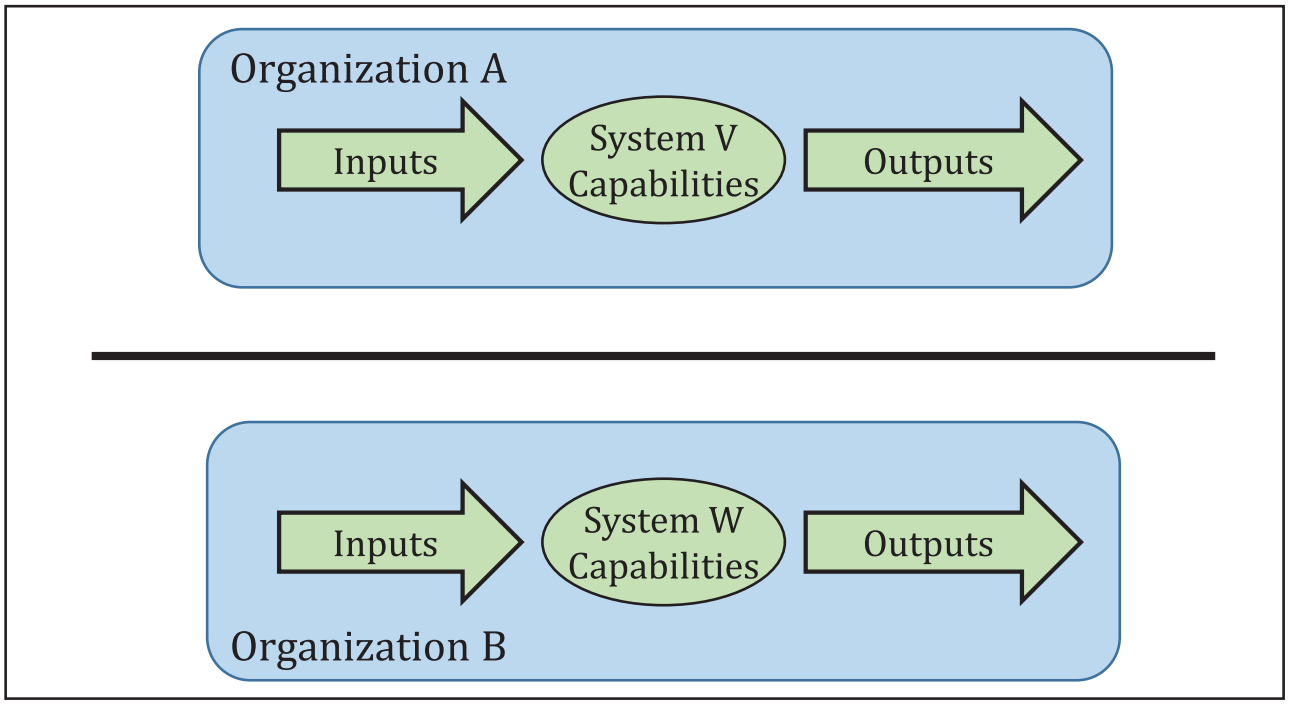

Figure 4 — Systems that don't interact are not part of an SoS

An essential characteristic is that CS within the SoS are operationally independent[11]. That is, the CS can (and do) operate independently to fulfil some number of purposes on their own, separate from the SoS. However, an SoS is a set of systems and system elements that interact to provide a unique capability that none of the CS can accomplish on its own as shown in Figure 5. Because the SoS provides unique capabilities beyond those of the CS, the SoS could have unique inputs beyond inputs originally needed by the CS. Also, while it is possible that the emergent capability is provided by one of the CS, this isn't necessarily the case. Some SoS can (and do) provide outputs not conveyed by one of the CS.

© ISO/IEC 2019 – All rights reserved
© IEEE 2019 – All rights reserved
Documents Document Sharing Hub
Full document details: BS ISO/IEC/IEEE 21840:2019

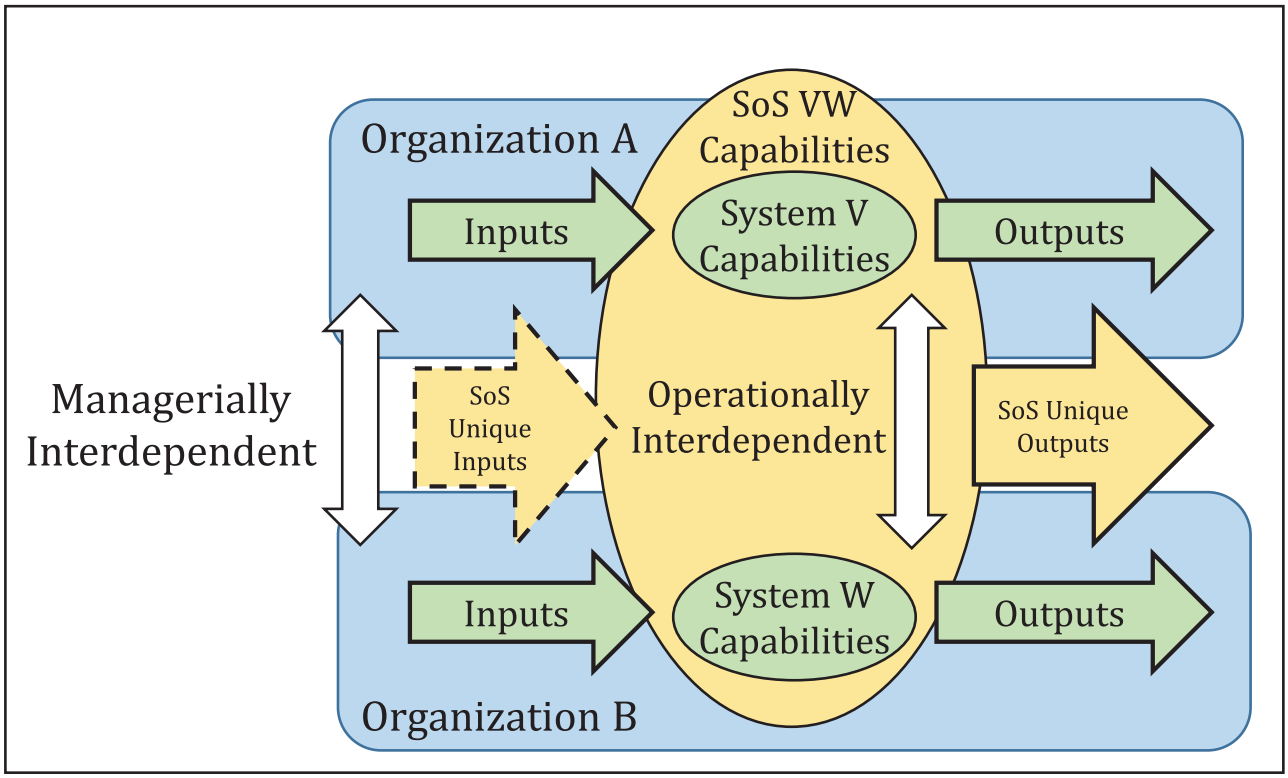

Figure 5 — A set of systems and system elements that interact to provide a unique capability

SoS add value through the unique SoS capabilities from the integration and/or sequencing capabilities of CS and other elements in time and space. Consequently, SoS accommodate delivery of outputs to multiple consumers that could have different priorities and expectations. While CS operate independently from each other for their own purposes, they also operate interdependently with each other and other elements to produce the SoS outputs. CS are never totally independent, yet they are also never totally subservient to the SoS[8]. Unlike a system, which has been designed to fulfil a purpose and an expected quality of service, the quality of service provided by an SoS can be subject to variation.

Another essential characteristic is that CS within the SoS are both managerially independent and interdependent. Managerial independence suggests that the CS are likely to be managed by organizations that retain some degree of independence even though they are interdependent while participating in SoS. The implication is that these organizations could have goals and objectives for the CS that differ from those of the SoS. If so, there is likely some degree of independence and interdependence of governance, as well as some degree of independence and interdependence of management. Regardless of the means of managing the organizations, alignment (or lack thereof) in the goals and objectives will affect the SoS. While some CS are directed or coerced to belong to SoS, some CS could be unaware of the SoS. Some CS choose to belong on a cost/benefits basis, also to cause greater fulfillment of their own purposes, and because of their belief in the overarching SoS purpose.

Figure 6 highlights the various kinds of relationships for governance and management. Multiple projects can be necessary to design, produce, and operate a system. SoS composed from some combination of systems U, V, and W would need to address the operational independence of the systems and the managerial independence of organizations.

© ISO/IEC 2019 – All rights reserved
© IEEE 2019 – All rights reserved

Documents
Document Sharing Hub
Full document details: BS ISO/IEC/IEEE 21840:2019

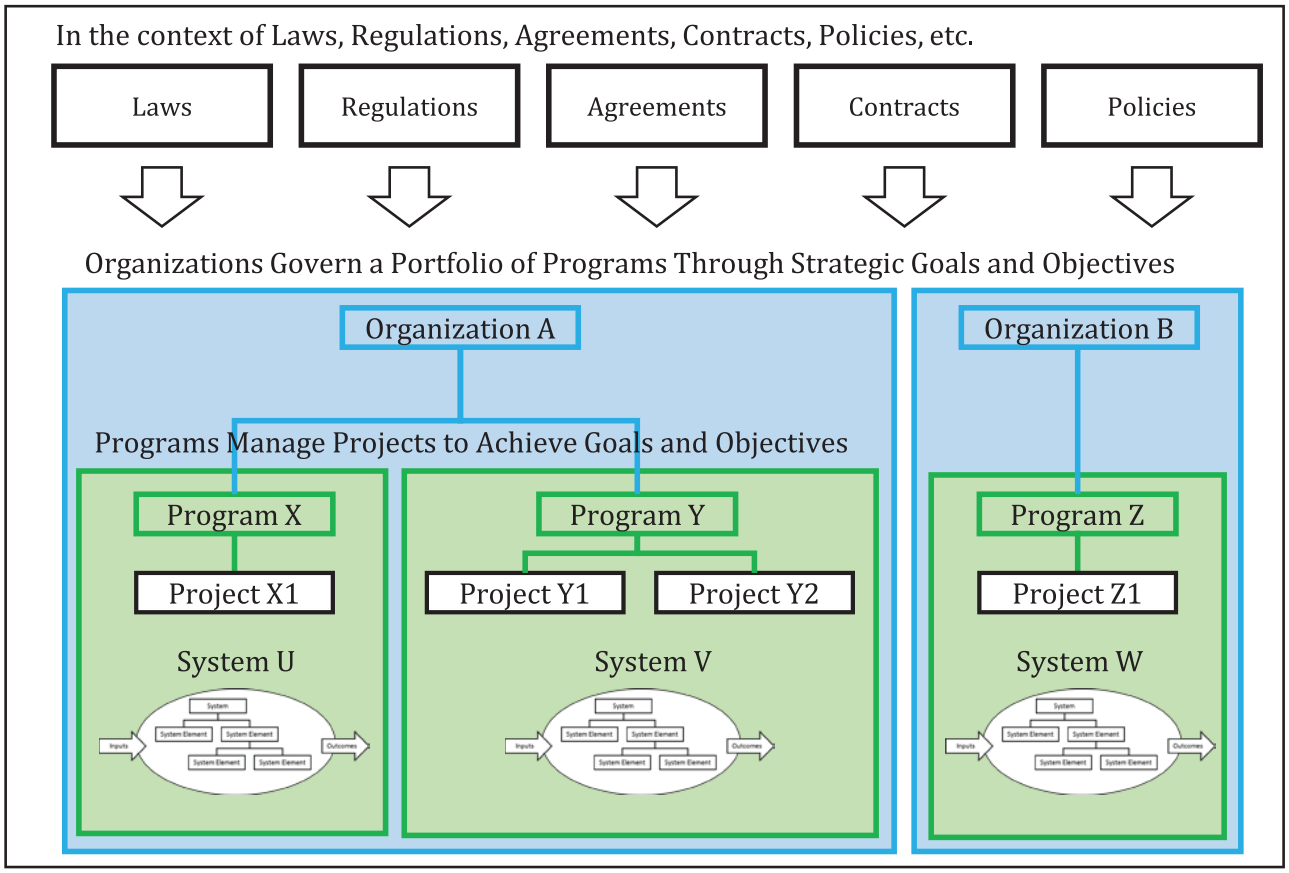

Figure 6 — Degree of operational and managerial independence varies

The processes from ISO/IEC/IEEE 15288 are applied in a highly iterative and concurrent manner. In some cases, there could be "waves" of SoS revision. In other cases, SoS changes could occur continually, with many processes operating on a continuous basis to implement evolutionary change. These complexities do not invalidate ISO/IEC/IEEE 15288 or SE, but rather form an alternative context for their application. The descriptions of the use of the ISO/IEC/IEEE 15288 processes and outcomes should be reconsidered in light of the alternative context. Clause 6 provides general guidance in the context of SoS.

6 Application of system life cycle processes to SoS

6.1 Agreement processes

6.1.1 General

ISO/IEC/IEEE 15288:2015, 6.1 contains general information on the application of system life cycle agreement processes to a system as shown in the box.

© ISO/IEC 2019 – All rights reserved
© IEEE 2019 – All rights reserved
Documents Document Sharing Hub
Full document details: BS ISO/IEC/IEEE 21840:2019

This subclause specifies the requirements for the establishment of agreements with organizational entities external and internal to the organization.

The Agreement Processes consist of the following:

a) Acquisition process – used by organizations for acquiring products or services;

b) Supply process – used by organizations for supplying products or services.

These processes define the activities necessary to establish an agreement between two organizations. If the Acquisition process is invoked, it provides the means for conducting business with a supplier. This may include products that are supplied for use as an operational system, services in support of operational activities, or elements of a system being provided by a supplier. If the Supply process is invoked, it provides the means for an agreement in which the result is a product or service that is provided to the acquirer.

NOTE Security is an increasing concern in systems engineering. See ISO/IEC 27036, *Security techniques — Information security for supplier relationships*, for requirements and guidance for suppliers and acquirers on how to secure information in supplier relationships. Specific aspects of information security supplier relationships are addressed in Parts 3 and Part 4.

ISO/IEC/IEEE 15288:2015, Annex G contains general information on the application of system life cycle processes to SoS. Details of agreement processes in ISO/IEC/IEEE 15288:2015, G.3.2 are shown in the box.

Agreement Processes are crucial for SoS because they establish the modes of developmental and operational control among the organizations responsible for the SoS and the often independent constituent systems. Constituent systems, which are acquired and managed by different organizations, often hold original objectives that may not align with those of the SoS. Except in the directed SoS case, the SoS organization cannot task a constituent system organization without their cooperation. In an acknowledged or collaborative SoS, these tasks are balanced against the tasks of the constituent system as a SOI in its own right. For virtual SoS, agreement processes may be informal, or considered only for analysis purposes.

The Agreement processes description from ISO/IEC/IEEE 15288 applies as stated to SoS with the following additions.

Because CS exist already and are being used for other purposes, agreements between the CS and its suppliers can already exist. Those agreements could be particularly important if the SoS expects the CS to change to meet SoS needs. For example, if the SoS has the requirement for changes to CS, this could affect existing agreements the CS has in place with its suppliers. However, depending on the degree of operational or managerial independence, CS may not be obliged to acknowledge or adjust based on the SoS requirements.

For some SoS, it is possible that the Agreement processes as stated do not apply at all, with no evidence of Acquisition or Supply processes. In such cases, “agreement” can be considered in the conceptual sense only, in that participating CS owners could form agreements among each other. In some cases, participating CS owners could even be competing and conflicting with each other. In others, formal agreements could be absent.

In SoS, agreements can be needed when there are no existing authority arrangements between the SoS and the CS. Agreements within SoS could be formal agreements, memoranda of agreement, or other less formal agreements. Loose agreements could be more appropriate for non-critical elements, while tighter, more formal agreements and associated processes could be appropriate for managing areas of higher risk or greater criticality. However, CS could interact even without formal or explicit agreement.

ISO/IEC/IEEE 15288 does not contain processes addressing collaboration or competition. Collaboration and competition involve independent action among the CS owners that facilitate collaboration or create conflicting relationships among the CS owners and SoS owner (if any). These relationships result in dynamic changes to the CS that modify the objectives, goals, and capabilities of the SoS.

© ISO/IEC 2019 – All rights reserved
© IEEE 2019 – All rights reserved

AVA Documents
Document Sharing Hub
Full document details: BS ISO/IEC/IEEE 21840:2019

Realizing a new SoS capability that is not supported by the existing CS requires some recognition of the need for the new capability, and support for the need from the CS owners. Revised agreements for example, may be needed to establish and maintain interoperability between CS. These agreements could be obtained external to a typical SE span of control; however, application of SE processes can help influence reaching suitable agreements. The obtainment of SoS capabilities requires interaction between the CS within the SoS. These interactions could require agreements to establish and maintain interoperability among these systems. Used in concert with Interface Management, the Agreement process can be used to establish and maintain technical interface agreements between CS owners and maintainers.

6.1.2 Acquisition process

6.1.2.1 Purpose

The purpose of the Acquisition process in ISO/IEC/IEEE 15288:2015, 6.1.1 is shown in the box.

> The purpose of the Acquisition process is to obtain a product or service in accordance with the acquirer's requirements.
>
> NOTE As part of this process, the agreement is modified when a change request is agreed to by both the acquirer and supplier.

The purpose of the Acquisition process in ISO/IEC/IEEE 15288:2015, 6.1.1 applies as stated to SoS with the following additions.

For an SoS, the organization (single or collaborative) for the SoS is the acquirer and the suppliers could be the organizations that manage the CS. Organizations participating in the SoS would also have to coordinate any system elements required by the SoS beyond the CS. Terms such as participant or "partner" could be more applicable than acquirer and supplier.

In the context of SoS, an acquirer obtains the capabilities of CS, sometimes without explicit agreement, and without acquiring the CS that produced the capabilities. The acquirer could still need to obtain system elements (i.e., system elements that are not CS, or any system elements required by the SoS beyond the CS).

There could be the occasion where the functionality or interface behaviors for a CS require modification or an expectation for coordinated changes to the CS. In these cases, applying SE supports the acquisition process by defining the functional, performance or technical requirements allocated to each CS to support the capability to be achieved by the SoS when these CS interact.

6.1.2.2 Outcomes

The outcomes of the Acquisition process in ISO/IEC/IEEE 15288:2015, 6.1.1 apply as stated in the boxes with the following additions:

> a) A request for supply is prepared.

It is possible that a request for supply by the organization that governs the SoS does not have the same formality as could be expected within a system. Instead of a formal request for supply for specific products or services, a search for specific capabilities or a request for information about existing and planned capabilities can be made. In an SoS governance sense, a request for supply could only have or need partial influence on the component outcome. For example, there could be standards and rules for certain aspects of certain types of CS, but little interest in definition of the full acquisition scope of that item. Things such as collaborative and informal agreements and influencing by demonstrating potential mutual benefits (to both SoS governance and CS suppliers) could apply.

© ISO/IEC 2019 – All rights reserved
© IEEE 2019 – All rights reserved
Documents Document Sharing Hub
Full document details: BS ISO/IEC/IEEE 21840:2019

b) One or more suppliers are selected.

In an SoS, the selection of suppliers or participants can occur in several ways. The SoS could identify and negotiate the participation of a CS in an SoS. If the CS are managerially dependent, the selection of suppliers could follow a path like that of conventional systems. If the CS are managerially independent, the CS likely would decide for themselves. Rather than selecting suppliers, suppliers/candidate organizations could choose to participate in the SoS (i.e., self-select), but at least in some cases, they could be able to do so only if they play by the rules (established through the governance of the SoS) which could have some controls (e.g., shall be accredited/meet criteria to be allowed to join the SoS context) or be uncontrolled (anyone can join, but the integrated behavior is uncertain or poor unless certain rules/minimum requirements are met).

c) An agreement is established between the acquirer and supplier.

In addition to formal approaches like contracts, less formal approaches such as memoranda of agreement and memoranda of understanding can be effective in the management arrangements for some types of SoS. For some types of SoS, though, agreements could be informal or tacit. Accepting terms of use for a product or service is one type of agreement. Some types of SoS operate effectively even in the absence of agreements.

A supplier can be a freely-available source of information, or an agreement could be already held (for example, where the information is being used in a different context). In either case, it is possible that a formal agreement does not need to be established.

d) A product or service complying with the agreement is accepted.

In the context of SoS, especially if the agreement approach is informal, "compliance" could mean something different than in the context of systems, where agreements and means to compel compliance can be formal. Within an SoS, especially in the absence of a formal agreement, acquirers could find that they have little leverage over suppliers to deliver acceptable products and services on the anticipated schedule. Consequently, acquirers should adjust their plans and processes to accommodate these realities. Obtaining or using an existing CS to gain a product or service, and agreeing to its terms of use, is one type of acceptance.

Based on marketplace and trust, a CS could be trusted by an SoS customer to comply with appropriate standards without explicit evidence of that compliance (e.g., a mobile phone). If the customer subsequently finds that the CS fails in a way that shows the SoS customer that the CS is not compliant and has breached that trust, the SoS customer could remove the CS from the SoS or seek additional means to gain the appropriate trust. This kind of approach could work in non-critical environments; more critical environments with significant consequences (risk) could demand more explicit up-front compliance.

e) Acquirer obligations defined in the agreement are satisfied.

Within an SoS, acquirers can obtain capabilities from CS without explicit agreements, so an SoS acquirer could have no explicit obligations to the CS. Or, depending on the type of SoS, acquirers could have fewer or different obligations than with systems. However, if those obligations are documented in an agreement of some type, including general terms of use, the acquirer should endeavor to satisfy them.

6.1.3 Supply process

6.1.3.1 Purpose

The purpose of the Supply process in ISO/IEC/IEEE 15288:2015, 6.1.2 is shown in the box.

© ISO/IEC 2019 – All rights reserved
© IEEE 2019 – All rights reserved

Documents
Document Sharing Hub
Full document details: BS ISO/IEC/IEEE 21840:2019