[1]	page 1 of 9.	[2] CECC 22 141-007
ELECTRONIC COMPONENT OF ASSESSED QUALITY IN ACCORDANCE WITH GENERIC SPECIFICATION 22 000..... SECTIONAL SPECIFICATION 22 140	[4]	Issue 1 July 1988

[5] DETAIL SPECIFICATION for RADIO FREQUENCY COAXIAL CONNECTOR OF ASSESSED QUALITY: SERIES SMC

Style: Straight socket, single hole rear mounting male centre contact flexible cable outlet.

Special Features & Markings: .....

Method of cable attachment: centre conductor - solder
: outer conductor - Clamp

Mass: .....3.1g.....(Max.)

[6] Assessment level ..H... Characteristic Impedance 50 Ω Climatic category ...55/.155./21...

[7] Outline and maximum dimensions . Panel piercing and mounting details

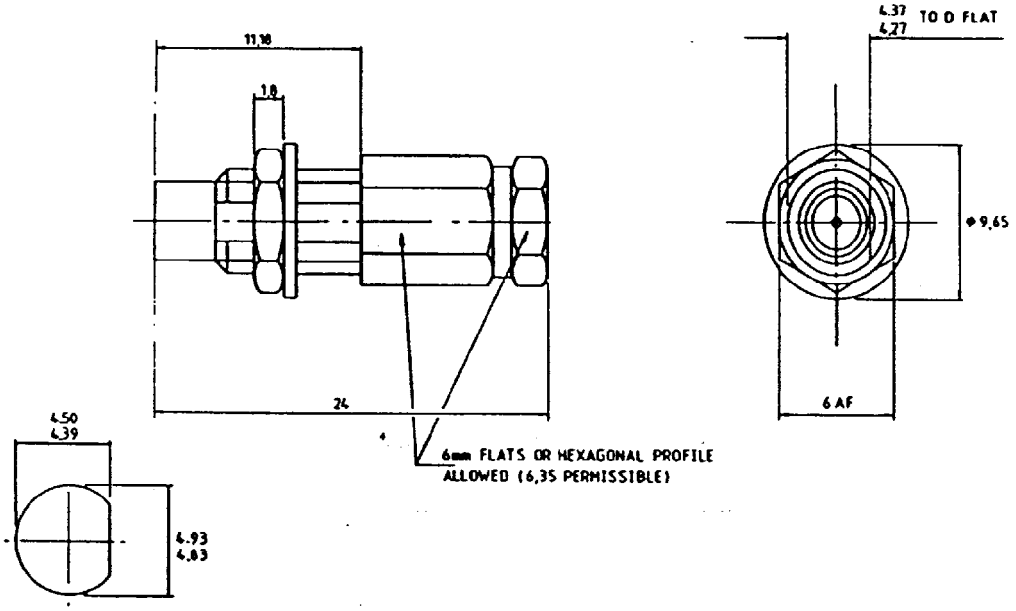

For mating interface dimensions and position of reference plane see CECC 22 140

Maximum panel thickness: for front mounting .... N/A... mm, for rear mounting ... 2 .. mm

The outline dimensions meet the requirements of IEC 169

[8] Variants

Variant No.	Description of Variant	Relevant Cables			
		IEC96		RG	National Cables
-01		50	1,1	178/U	110
.....	.....	.....	.....	404/U	.....
.....	.....	.....	.....	174A/U	95
-02	.....	50	2,2	316/U	109 116
.....	.....	.....	.....	.....	.....
.....	.....	.....	.....	.....	.....
.....	.....	.....	.....	.....	.....
.....	.....	.....	.....	.....	.....

Information about manufacturers who have components qualified to this detail specification is available in the current CECC 00 200: Qualified Products List

Documents
Document Sharing Hub
Full document details: CECC 22141-007 ISSUE 1 0

[9] PERFORMANCE (including limiting conditions of use)

RATINGS AND CHARACTERISTICS		CECC 22 140 CLAUSE	VALUE	REMARKS
ELECTRICAL				
	Variant No./ Designation			Measurement freq. range
Reflection Factor	-01	4.4.1	0,19	300MHz To 4GHz
	-02		0,19	300MHz To 4GHz
Centre contact resistance		4.4.2	≤ 5 mΩ	Initial
			≤ 15 mΩ	After conditioning
Outer conductor continuity		4.4.3	≤ 2,5 mΩ	Initial
			≤ 7,5 mΩ	After conditioning
Insulation resistance		4.4.4	≥ 1 GΩ	Initial
			≥ 500 MΩ	After conditioning
+ Proof Voltage at sea level	-01	4.4.5	0,50 kV	86 to 106 kPa
	-02		0,75	
+ Proof Voltage at 20 km altitude	-01	4.6.5	100 V	4,4 kPa
	-02		150	

+ Voltage values are r.m.s. values of a.c. at 50 to 60 Hz unless otherwise stated.

AVA Documents Document Sharing Hub
Full document details: CECC 22141-007 ISSUE 1 0

RATINGS AND CHARACTERISTICS		CECC 22 140 CLAUSE	VALUE	REMARKS
ELECTRICAL				
	Variant No./ Designation			
+ Working Voltage at sea level	-01		170 V	86 to 106 kPa
	-02		335	
+ Working Voltage at 20 km altitude	-01		45 V	4,4 kPa
	-02		85	
Screening effectiveness	-01	4.4.8	$Z_t \leq$ N/A Ω	Providing ≥ dB
	-02		N/A	
ADDITIONAL ELECTRICAL CHARACTERISTICS				
MECHANICAL				
Contact captivation:		4.5.2		
- axial force			10 N	
- torque			N/A Nm	

+ Voltage values are r.m.s. values of a.c. at 50 to 60 Hz unless otherwise stated.

AVA Documents Document Sharing Hub
Full document details: CECC 22141-007 ISSUE 1 0