This Specification contains a small amount of data which may not be legible. It has been acquired directly from the manufacturer or standards organization and Technical Indexes/IHS have not been able to obtain a better copy.

If the quality of this Specification is not fit for your intended purpose, please contact the relevant manufacturer or standards organization to clarify the details you require.

Coca-Cola Coca-Cola Coke Coke Coke Coca-Cola Cola Coca-Cola Coca-
AVA Documents
Document Sharing Hub
Full document details: CECC 50009-033 ISSUE 1 0

BRITISH STANDARDS INSTITUTION 2 PARK STREET, LONDON W1A 2BS	page: 1 of: 11	BS CECC 50 009-033 CECC 50 009-033 Issue: 1 Date: March 1984
Specification avaliable from: **MULLARD LIMITED**, Mullard House, Torrington Place, London WC1E 7HD		
ELECTRONIC COMPONENT OF ASSESSED QUALITY IN ACCORDANCE WITH BS CECC 50 000:1981		

DETAIL SPECIFICATION FOR CASE-RATED RECTIFIER DIODES

Type number(s) : BYV 20

Construction

Semiconductor material : Silicon

Encapsulation material : Glass to metal hermetically sealed

1. MECHANICAL DESCRIPTION

Third angle projection

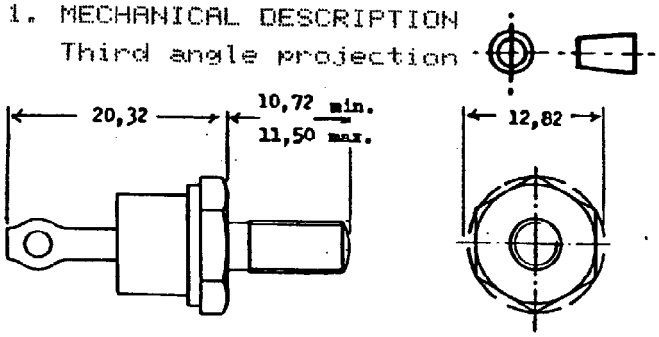

Outline IEC191/2 A3U or A3M

Marking information see page 3

All dimensions in millimetres

2. ELECTRICAL APPLICATION

CASE RATED SCHOTTKY BARRIER RECTIFIER DIODE INTENDED FOR HIGH FREQUENCY POWER SWITCHING UP TO 15A AVERAGE SQUAREWAVE 12.5A AVERAGE SINEWAVE AT 30/35/40/45 VOLTS.

3. ASSESSMENT LEVELS

F AND L

4. LIMITING VALUES (Absolute Maximum System)

These apply over the operating temperature range, unless otherwise stated.

4.1 Voltage :

4.1.1 Crest working reverse voltage V_{RWM}

4.1.2 Repetitive peak reverse voltage V_{RRM}

4.1.3 Non-repetitive peak reverse voltage V_{RSM}

4.1.4 Continuous (DC) reverse voltage V_R

} See Table 1

TABLE 1- VOLTAGE RATINGS

Type number	V_R V_{RWM}	V_{RSM} V_{RRM}
BYV20 30	15	30
BYV20 35	20	35
BYV20 40	25	40
BYV20 45	30	45

Refer to Qualified Products List PD9002 and/or CECC 00200 for details of manufacturers approved to this specification.

Coca-Cola Coke Coke Coke Coke Coke Cola Coca-Cola
AVA Documents Document Sharing Hub
Full document details: CECC 50009-033 ISSUE 1 0

4.2 Current:

4.2.1 Forward current at the breakpoint temperature (see figure 1) sinusoidal T_{case} =110 °C .. $I_{F(AV)max}$ 12.5 A
squarewave T_{case} =107 °C .. $I_{F(AV)max}$ 15 A

4.2.3 Continuous (direct) forward current ..... I_F 21 A

4.2.4 Surge (non-repetitive) forward current:
1) Without reapplication of reverse voltage I_{FSM} 300 A
2) With reapplication of reverse voltage .. I_{FSM} 300 A

4.3 Temperature

4.3.1 Case temperature
Maximum value for which the voltage ratings are specified in 4.1 ..... $T_{CASE\ max}$ 125 °C

4.3.2 Virtual junction temperature
Minimum and maximum values of the junction temperature for which the voltage and current ratings in 4.1 and 4.2 apply ..... $T_{(vj)min}$ -55 °C
max 125 °C

4.3.3 Storage temperature ..... T_{stg} min -55 °C
max 150 °C

Mechanical
Maximum permissible torque on nut ..... 1.7 Nm
Minimum permissible torque for good thermal contact 0.9 Nm

5. ELECTRICAL CHARACTERISTICS
The following characteristics are given at T_{case} = 25 °C, unless otherwise stated.

5.1 Forward voltage :

5.1.1 Maximum peak forward voltage at I_{FM} = 47 A corresponding to I_F (AV) = 15 A ..... V_{FM1} 1.1 V

5.1.2 Maximum peak forward voltage a I_{FM} = 15 A and T_{case} = 100 °C ..... V_{FM2} 0.6 V

5.2 Reverse current :
Maximum value of the peak reverse current I_{RM} at the rated repetitive reverse voltage V_{RRM}:

5.2.1 Without forward dissipation ..... I_{RM1} 15 mA

5.2.2 At T_{case}=125 °C without forward dissipation I_{RM2} 70 mA

5.3 Total power dissipation :
Maximum total power dissipation graphs as a function of the mean forward current and conduction angle ..... P_{tot} See fig 1 and 2

Maximum terminal capacitance ..... C_J 900 pF

Documents
Document Sharing Hub
Full document details: CECC 50009-033 ISSUE 1 0

5.5 Thermal resistance :

Junction to reference point, maximum value for d.c. current ..... R_{th} 2.2°c/w

6.0 Marking

A suffix 'M' added to the type number indicates that the device has metric thread

7.0 ORDERING INFORMATION

The following minimum information is necessary to order a specific device, unless otherwise specified :

- precise type number (see clause 6)
- CECC reference of detail specification with issue number and/or date when relevant
- level of quality assessment as defined in appendix II A of CECC 50 000, and, if required, screening sequence as defined in appendix VI of CECC 50 000
- any other particulars.

8. TEST CONDITIONS AND INSPECTION REQUIREMENTS

All clause references are made with respect to CECC 50 000, unless otherwise stated. samples submitted to tests marked(D) shall not be accepted for release (see clause 3.5.6 of CECC 50 000). All tests shall be made at $T_{case} = 25 \pm 5°C$ unless otherwise stated. Marking must withstand all tests of this specification which might change or damage it and must remain legible.

Documents
Document Sharing Hub
Full document details: CECC 50009-033 ISSUE 1 0