CISPR 16-1-2

Edition 2.0 2014-03
REDLINE VERSION

INTERNATIONAL STANDARD

colour inside

INTERNATIONAL SPECIAL COMMITTEE ON RADIO INTERFERENCE

BASIC EMC PUBLICATION

Specification for radio disturbance and immunity measuring apparatus and methods –
Part 1-2: Radio disturbance and immunity measuring apparatus – Coupling devices for conducted disturbance measurements

CISPR 16-1-2:2014-03 RLV(en)

Documents
Document Sharing Hub

Full document details: CISPR 16-1-2 2014 RLV

THIS PUBLICATION IS COPYRIGHT PROTECTED

Copyright © 2014 IEC, Geneva, Switzerland

All rights reserved. Unless otherwise specified, no part of this publication may be reproduced or utilized in any form or by any means, electronic or mechanical, including photocopying and microfilm, without permission in writing from either IEC or IEC's member National Committee in the country of the requester. If you have any questions about IEC copyright or have an enquiry about obtaining additional rights to this publication, please contact the address below or your local IEC member National Committee for further information.

IEC Central Office
3, rue de Varembé
CH-1211 Geneva 20
Switzerland

Tel.: +41 22 919 02 11
info@iec.ch
www.iec.ch

About the IEC
The International Electrotechnical Commission (IEC) is the leading global organization that prepares and publishes International Standards for all electrical, electronic and related technologies.

About IEC publications
The technical content of IEC publications is kept under constant review by the IEC. Please make sure that you have the latest edition, a corrigenda or an amendment might have been published.

IEC Catalogue - webstore.iec.ch/catalogue
The stand-alone application for consulting the entire bibliographical information on IEC International Standards, Technical Specifications, Technical Reports and other documents. Available for PC, Mac OS, Android Tablets and iPad.

IEC publications search - webstore.iec.ch/advsearchform
The advanced search enables to find IEC publications by a variety of criteria (reference number, text, technical committee,…). It also gives information on projects, replaced and withdrawn publications.

IEC Just Published - webstore.iec.ch/justpublished
Stay up to date on all new IEC publications. Just Published details all new publications released. Available online and also once a month by email.

Electropedia - www.electropedia.org
The world's leading online dictionary of electronic and electrical terms containing 21 000 terms and definitions in English and French, with equivalent terms in 16 additional languages. Also known as the International Electrotechnical Vocabulary (IEV) online.

IEC Glossary - std.iec.ch/glossary
67 000 electrotechnical terminology entries in English and French extracted from the Terms and Definitions clause of IEC publications issued since 2002. Some entries have been collected from earlier publications of IEC TC 37, 77, 86 and CISPR.

IEC Customer Service Centre - webstore.iec.ch/csc
If you wish to give us your feedback on this publication or need further assistance, please contact the Customer Service Centre: sales@iec.ch.

AVA Documents
Document Sharing Hub

Full document details: CISPR 16-1-2 2014 RLV

CISPR 16-1-2

Edition 2.0 2014-03
REDLINE VERSION

INTERNATIONAL STANDARD

colour inside

INTERNATIONAL SPECIAL COMMITTEE ON RADIO INTERFERENCE

BASIC EMC PUBLICATION

Specification for radio disturbance and immunity measuring apparatus and methods –
Part 1-2: Radio disturbance and immunity measuring apparatus – Coupling devices for conducted disturbance measurements

INTERNATIONAL
ELECTROTECHNICAL
COMMISSION

ICS 33.100.10; 33.100.20

ISBN 978-2-8322-1497-8

Warning! Make sure that you obtained this publication from an authorized distributor.

® Registered trademark of the International Electrotechnical Commission

Documents
Document Sharing Hub

Full document details: CISPR 16-1-2 2014 RLV

CONTENTS

FOREWORD 7

1 Scope 9
2 Normative references 9
3 Terms, definitions and abbreviations 10
3.1 Terms and definitions 10
3.2 Abbreviations 12
4 Artificial mains networks 13
4.1 General 13
4.2 AMN impedance 13
4.3 50 Ω/50 μH + 5 Ω artificial mains V-network (V-AMN) for use in the frequency range 9 kHz to 150 kHz 14
4.4 50 Ω/50 μH artificial mains V-network (V-AMN) for use in the frequency range 0,15 MHz to 30 MHz 15
4.5 50 Ω/5 μH + 1 Ω artificial mains V-network (V-AMN) for use in the frequency range 150 kHz to ~~100~~ 108 MHz 16
4.6 150 Ω artificial mains V-network (V-AMN) for use in the frequency range 150 kHz to 30 MHz 21
4.7 150 Ω artificial mains delta-network (Δ-AMN) for use in the frequency range 150 kHz to 30 MHz 21
4.7.1 General parameters 21
4.7.2 Balance of the 150 Ω artificial mains delta-network 21
4.8 Isolation 22
4.8.1 Requirement 22
4.8.2 Measurement procedure 23
4.9 Current carrying capacity and series voltage drop 23
4.10 Modified reference ground connection 23
4.11 Measurement of the voltage division factor of artificial mains V-networks 24
5 Current and voltage probes 25
5.1 Current probes 25
5.1.1 General 25
5.1.2 Construction 25
5.1.3 Characteristics 25
5.2 Voltage probe 26
5.2.1 High impedance voltage probe 26
5.2.2 Capacitive voltage probe 27
6 Coupling units for conducted current immunity measurement 29
6.1 General 29
6.2 Characteristics 29
6.2.1 General 29
6.2.2 Impedance 29
6.2.3 Insertion loss 29

Documents
Document Sharing Hub
Full document details: CISPR 16-1-2 2014 RLV

7 Coupling devices for measuring signal lines 30
7.1 General 30
7.2 Requirements for AANs (or Y-networks) 31
7.3 Requirements for artificial networks for coaxial and other screened cables 34
8 The artificial hand and series RC element 35
8.1 General 35
8.2 Construction of the artificial hand and RC element 35
8.3 The use of the artificial hand 36
9 CDNE for measurement of disturbance voltage in frequency range 30 MHz to 300 MHz 39
9.1 Instrumentation 39
9.1.1 General 39
9.1.2 Description of the CDNE measurement 40
9.1.3 Description of the RGP 40
9.2 Technical requirements for the CDNE-*X* 41
9.2.1 Mechanical and electrical parameters 41
9.2.2 Validation of the CDNE 41
9.3 Technical requirement for the RGP 44

Annex A (normative) AMNs 45
A.1 General 45
A.2 An example of the 50 Ω/50 μH, 5 Ω artificial mains V-network 45
A.3 An example of the 50 Ω/50 μH artificial mains V-network 46
A.4 Examples of the 50 Ω/5 μH, 1 Ω artificial mains V-network 46
A.5 An example of the 150 Ω artificial mains V-network 47
A.6 Example of the 150 Ω artificial mains delta-network 48
A.7 Example design for an AMN with a 50 μH inductor 49
A.7.1 The inductor 49
A.7.2 The case of the inductor 50
A.7.3 Isolation of the inductor 51
A.8 Measurement of the voltage division factor of an artificial mains V-network 51
Annex B (informative) Construction, frequency range, and calibration of current probes 54
B.1 Physical and electrical considerations for current probes 54
B.2 Equivalent electrical circuit of current probe 55
B.3 Detrimental effects of current probe measurements 56
B.4 Typical frequency response characteristics of current probes 57
B.5 A shielding structure for use with current probes 58
B.5.1 General 58
B.5.2 Theoretical model 58
B.5.3 Construction of the shielding structure 59
B.5.4 High-pass filter 60
B.6 Calibration of current probes 60

Documents
Document Sharing Hub
Full document details: CISPR 16-1-2 2014 RLV

Annex C (informative) Construction of the coupling units for current injection for the frequency range 0,15 MHz to 30 MHz ... 63
C.1 Coupling unit type A for coaxial antenna input ... 63
C.2 Coupling unit type M, for mains leads ... 63
C.3 Coupling unit type L, for loudspeaker leads ... 65
C.4 Coupling unit type Sw, for audio-frequency signals ... 66
C.5 Coupling unit type Sw, for audio, video, and control signals ... 67
Annex D (informative) Principle of operation and examples of coupling units for conducted current immunity measurements ... 68
D.1 Principle of operation ... 68
D.2 Types of unit and their construction ... 68
Annex E (normative) Example and measurement of the parameters of the asymmetric artificial network (AAN) ... 72
E.1 Description of an example of an AAN: the T-network ... 72
E.2 Measurements of the parameters of an asymmetric artificial network (AAN) ... 72
Annex F (normative) Example and measurement of the parameters of the AN for coaxial and other screened cables ... 79
F.1 Description of ANs for coaxial and other screened cables ... 79
F.2 Measurements of parameters of an AN for coaxial and other screened cables ... 79
Annex G (informative) Construction and evaluation of capacitive voltage probe ... 81
G.1 General ... 81
G.2 Physical and electrical considerations for CVP ... 81
G.3 Determination of the frequency response of the voltage division factor ... 81
G.4 Method of measurement to determine the influence of external electric fields ... 82
G.4.1 Influence of external electric field ... 82
G.4.2 Method of measurement to determine the influence of the external electric field ... 82
G.5 Pulse response ... 82
G.6 Voltage division factor dependence ... 83
Annex H (informative) Rationale for the introduction of a minimum decoupling factor between mains and EUT/receiver ports for the V-AMN ... 88
Annex I (informative) Rationale for the introduction of a phase tolerance for the V-AMN input impedance ... 89
Annex J (informative) Example CDNE set-up diagrams ... 91
J.1 CDNE-M2 and CDNE-M3 ... 91
J.2 CDNE-S*x* ... 93

Bibliography ... 94

Figure 1 – Impedance (magnitude and phase) of the V-network for Band A (see 4.3, the relevant frequency range is from 9 kHz to 150 kHz) ... 20
Figure 2 – Impedance (magnitude and phase) of the V-network for Band B (see 4.4) ... 20
Figure 3 – Impedance (magnitude and phase) of the V-network for Bands B and C (from 150 kHz to 108 MHz; see 4.5) ... 21
Figure 4 – Method for checking the balance of the arrangement for the measurement of symmetrical voltages ... 22

AVA Documents
Document Sharing Hub
Full document details: CISPR 16-1-2 2014 RLV

Figure 5 – Example of artificial mains 50 Ω/50 μH + 5 Ω V-network (see 4.3 and A.2) 24
Figure 6 – Example of artificial mains V-networks, 50 Ω/50 μH, 50 Ω /5 μH + 1 Ω or 150 Ω (see 4.4, 4.5, 4.6, A.3, A.4 and A.5, respectively) 24
Figure 7 – Circuit for RF voltage measurement on supply mains 27
Figure 8 – Circuit used to make voltage measurements between a cable and reference ground 28
Figure 9 – Measuring set-up to check the insertion loss of the coupling units in the frequency range 30 MHz to 150 MHz 30
Figure 10 – Principal circuit and ~~exemple~~ LCL requirements of an AAN 32
Figure 11 – Application of the artificial hand 38
Figure 12 – Examples of application of artificial hand to ITE 39
Figure 13 – Arrangement for validation of a CDNE 42
Figure 14 – IMA arrangement for correcting the electrical length 43
Figure 15 – Test arrangement for the measurement of the symmetric impedance (Z_{DM}) 44
Figure A.1 – Example of an alternative 50 Ω/5 μH + 1 Ω V-AMN for devices used with low impedance power sources 47
Figure A.2 – Example of a Δ-AMN for a measuring ~~apparatus~~ receiver with unbalanced input 48
Figure A.3 – Schematic of 50 μH inductor 50
Figure A.4 – General view of an AMN 50
Figure A.5 – Attenuation of an AMN filter 51
Figure A.6 – Test set-up for determining the voltage division factor 52
Figure B.1 – Typical current probe configuration 55
Figure B.2 – High-pass filter with cut-off frequency of 9 kHz 56
Figure B.3 – Transfer impedance of typical current probes 57
Figure B.4 – Set-up for current measurement using the AMN 59
Figure B.5 – Shield configuration used with current transformer 59
Figure B.6 – Schematic diagram of circuit with coaxial adaptor and current probe ~~Current probe factor k~~ transfer admittance Y_T measurement 61
Figure B.7 – ~~Current probe factor k~~ Transfer admittance Y_T as a function of frequency 61
Figure B.8 – Return loss of the coaxial adaptor terminated with 50 Ω and with the current probe (also terminated with 50 Ω) inside 62
Figure B.9 – Current probe between the two halves of the coaxial adaptor 62
Figure C.1 – Example of coupling unit type A, for coaxial input schematic diagram and construction details (see C.1 and D.2) 64
Figure C.2 – Example of coupling unit type M, for mains leads, schematic diagram and construction details (see C.2 and D.2) 65
Figure C.3 – Example of coupling unit type L for loudspeaker leads, schematic diagram and simplified construction drawing (see D.2) 66
Figure C.4 – Example of coupling unit type Sw, for audio signals. Schematic diagram and simplified construction drawing (see D.2) 67
Figure C.5 – Example of coupling unit type Sw, for audio, video and control signals, schematic diagram and simplified construction drawing (see D.2) 67
Figure D.1 – General principle of the current-injection method (see D.1) 70
Figure D.2 – Coupling unit type Sr with load resistances – Schematic diagram and simplified construction drawing (see D.2) 71

AVA Documents
Document Sharing Hub
Full document details: CISPR 16-1-2 2014 RLV

Figure E.1 – Example of a T-network circuit for one pair of wires 74
Figure E.2 – Arrangement for the termination impedance measurement 74
Figure E.3 – Arrangement for LCL probe verification 75
Figure E.4 – ~~Test~~ Arrangement for the LCL probe calibration using an L-circuit 77
Figure E.5 – ~~Test arrangement for the~~ LCL measurement of the AAN 76
Figure E.6 – Test set-up for the decoupling attenuation (isolation) of the AAN $a_{\text{decoup}} = 20\lg\left|\frac{V_1}{V_2}\right| - a_{\text{vdiv}}$ in dB for asymmetric signals between AE port and EUT port 77
Figure E.7 – Test set-up for the insertion loss (symmetric) of the AAN 77
Figure E.8 – Calibration test set-up for the AAN voltage division factor of the asymmetric circuit: $F_{\text{AAN}} = a_{\text{vdiv}} = 20\lg\left|\frac{V_1}{V_2}\right|$ in dB 78
Figure F.1 – Example of a coaxial cable AN 79
Figure F.2 – Test set-up for the coaxial and screened cable AN voltage division factor ~~a_{vdiv}~~ $F_{\text{AN}} = 20\lg\left|\frac{V_1}{V_2}\right|$ in dB 80
Figure G.1 – Configuration of a CVP 84
Figure G.2 – Equivalent circuit of a CVP 85
Figure G.3 – Test set-up to measure the frequency response 85
Figure G.4 – Electrostatic coupling model and its equivalent circuit 86
Figure G.5 – Test set-up to measure the reduction, through the shielding effect, of the influence of the external electric field caused by electrostatic coupling 86
Figure G.6 – Conversion factor deviation when cable position is changed 87
Figure G.7 – Investigation result of the cable radius dependence 87
Figure H.1 – Isolation measurement arrangement 88
Figure I.1 – Definition of impedance magnitude and phase tolerances 89
Figure J.1 – CDNE-M3 with internal attenuator a_{meas} of at least 6 dB 91
Figure J.2 – CDNE-M2 with internal attenuator a_{meas} of at least 6 dB 92
Figure J.3 – CDNE-Sx for screened cable with x internal wires and an internal attenuator of at least 6 dB 93
Table 1 – Magnitudes and phase angles of the V-network (see Figure 1) 14
Table 2 – Magnitudes and phase angles of the V-network (see Figure 2) 15
Table 3 – Magnitudes and phase angles of the V-network (see Figure 3) 16
Table 4 – Values of minimum isolation for V-networks 22
Table 5 – Characteristics of the AAN for the measurement of asymmetric disturbance voltage 33
Table 6 – Characteristics of artificial networks for coaxial and other screened cables 35
Table 7 – Electrical parameters of the CDNE-X 41
Table A.1 – Component values of 50 Ω/50 μH + 5 Ω V-network 45
Table A.2 – Component values of 50 Ω/50 μH V-network 46
Table A.3 – Component values of 50 Ω/5 μH + 1 Ω V-network 47
Table A.4 – Component values of the 150 Ω V-network 48
Table A.5 – Component values of the 150 Ω delta-network 49

AVA Documents
Document Sharing Hub
Full document details: CISPR 16-1-2 2014 RLV

INTERNATIONAL ELECTROTECHNICAL COMMISSION
INTERNATIONAL SPECIAL COMMITTEE ON RADIO INTERFERENCE

SPECIFICATION FOR RADIO DISTURBANCE AND IMMUNITY MEASURING APPARATUS AND METHODS –

Part 1-2: Radio disturbance and immunity measuring apparatus – ~~Ancillary equipment – Conducted disturbances~~ Coupling devices for conducted disturbance measurements

FOREWORD

1) The International Electrotechnical Commission (IEC) is a worldwide organization for standardization comprising all national electrotechnical committees (IEC National Committees). The object of IEC is to promote international co-operation on all questions concerning standardization in the electrical and electronic fields. To this end and in addition to other activities, IEC publishes International Standards, Technical Specifications, Technical Reports, Publicly Available Specifications (PAS) and Guides (hereafter referred to as "IEC Publication(s)"). Their preparation is entrusted to technical committees; any IEC National Committee interested in the subject dealt with may participate in this preparatory work. International, governmental and non-governmental organizations liaising with the IEC also participate in this preparation. IEC collaborates closely with the International Organization for Standardization (ISO) in accordance with conditions determined by agreement between the two organizations.
2) The formal decisions or agreements of IEC on technical matters express, as nearly as possible, an international consensus of opinion on the relevant subjects since each technical committee has representation from all interested IEC National Committees.
3) IEC Publications have the form of recommendations for international use and are accepted by IEC National Committees in that sense. While all reasonable efforts are made to ensure that the technical content of IEC Publications is accurate, IEC cannot be held responsible for the way in which they are used or for any misinterpretation by any end user.
4) In order to promote international uniformity, IEC National Committees undertake to apply IEC Publications transparently to the maximum extent possible in their national and regional publications. Any divergence between any IEC Publication and the corresponding national or regional publication shall be clearly indicated in the latter.
5) IEC provides no marking procedure to indicate its approval and cannot be rendered responsible for any equipment declared to be in conformity with an IEC Publication.
6) All users should ensure that they have the latest edition of this publication.
7) No liability shall attach to IEC or its directors, employees, servants or agents including individual experts and members of its technical committees and IEC National Committees for any personal injury, property damage or other damage of any nature whatsoever, whether direct or indirect, or for costs (including legal fees) and expenses arising out of the publication, use of, or reliance upon, this IEC Publication or any other IEC Publications.
8) Attention is drawn to the Normative references cited in this publication. Use of the referenced publications is indispensable for the correct application of this publication.
9) Attention is drawn to the possibility that some of the elements of this IEC Publication may be the subject of patent rights. IEC shall not be held responsible for identifying any or all such patent rights.

This redline version of the official IEC Standard allows the user to identify the changes made to the previous edition. A vertical bar appears in the margin wherever a change has been made. Additions are in green text, deletions are in strikethrough red text.

AVA Documents
Document Sharing Hub

Full document details: CISPR 16-1-2 2014 RLV

International Standard CISPR 16-1-2 has been prepared by subcommittee A: Radio-interference measurements and statistical methods, of IEC technical committee CISPR: International special committee on radio interference.

This second edition cancels and replaces the first edition published in 2003 and its Amendment 1 (2004) and Amendment 2 (2006). This edition constitutes a technical revision.

This edition includes the following significant technical changes with respect to the previous edition:

a) requirements from CISPR 22 for the AAN have been copied to this standard;

b) the CDNE for measurement of disturbance voltage in the frequency range 30 MHz to 300 MHz is added;

c) additional maintenance is included.

It has the status of a basic EMC publication in accordance with IEC Guide 107, *Electromagnetic compatibility – Guide to the drafting of electromagnetic compatibility publications.*

The text of this standard is based on the following documents:

FDIS	Report on voting
CISPR/A/1051/FDIS	CISPR/A/1059/RVD

Full information on the voting for the approval of this standard can be found in the report on voting indicated in the above table.

A list of all parts of CISPR 16 series, under the general title *Specification for radio disturbance and immunity measuring apparatus and methods*, can be found on the IEC website.

This publication has been drafted in accordance with the ISO/IEC Directives, Part 2.

The committee has decided that the contents of this publication will remain unchanged until the stability date indicated on the IEC web site under "http://webstore.iec.ch" in the data related to the specific publication. At this date, the publication will be

- reconfirmed,
- withdrawn,
- replaced by a revised edition, or
- amended.

IMPORTANT – The 'colour inside' logo on the cover page of this publication indicates that it contains colours which are considered to be useful for the correct understanding of its contents. Users should therefore print this document using a colour printer.

Documents
Document Sharing Hub

Full document details: CISPR 16-1-2 2014 RLV

SPECIFICATION FOR RADIO DISTURBANCE AND IMMUNITY MEASURING APPARATUS AND METHODS –

Part 1-2: Radio disturbance and immunity measuring apparatus – ~~Ancillary equipment – Conducted disturbances~~ Coupling devices for conducted disturbance measurements

1 Scope

This part of the CISPR 16 series~~ is designated a basic standard, which~~ specifies the characteristics and performance of equipment for the measurement of radio disturbance voltages and currents in the frequency range 9 kHz to 1 GHz.

NOTE In accordance with IEC Guide 107, CISPR 16 is a basic EMC standard for use by product committees of the IEC. As stated in Guide 107, product committees are responsible for determining the applicability of the EMC standard. CISPR and its sub-committees are prepared to co-operate with product committees in the evaluation of the value of particular EMC tests for specific products.

Specifications for ancillary apparatus are included for artificial mains networks, current and voltage probes and coupling units for current injection on cables.

It is intended that the requirements of this publication~~ shall be complied with~~ are fulfilled at all frequencies and for all levels of radio disturbance voltages and currents within the CISPR indicating range of the measuring equipment.

Methods of measurement are covered in the CISPR 16-2 series, and further information on radio disturbance is given in CISPR 16-3, while uncertainties, statistics and limit modelling are covered in the CISPR 16-4 series.

2 Normative references

The following documents, in whole or in part, are normatively referenced in this document and are indispensable for its application. For dated references, only the edition cited applies. For undated references, the latest edition of the referenced document (including any amendments) applies.

~~CISPR 14-1:2000, *Electromagnetic compatibility – Requirements for household appliances, electric tools and similar apparatus – Part 1: Emission*~~

CISPR 16-1-1:~~2003~~2010, *Specification for radio disturbance and immunity measuring apparatus and methods – Part 1-1: Radio disturbance and immunity measuring apparatus – Measuring apparatus*

CISPR 16-2-1:~~2003~~2014, *Specification for radio disturbance and immunity measuring apparatus and methods – Part 2-1: Methods of measurement of disturbances and immunity – Conducted disturbance measurements*

~~CISPR 16-3:2003, *Specification for radio disturbance and Immunity measuring apparatus and methods – Part 3: CISPR Technical reports*~~

~~CISPR 16-4-1:2003, *Specification for radio disturbance and immunity measuring apparatus and methods – Part 4-1: Uncertainties, statistics and limit modelling – Uncertainties in standardized EMC tests*~~

Documents
Document Sharing Hub
Full document details: CISPR 16-1-2 2014 RLV

CISPR 16-4-2:~~2003~~2011, *Specification for radio disturbance and immunity measuring apparatus and methods – Part 4-2: Uncertainties, statistics and limit modelling – Measurement instrumentation uncertainty*

IEC 60050 (all parts), *International Electrotechnical Vocabulary* (available at <http://www.electropedia.org>)

~~IEC 60050(161):1990, International Electrotechnical Vocabulary *(IEV) – Chapter 161: Electromagnetic compatibility*~~

IEC 61000-4-6:2008, *Electromagnetic compatibility (EMC) – Part 4-6: Testing and measurement techniques – Immunity to conducted disturbances, induced by radio-frequency fields*

~~*International Vocabulary of Basic and General Terms in Metrology*, International Organization for Standardization, Geneva, 2nd edition, 1993~~

3 Terms, definitions and abbreviations

3.1 Terms and definitions

For the purposes of this document, the terms and definitions given in IEC 60050, as well as the following apply. ~~Also see IEC 60050(161).~~

3.1.1
ancillary equipment
transducers connected to a measuring receiver or (test) signal generator and used in the disturbance signal transfer between the EUT and the measuring or test equipment

Note 1 to entry: Examples of transducers are current and voltage probes and artificial networks.

3.1.2
associated equipment
AE
apparatus that is not part of the system under test but is required for the functioning of the EUT

3.1.3
asymmetric voltage
radio-frequency disturbance voltage appearing between the electrical mid-point of the mains terminals and ground, sometimes called the common mode voltage ~~and is half the vector sum of *Va* and *Vb*, i.e., (*Va* + *Vb*)/2~~

Note 1 to entry: If Va is the vector voltage between one of the mains terminals and ground, and Vb is the vector voltage between the other mains terminal and ground, the asymmetric voltage is half the vector sum of Va and Vb, i.e. (Va, Vb)/2.

3.1.4
symmetric voltage
radio-frequency disturbance voltage appearing between the two wires in a two-wire circuit, such as a single-phase mains supply, sometimes called the differential mode voltage ~~. If *Va* is the vector voltage between one of the mains terminals and earth and *Vb* is the vector voltage between the other mains terminal and earth,~~

Note 1 to entry: The symmetric voltage is the vector difference ($V_a - V_b$).

Documents
Document Sharing Hub
Full document details: CISPR 16-1-2 2014 RLV

3.1.5
unsymmetric voltage
amplitude of the vector voltage, V_a or V_b defined in 3.1.3 and 3.1.4

Note 1 to entry: The unsymmetric voltage is the voltage measured by the use of an artificial mains V-network.

Note 2 to entry: See notes in 3.1.3 and 3.1.4 for details on V_a and V_b.

3.1.6
artificial mains network
AMN
network that provides a defined impedance to the EUT at radio frequencies, couples the disturbance voltage to the measuring receiver, and decouples the test circuit from the supply mains

Note 1 to entry: There are two basic types of this network, the V-network (V-AMN) which couple the unsymmetric voltages, and the delta-network (Δ-AMN), which couple the symmetric and the unsymmetric voltages separately.

Note 2 to entry: The terms line impedance stabilization network (LISN) and V-AMN are used interchangeably .

3.1.7
asymmetric artificial network
AAN
network used to measure (or inject) asymmetric (common mode) voltages on unshielded symmetric signal (e.g. telecommunication) lines while rejecting the symmetric (differential mode) signal

Note 1 to entry: The term "Y-network" is a synonym for AAN.

~~**3.5**~~
~~**impedance stabilization network (ISN)**~~
~~generally an artificial network that provides a stabilized impedance to the EUT; often (e.g. in CISPR 22) used as a synonym for AAN~~

3.1.8
auxiliary equipment
AuxEq
peripheral equipment that is part of the system under test

3.1.9
coupling/decoupling network
CDN
artificial network for the measurement or injection of signals on one circuit while preventing signals from being measured or injected on another circuit

3.1.10
CDNE-*X*
coupling/decoupling network for emission measurement in the frequency range 30 MHz to 300 MHz; where the "*X*" suffix can be "M2" for unscreened two-wire mains, DC or control ports, "M3" for unscreened three-wire mains, DC or control ports, and "S*x*" for screened cable with *x* internal wires

Note 1 to entry: See Annex J for further details on the CDNE-*X*.

Documents
Document Sharing Hub
Full document details: CISPR 16-1-2 2014 RLV

3.1.11
equipment under test
EUT
equipment (devices, appliances and systems) subjected to EMC (emission) compliance tests

3.1.12
impedance measurement adaptor
IMA
metallic vertical plane, 0,1 m by 0,1 m, bonded to the reference ground plane, which contains connection ports for a network analyzer and a CDNE

3.1.13
longitudinal conversion loss
LCL
in a one- or two-port network, a measure of the degree of unwanted transverse (symmetric mode) signal produced at the terminals of the network due to the presence of a longitudinal (asymmetric mode) signal on the connecting leads

Note 1 to entry: LCL is a ratio expressed in dB.

[SOURCE: ITU-T Recommendation O.9 [8] [1)]]

3.1.14
reference ground plane
RGP
flat conductive surface that is used as a common reference and that allows a defined parasitic capacitance to the surroundings of an EUT

Note 1 to entry: A reference ground plane is needed for conducted emission measurements, and serves as reference ground for the measurement of unsymmetrical and asymmetrical disturbance voltages.

3.2 Abbreviations

The following are abbreviations used in this standard that are not already provided in 3.1.

AN	Artificial network
CVP	Capacitive voltage probe
E.m.f.	Electromotive force
ISN	Impedance stabilization network
ITE	Information technology equipment
LCL	Longitudinal conversion loss
NWA	Network analyser
PE	Protective earth
RF	Radio frequency

1) Numbers in square brackets refer to the Bibliography.

Documents
Document Sharing Hub
Full document details: CISPR 16-1-2 2014 RLV

4 Artificial mains networks

4.1 General

An artificial mains network is required to provide a defined impedance at radio frequencies at the terminals of the EUT, to isolate the test circuit from unwanted radio-frequency signals on the supply mains, and to couple the disturbance voltage to the measuring receiver.

There are two basic types of AMN, the V-network AMN (V-AMN), which couples the unsymmetric voltages, and the delta-network AMN (Δ-AMN), which couples the symmetric and the asymmetric voltages separately.

For each mains conductor, there are three terminals: the mains terminal for connection to the supply mains, the equipment terminal for connection to the EUT, and the disturbance output terminal for connection to the measuring equipment.

NOTE 1 Examples of circuits of AMNs are given in Annex A.

NOTE 2 This clause specifies impedance and isolation requirements for the AMN including the corresponding measurement methods. Some background and rationale on the AMN related uncertainties are given in 6.2.3 of CISPR/TR 16-4-1:2009 and in CISPR 16-4-2.

~~4.1 Network impedance~~

4.2 AMN impedance

The specification of the impedance of an AMN includes the magnitude and the phase of the impedance measured at an EUT terminal with respect to the reference ground, when the~~corresponding disturbance output terminal~~ receiver port is terminated with 50 Ω.

The impedance at the EUT terminals of the AMN defines the termination impedance presented to the EUT. For this reason, when a disturbance output terminal is not connected to the measuring receiver, it shall be terminated by 50 Ω. To assure accurate termination into 50 Ω of the receiver port, a 10 dB attenuator shall be used either inside or external to the network, the VSWR of which (seen from either side) shall be less than or equal to 1,2 to 1. The attenuation shall be included in the measurement of the voltage division factor (see 4.11).

The impedance~~ of~~ between each conductor (except PE) of the~~ mains conductors of the network~~ EUT terminal and the reference ground shall comply with the provisions of 4.3, 4.4, 4.5, 4.6 or 4.7, as appropriate, for any value of external impedance, including a short circuit~~ or the RF filter described in 4.7,~~ connected between the corresponding mains terminal and reference ground. This requirement shall be met at all temperatures which the network may reach under normal conditions for continuous currents up to the specified maximum. The requirement shall also be met for peak currents up to the specified maximum.

Where the phase requirement cannot be met, the measured phase angles shall be taken into account in the uncertainty budget according to CISPR 16-4-2. Annex I gives guidelines for the calculation of the uncertainty contribution of the phase if the tolerance is exceeded.

NOTE Because EUT connectors are not optimized for radio frequencies up to 30 MHz, the measurement of the network impedance is carried out with special measurement adaptors to enable short-length connections. The OSM (open/short/matched) calibration of the network analyzer is used to characterize the adaptors, taking the insertion loss and the conductor lengths of the adaptors into account.

Documents
Document Sharing Hub
Full document details: CISPR 16-1-2 2014 RLV

~~4.2~~4.3 50 Ω/50 μH + 5 Ω artificial mains V-network (V-AMN) for use in the frequency range 9 kHz to 150 kHz

The AMN shall have the impedance (magnitude and phase) versus frequency characteristic shown in Table 1 and Figure 1 in the relevant frequency range. Tolerances of ± 20 % for the magnitude and ± 11,5° for the phase are permitted.

Table 1 – Magnitudes and phase angles of the V-network (see Figure 1)

Frequency MHz	Impedance magnitude Ω	Phase angle Degrees
0,009	5,22	26,55
0,015	6,22	38,41
0,020	7,25	44,97
0,025	8,38	49,39
0,030	9,56	52,33
0,040	11,99	55,43
0,050	14,41	56,40
0,060	16,77	56,23
0,070	19,04	55,40
0,080	21,19	54,19
0,090	23,22	52,77
0,100	25,11	51,22
0,150	32,72	43,35

NOTE ~~This network may be constructed such that it can~~ If this AMN meets the combined impedance requirements of 4.3 and 4.4, it can be used in the frequency range 150 kHz to 30 MHz as well.

Documents
Document Sharing Hub
Full document details: CISPR 16-1-2 2014 RLV

~~4.34.4~~ 50 Ω/50 μH artificial mains V-network (V-AMN) for use in the frequency range 0,15 MHz to 30 MHz

The AMN shall have the impedance (magnitude and phase) versus the frequency characteristic shown in Table 2 and Figure 2 in the relevant frequency range. Tolerances of ± 20 % for the magnitude and ± 11,5° for the phase are permitted.

Table 2 – Magnitudes and phase angles of the V-network (see Figure 2)

Frequency MHz	Impedance magnitude Ω	Phase angle Degrees
0,15	34,29	46,70
0,17	36,50	43,11
0,20	39,12	38,51
0,25	42,18	32,48
0,30	44,17	27,95
0,35	45,52	24,45
0,40	46,46	21,70
0,50	47,65	17,66
0,60	48,33	14,86
0,70	48,76	12,81
0,80	49,04	11,25
0,90	49,24	10,03
1,00	49,38	9,04
1,20	49,57	7,56
1,50	49,72	6,06
2,00	49,84	4,55
2,50	49,90	3,64
3,00	49,93	3,04
4,00	49,96	2,28
5,00	49,98	1,82
7,00	49,99	1,30
10,00	49,99	0,91
15,00	50,00	0,61
20,00	50,00	0,46
30,00	50,00	0,30

~~NOTE The 50 Ω/50 μH + 5 Ω artificial mains V-network of 4.2 may also meet the impedance requirement of this subclause.~~

Documents
Document Sharing Hub

Full document details: CISPR 16-1-2 2014 RLV

~~4.44.5~~ 50 Ω/5 μH + 1 Ω artificial mains V-network (V-AMN) for use in the frequency range 150 kHz to ~~100~~ 108 MHz

The AMN shall have the impedance (magnitude and phase) versus the frequency characteristic shown in Table 3 and Figure 3. Tolerances of ± 20 % for the magnitude and ± 11,5° for the phase are permitted.

Table 3 – Magnitudes and phase angles of the V-network (see Figure 3)

Frequency MHz	Impedance magnitude Ω	Phase angle Degrees
0,15	4,70	72,74
0,20	6,19	73,93
0,30	9,14	73,47
0,40	12,00	71,61
0,50	14,75	69,24
0,70	19,82	64,07
1,00	26,24	56,54
1,50	33,94	46,05
2,00	38,83	38,15
2,50	41,94	32,27
3,00	43,98	27,81
4,00	46,33	21,63
5,00	47,56	17,62
7,00	48,71	12,80
10,00	49,35	9,04
15,00	49,71	6,06
20,00	49,84	4,55
30,00	49,93	3,04
50,00	49,97	1,82
100,00	49,99	0,91
108,00	49,99	0,84

Documents
Document Sharing Hub
Full document details: CISPR 16-1-2 2014 RLV

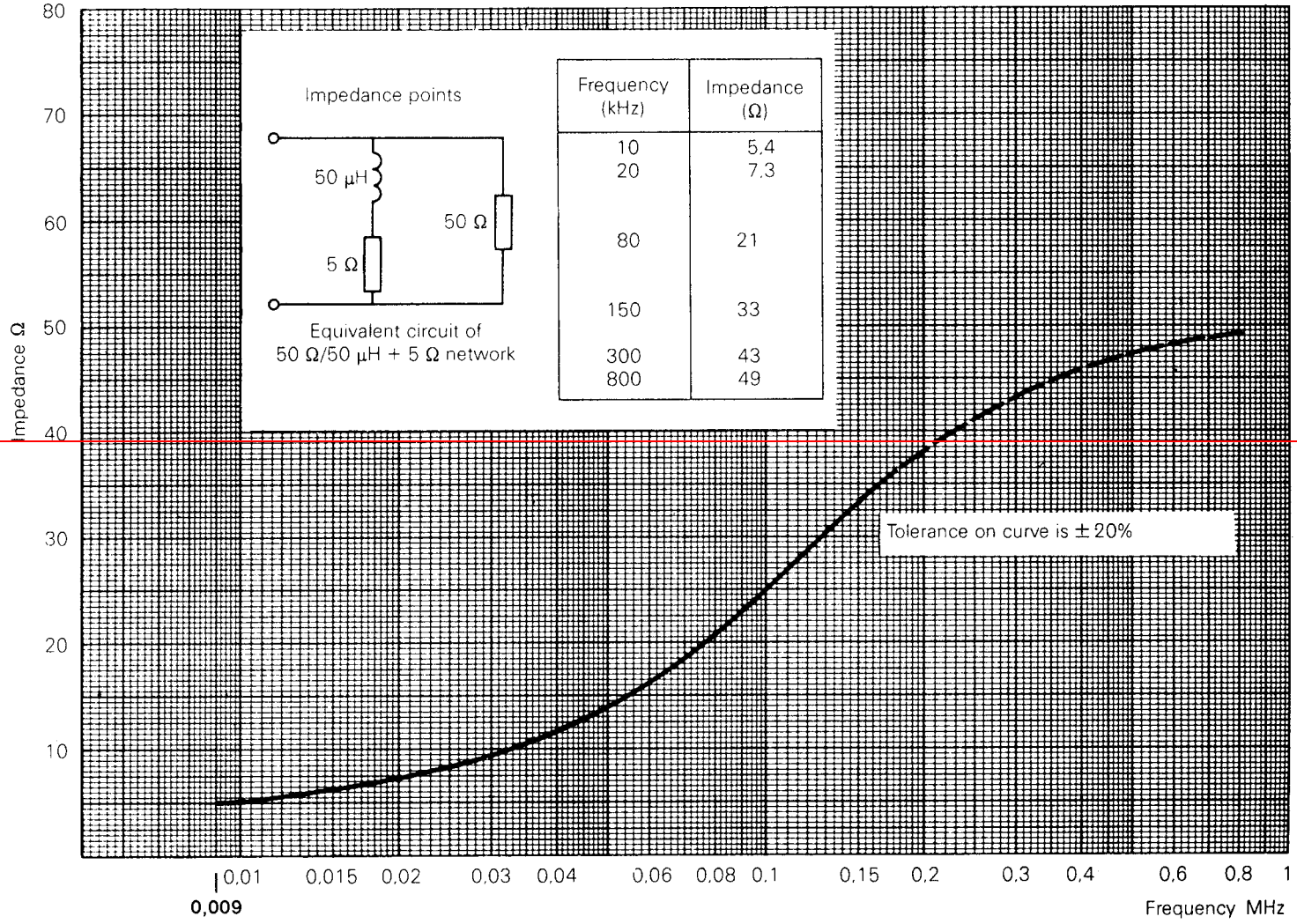

Frequency (kHz)	Impedance (Ω)
10	5,4
20	7,3
80	21
150	33
300	43
800	49

~~Figure 1a – Impedance of artificial mains network for band A (see 4.2)~~

Documents
Document Sharing Hub
Full document details: CISPR 16-1-2 2014 RLV

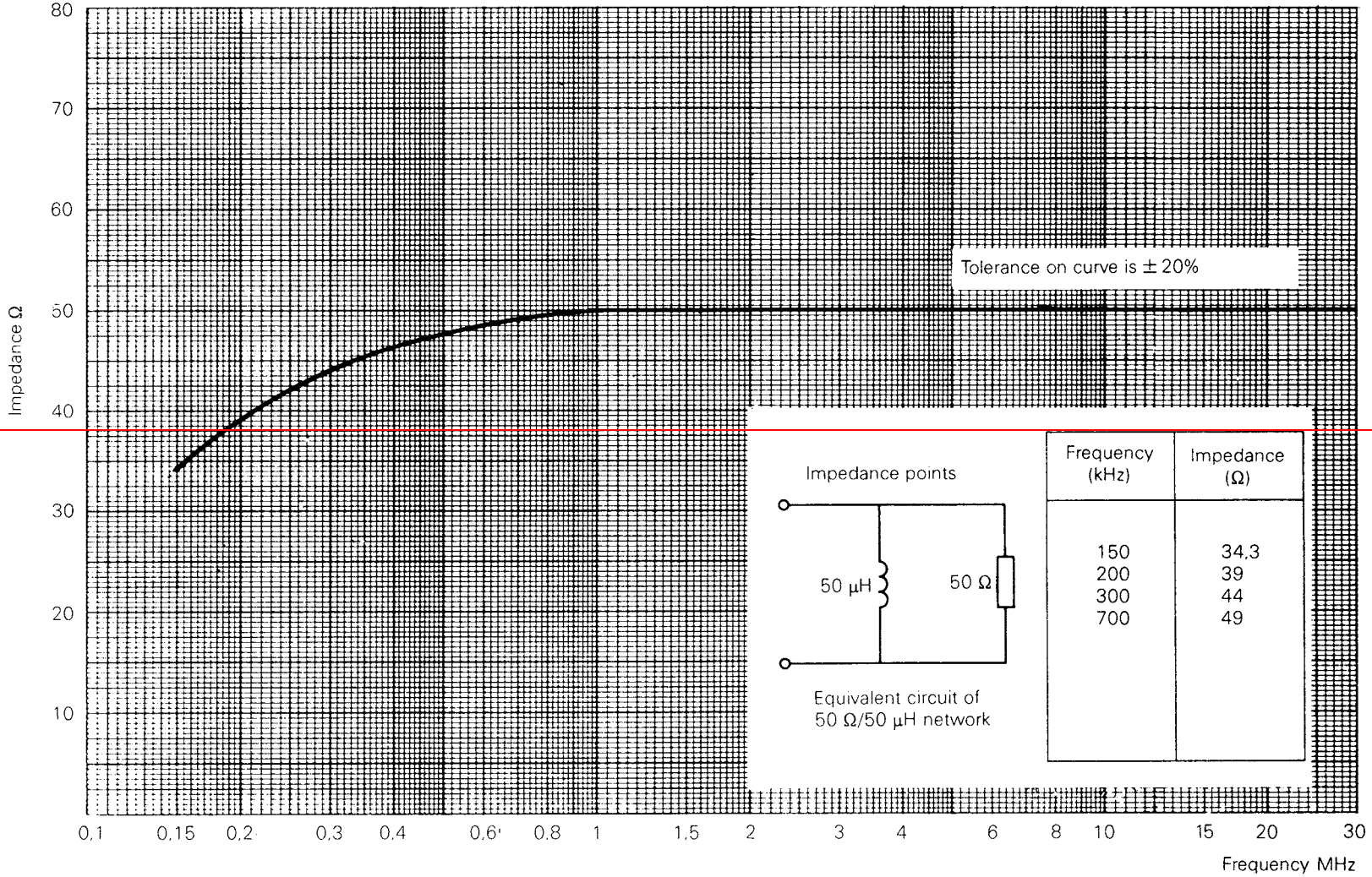

~~Figure 1b – Impedance of artificial mains network for band B (see 4.3)~~

Documents
Document Sharing Hub
Full document details: CISPR 16-1-2 2014 RLV

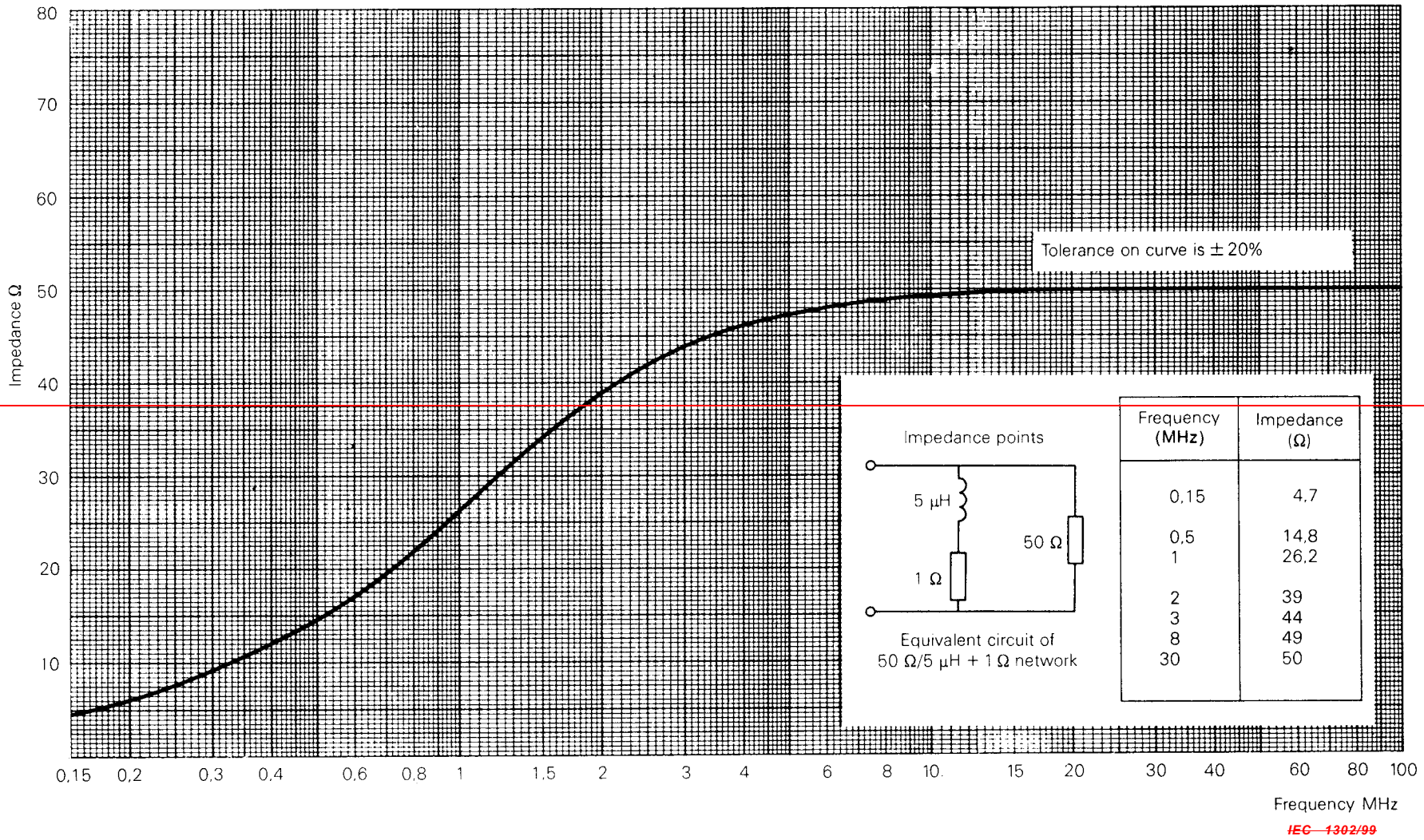

Frequency (MHz)	Impedance (Ω)
0,15	4,7
0,5	14,8
1	26,2
2	39
3	44
8	49
30	50

~~**Figure 2 – Impedance of artificial mains network for band B, 0,15 MHz to 30 MHz or band C, 30 MHz to 100 MHz (see 4.4)**~~

Documents
Document Sharing Hub
Full document details: CISPR 16-1-2 2014 RLV

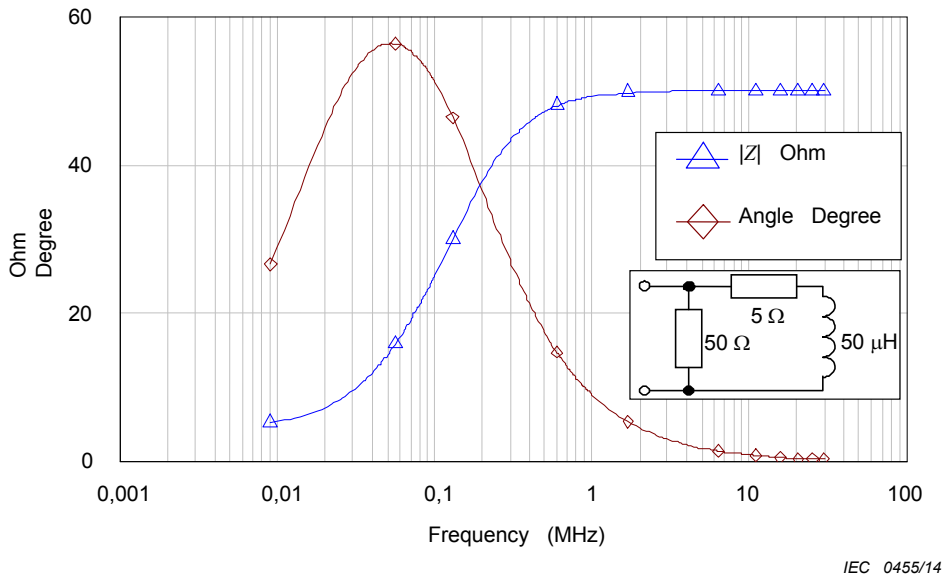

Figure 1 – Impedance (magnitude and phase) of the V-network for Band A (see 4.3, the relevant frequency range is from 9 kHz to 150 kHz)

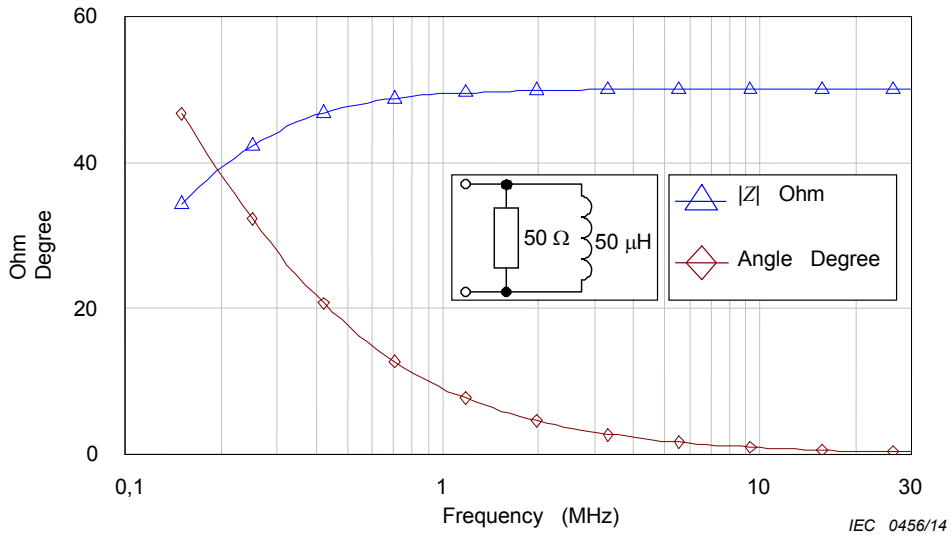

Figure 2 – Impedance (magnitude and phase) of the V-network for Band B (see 4.4)

Documents
Document Sharing Hub
Full document details: CISPR 16-1-2 2014 RLV

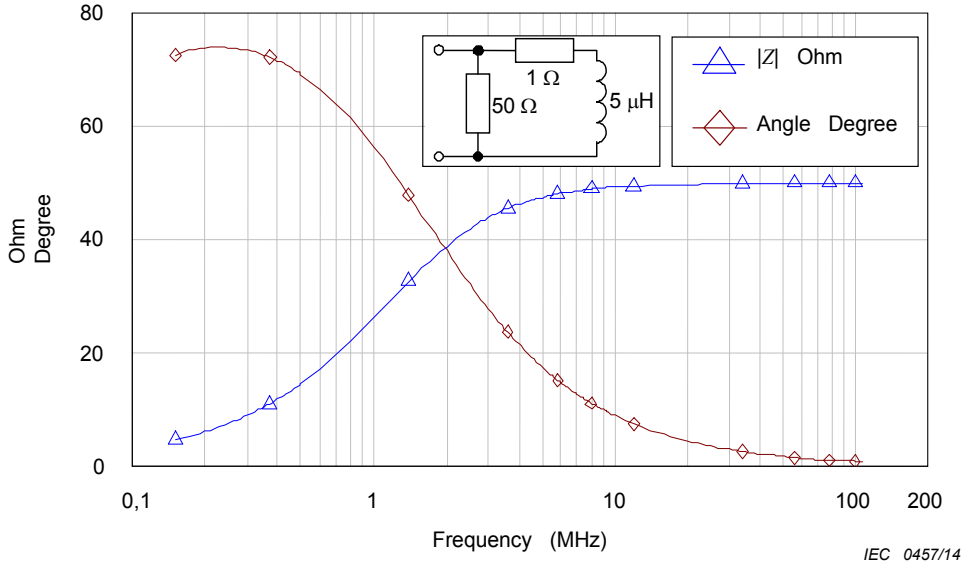

Figure 3 – Impedance (magnitude and phase) of the V-network for Bands B and C (from 150 kHz to 108 MHz; see 4.5)

~~4.5~~4.6 150 Ω artificial mains V-network (V-AMN) for use in the frequency range 150 kHz to 30 MHz

The network shall have an impedance of magnitude (150 ± 20) Ω with a phase angle not exceeding 20°.

~~4.6~~4.7 150 Ω artificial mains delta-network (Δ-AMN) for use in the frequency range 150 kHz to 30 MHz

4.7.1 General parameters

The network shall have an impedance of magnitude (150 ± 20) Ω with a phase angle not exceeding 20°, both between the equipment terminals and between the two equipment terminals joined together and the reference ground.

For the measurement of the symmetric voltage, a screened and balanced transformer is required. To avoid appreciable modification of the impedance of the network, the input impedance of the transformer shall be not less than 1 000 Ω at all frequencies concerned. The voltage measured by the measuring receiver depends on the network component values and the transformer ratio. The network shall be calibrated.

~~4.6.1~~4.7.2 Balance of the 150 Ω artificial mains delta-network

The balance of the system comprising the network and the measuring receiver connected thereto via the transformer shall be such that the measurement of symmetric voltage shall be substantially unaffected by the presence of an asymmetric voltage. The balance shall be measured using the circuit shown in Figure 4.

Documents
Document Sharing Hub
Full document details: CISPR 16-1-2 2014 RLV

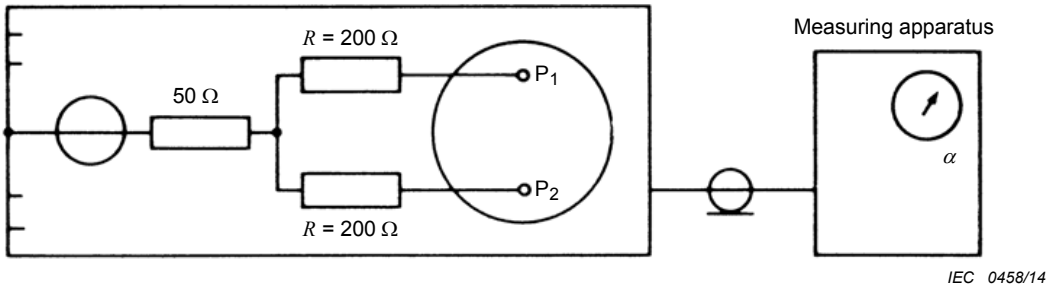

R	are resistors of 200 Ω equal to each other within 1 %
P_1 and P_2	are terminals of network for connection of device

Figure ~~3~~ 4 – Method for checking the balance of the arrangement for the measurement of symmetrical voltages

A voltage ~~U_a~~ V_a is injected from a generator having an internal impedance of 50 Ω, between reference ground and the common point of two resistors each 200 Ω ± 1 %. The other end of these resistors is connected to the equipment terminals of the AMN.

A voltage ~~U_s~~ V_s is measured in the position for symmetric voltage measurement. The ratio ~~U_a/U_s~~ V_a/V_s shall be greater than 20:1 (26 dB).

~~4.7~~4.8 Isolation

4.8.1 Requirement

~~To ensure that at any test frequency unwanted signals existing on the supply mains do not affect the measurement, an additional RF low-pass filter may be required, inserted between the artificial mains network and the supply mains. With this filter inserted, the impedance requirements given in 4.2, 4.3, 4.4, 4.5, and 4.6 shall be met. The components forming this filter shall be enclosed in a metallic screen directly connected to the reference earth of the measuring system.~~

To ensure that at any test frequency, unwanted signals existing on the mains side and the unknown impedance of the supply mains do not affect the measurement, a minimum isolation (decoupling factor) between each mains terminal and the receiver port for a given termination of the relevant terminal of the EUT port shall be met. See Table 4. The requirement applies to the V-AMN itself excluding additional external cables and filters.

Additional filtering external to the AMN may be required for the suppression of disturbance on the mains port (see CISPR 16-2-1 for practical requirements).

Table 4 – Values of minimum isolation for V-networks

Subclause	Type of V-network	Frequency range MHz	Minimum isolation dB
4.3	50 Ω /50μH + 5 Ω	0,009 to 0,05	0 to 40[a]
		0,05 to 30	40
4.4	50 Ω /50 μH	0,15 to 30	40
4.5	50 Ω /5 μH + 1 Ω	0,15 to 3	0 to 40[a]
		3 to 108	40
[a] These values indicate that the minimum isolation rises linearly with the logarithm of frequency			

Documents
Document Sharing Hub
Full document details: CISPR 16-1-2 2014 RLV

4.8.2 Measurement procedure

The test setup is shown in Figure H.1. For the measurement, first a signal V_1 is measured across a load impedance of 50 Ω with a source impedance of 50 Ω. Then this signal source shall be connected between the relevant mains terminal and reference ground, the relevant EUT terminals shall be terminated with 50 Ω, and the output voltage V_2 shall be measured at the receiver port (terminated with an impedance of 50 Ω). The attenuation of the 10 dB attenuator described in 4.2 shall be added to the isolation requirement. The isolation requirement shall be met for all mains and EUT terminals. If the termination of the other mains terminals affects the measurement result, then the requirement shall be met with the other mains terminals open and shorted.

The following equation shall be met:

$$V_1 - V_2 \geq F_D + A \qquad (1)$$

where

V_1 is the reference voltage at the mains terminals in dB(μV);

V_2 is the output voltage at the receiver port in dB(μV);

F_D is the minimum isolation (decoupling factor) requirement in dB;

A is the attenuation of the built-in attenuator in dB.

NOTE Because EUT connectors are not optimized for radio frequencies up to 30 MHz, the measurement of the network isolation are carried out with special measurement adaptors to enable short-length connections. The measurement of V_1 is made with the adaptor connected to the source.

~~4.8~~4.9 Current carrying capacity and series voltage drop

The maximum continuous currents and the maximum peak current shall be specified. The voltage applied to the EUT when passing continuous currents up to the maximum shall be not less than 95 % of the mains voltage at the mains terminals of the AMN.

~~4.9~~4.10 Modified reference ground connection

The measurement of some types of equipment may require the insertion of an impedance in the reference ground conductor in the AMNs in 4.3 and 4.4, following the requirements of the related product publications. This is inserted at point *X* marked in the reference ground lead in Figures 5 and 6, respectively. The impedance to be inserted is either a 1,6 mH inductor, or an impedance conforming to the impedance requirement of 4.3 or 4.4, as appropriate for the frequency range.

NOTE ~~For safety reasons, the 5 Ω resistor mentioned in 4.2 should be omitted.~~ When considering the frequency range 9 kHz to 150 kHz, for safety reasons the 5 Ω resistor of the artificial mains V-network is not inserted.

Documents
Document Sharing Hub
Full document details: CISPR 16-1-2 2014 RLV

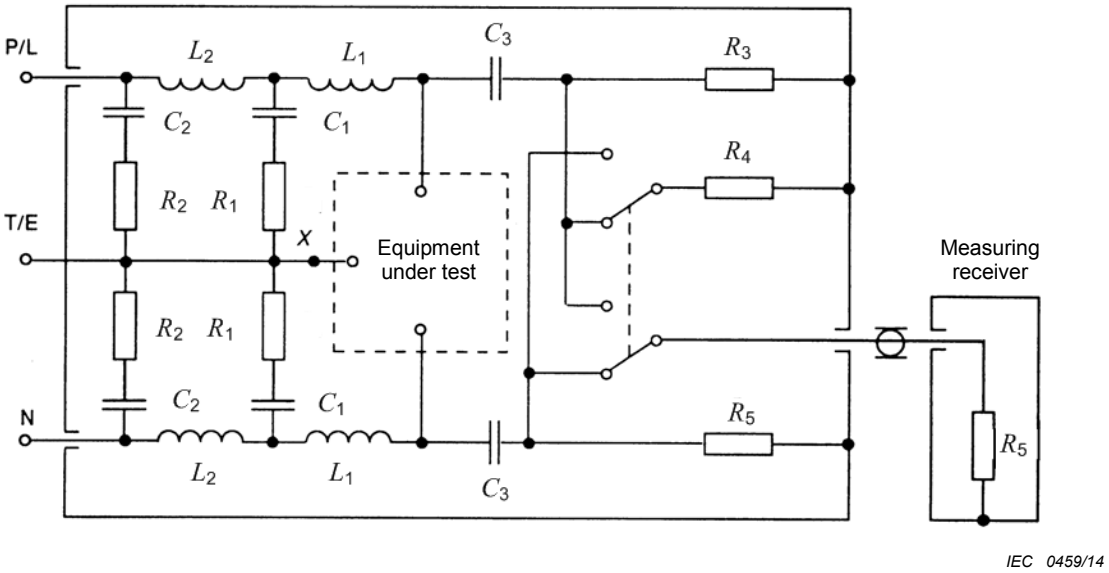

Figure ~~4~~ 5 – Example of artificial mains 50 Ω/50 µH + 5 Ω V-network (see 4.3 and A.2)

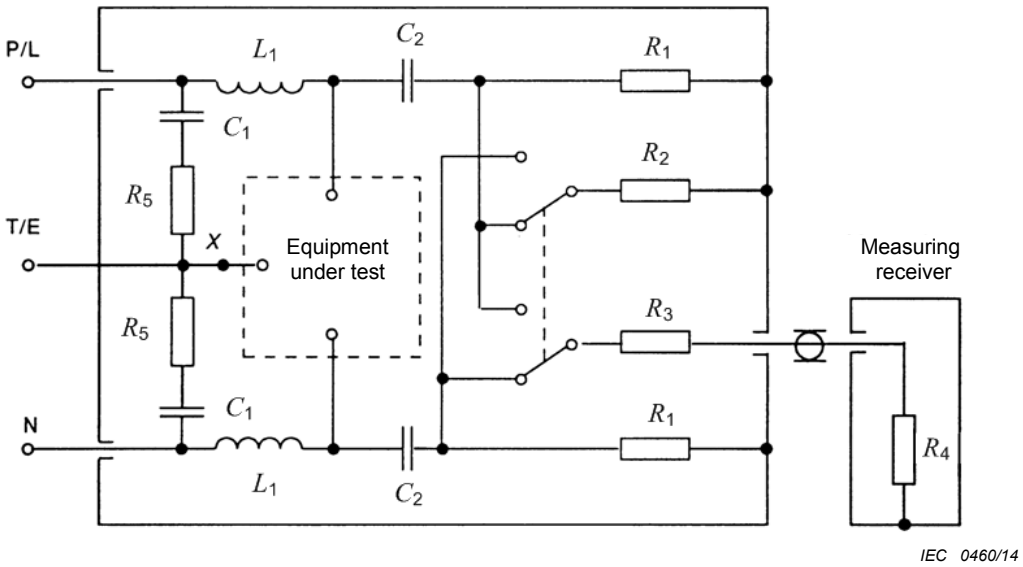

Figure ~~5~~ 6 – Example of artificial mains V-networks, 50 Ω/50 µH, 50 Ω /5 µH + 1 Ω or 150 Ω (see 4.4, 4.5, 4.6, A.3, A.4 and A.5, respectively)

~~4.10~~4.11 Measurement of the voltage division factor of artificial mains V-networks

The voltage division factor between the EUT port of the V-network and the RF output port shall be measured and taken into consideration during the measurement of the disturbance voltage. A procedure to measure the voltage division factor is contained in A.8.

Documents
Document Sharing Hub
Full document details: CISPR 16-1-2 2014 RLV

5 Current and voltage probes

5.1 Current probes

5.1.1 General

The asymmetrical disturbance currents of cables can be measured, without making direct conductive contact with the source conductor and without modification of its circuit, by use of specially developed clamp-on current transformers. The utility of this method is self-evident; complex wiring systems, electronic circuits, etc., may be measured without interruption of the normal operation or configuration. The current probe is constructed so that it may be conveniently clamped around the conductor to be measured. The conductor represents a one-turn primary winding. The secondary winding is contained within the current probe.

Current probes can be constructed for measurements in the frequency range 30 Hz to 1 000 MHz, although the primary measurement range is 30 Hz to 100 MHz. Beyond 100 MHz the standing currents in conventional power systems require that the current probe location be optimized for detection of the maximum current.

Current probes are designed to provide a flat frequency response over a passband. At frequencies below this flat passband, accurate measurements can still be made but with decreased sensitivity due to reduced transfer impedances. At frequencies above the flat passband, measurements are not accurate due to resonances in the current probe.

With an additional shielding structure, a current probe may be used to measure either the asymmetrical (common mode) or symmetrical (differential mode) current. Some construction details are provided in B.5.

~~5.1.1~~5.1.2 Construction

The current probe shall be constructed so as to enable the measurement of the current without disconnecting the lead under measurement.

Annex B contains some typical constructions of current probes.

~~5.1.2~~5.1.3 Characteristics

Insertion impedance	1 Ω impedance maximum
Transfer impedance	0,1 Ω to 5 Ω in the flat linear range; 0,001 Ω to 0,1 Ω below the flat linear range (current probe terminated into 50 Ω load)
	NOTE The reciprocal transfer admittance [in dB(S)] ~~may~~ can be used instead. When expressed in decibels, the admittance is added to the reading of the measuring receiver. For the calibration of the transfer impedance or admittance, ~~it may be necessary to use~~ a jig designed for the purpose is used. See Annex B.
Added shunt capacitance	Less than 25 pF between the current probe housing and measured conductor.
Frequency response	Transfer impedance is measured over a specified frequency range to calibrate the probe; the range of individual probes is typically 100 kHz to 100 MHz, 100 MHz to 300 MHz, and 200 MHz to 1 000 MHz.
Pulse response	Under consideration.

Documents
Document Sharing Hub
Full document details: CISPR 16-1-2 2014 RLV

Magnetic saturation	The maximum d.c. or a.c. mains current in the primary lead for a measurement error less than 1 dB shall be specified.
Transfer impedance tolerance	Under consideration.
Influence of external magnetic fields	40 dB reduction in indication when a current carrying conductor is removed from the current probe opening to a position adjacent to the probe.
Influence of electric fields	Not susceptible to fields < 10 V/m.
Influence of orientation	Less than 1 dB up to 30 MHz and 2,5 dB from 30 MHz to 1 000 MHz, when used on a conductor of any size placed anywhere inside the aperture.
Current probe opening	At least 15 mm.

5.2 Voltage probe

5.2.1 High impedance voltage probe

Figure 7 shows a circuit that is used to make voltage measurements between a mains conductor and the reference ground. The probe consists of a blocking capacitor C and a resistor, such that the total resistance between line and ground is 1 500 Ω. The probe may also be used to make measurements on other lines, and for certain applications its impedance may need to be increased to avoid excessive loading of high impedance circuits. An inductor may have to be connected across the input of the measuring apparatus, for safety reasons; its inductive ~~reactive, X_C, to~~ reactance, X_L, should be much greater than R.

Documents
Document Sharing Hub
Full document details: CISPR 16-1-2 2014 RLV

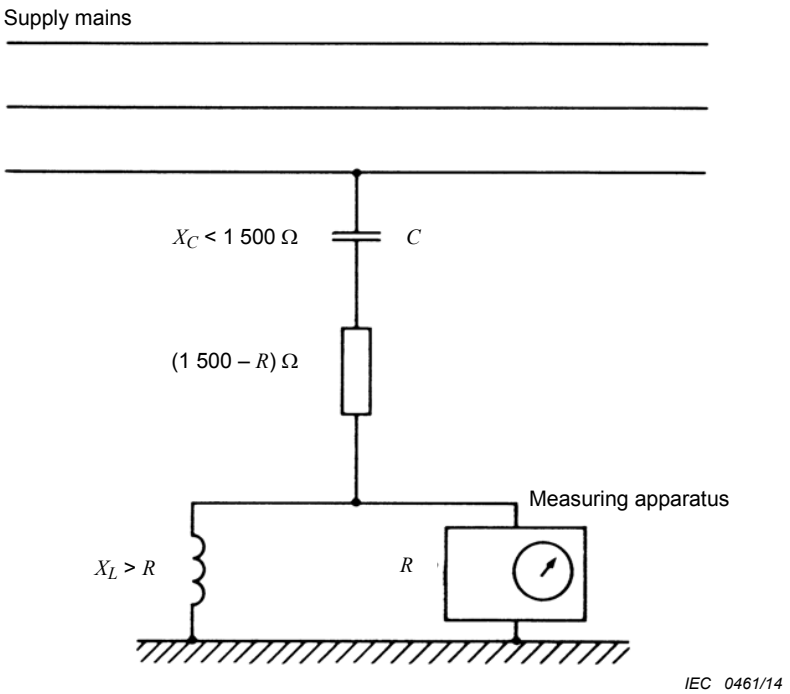

NOTE $V = \frac{1\,500}{R}$ ~~U~~ V_m

where

V is the disturbing voltage;

~~U~~ V_m is the voltage at the input of the measuring apparatus.

Figure ~~6~~ 7 – Circuit for RF voltage measurement on supply mains

~~The insertion loss~~ For calibration of voltage probes, the voltage division factor shall be measured in a 50 Ω system over the frequency range of 9 kHz to 30 MHz. The effect on the accuracy of measurement of any device that may be used for protection should either be less than 1 dB, or be allowed for in calibration. Care shall be taken to ensure that the level of disturbance is accurately measured in the presence of the ambient noise, to make the measurement meaningful.

The loop formed by the lead connected to the probe, the mains conductor tested and reference ground should be minimized, to reduce the effects of any strong magnetic fields.

5.2.2 Capacitive voltage probe

5.2.2.1 General

The asymmetrical disturbance voltages of cables can be measured without making direct conductive contact with the source conductor, and without modification of its circuit by the use of a clamp-on capacitive coupling device. The usefulness of this method is self-evident; complex wiring systems, electronic circuits, etc., may be measured without interruption of the normal operation or configuration of the EUT or the need to cut the cable to insert a measuring device. The capacitive voltage probe (CVP) is constructed so that it may be conveniently clamped around the conductor to be measured.

The CVP is used for measurements of conducted disturbances in the frequency range 150 kHz to 30 MHz with an almost flat frequency response in the frequency range of interest. The voltage division factor, which is defined as the ratio of the disturbance voltage on the cable to the input voltage at the measuring receiver, depends on the type of cable used.

Documents
Document Sharing Hub
Full document details: CISPR 16-1-2 2014 RLV

parameter should be calibrated over a specified frequency range for each cable type, using the method described in Annex G.

The CVP may need additional shielding to provide sufficient isolation from the asymmetrical (common mode) signal around the cable (see 5.2.2.3). Annex G contains an example of the construction and a method of measurement for the isolation.

This CVP can be used to measure the disturbances at telecommunication ports. The minimum measurable level is typically up to 44 dB(μV).

5.2.2.2 Construction

The CVP shall be constructed so as to enable the measurement of the voltage without disconnecting the cable under measurement. Figure 8 shows a circuit that is used to make voltage measurements between a cable and reference ground. The probe consists of a capacitive coupling clamp which is connected to a trans-impedance amplifier. The input resistance R_p of this amplifier shall be large enough compared to the reactance X_C to obtain a flat frequency response.

Annex G provides instructions for the typical construction and verification of the CVP.

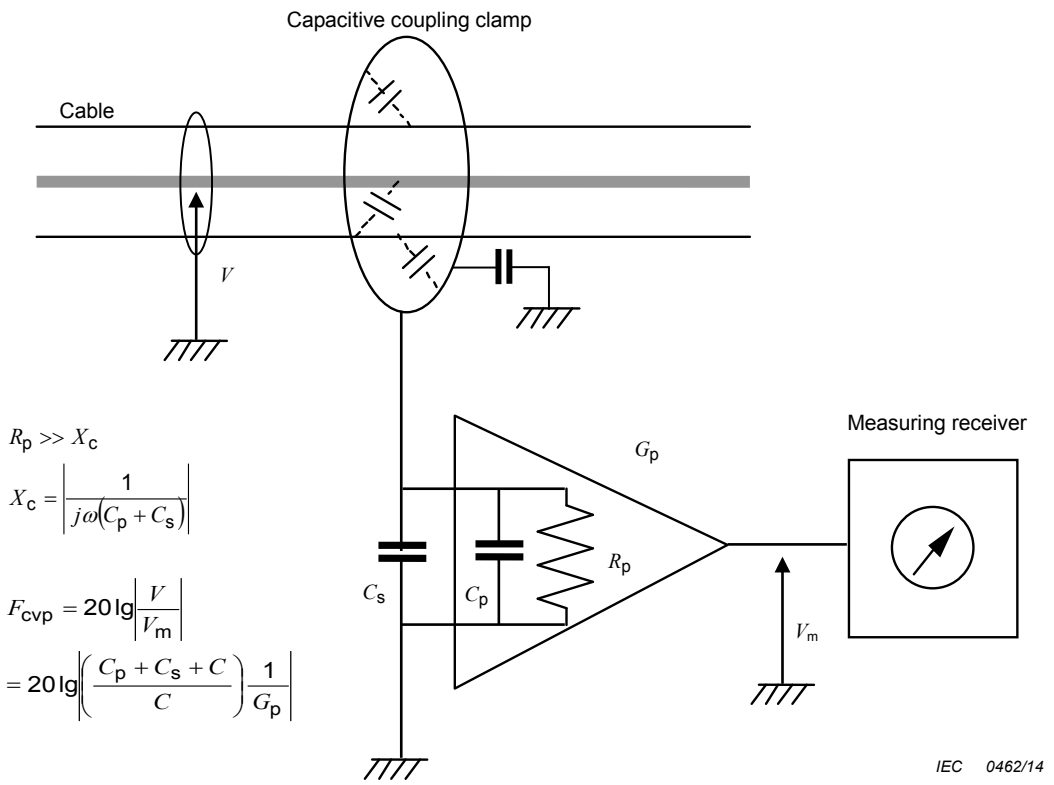

Key

C	Capacitance between cable and clamp
C_p	Capacitance of trans-impedance amplifier
C_s	Capacitance between probe and ground
F_{CVP}	Voltage division factor
G_p	Gain of trans-impedance amplifier
R_p	Resistance of trans-impedance amplifier
V	Disturbance voltage
V_m	Voltage at the input of the measuring receiver

Figure 8 – Circuit used to make voltage measurements between a cable and reference ground

AVA Documents Document Sharing Hub

5.2.2.3 Requirements

Added shunt capacitance	Less than 10 pF between the grounding terminal of CVP and the cable under test.
Frequency response	Voltage division factor, F_{CVP}= 20 lg|V/V_m| in dB (see Figure 8), is measured over a specified frequency range.
Pulse response	Maintain linearity for the pulse determined by the method in Annexes B and C of CISPR 16-1-1:2010 for Band B.
Influence of electric field (influence caused by electrostatic coupling with other cables near the probe)	The voltage indication is reduced by more than 20 dB when a cable is removed from the CVP. The measurement method is described in Annex G.
CVP aperture or opening [aperture when the two coaxial electrodes open at the slot (see Figure G.1)]	At least 30 mm.

6 Coupling units for conducted current immunity measurement

6.1 General

The coupling units are designed to inject the disturbance current on to the leads under test and to isolate the other leads and any apparatus which is connected to the EUT from the effects of these currents. With a 150 Ω source impedance, there is a useful correlation between the RF disturbance field strength acting on a real installation and the e.m.f. that ~~must be~~ is applied in the current injection method to produce the same degree of impairment, at least for frequencies up to 30 MHz. The immunity of an apparatus is expressed by this e.m.f. value. Annexes C and D give the principles of operation and examples of types of units and their construction.

~~6.1~~6.2 Characteristics

6.2.1 General

The performance checks of the coupling units are done for impedance in the frequency range 0,15 MHz to 30 MHz and for insertion loss in the frequency range 30 MHz to 150 MHz.

~~6.1.1~~6.2.2 Impedance

In the frequency range 0,15 MHz to 30 MHz, the total asymmetric impedance (RF choke coil in parallel with the 150 Ω resistive disturbance source impedance) measured between the point of injection of the disturbance signal to the EUT and the ground of the unit shall have a magnitude of 150 Ω ± 20 Ω and a phase angle less than ± 20° (this impedance is the same as the CISPR 150 Ω artificial mains V-network; see 4.5).

For example, for coupling units type A and S, the point of injection is the shield of the output connector; for types M and L, the point of injection is the joint output terminals.

~~6.1.2~~6.2.3 Insertion loss

In the frequency range 30 MHz to 150 MHz, the insertion loss of two identical coupling units in tandem shall be within the range 9,6 dB to 12,6 dB, measured as shown in Figure 9. The two units shall be connected together with very short wires (≤ 1 cm).

Documents
Document Sharing Hub
Full document details: CISPR 16-1-2 2014 RLV

The insertion loss U_G/U_B of two identical coupling units measured according to the setup of Figure 9 should be within 9,6 dB and 12,6 dB in the frequency range 30 MHz to 150 MHz; U_G is the reading of the receiver when the generator and receiver are directly connected together.

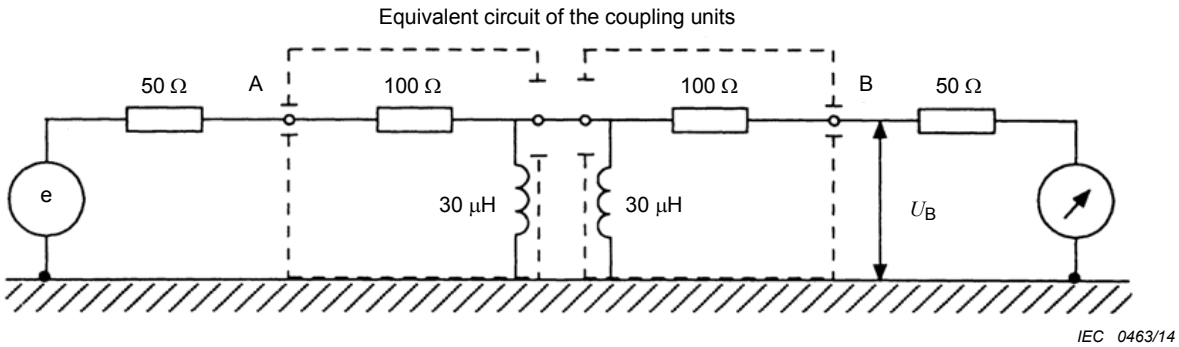

~~NOTE The two units shall be connected together with very short wires (≤1 cm).~~

Figure ~~7~~ 9 – Measuring set-up to check the insertion loss of the coupling units in the frequency range 30 MHz to 150 MHz

7 Coupling devices for measuring signal lines

7.1 General

The interference potential (and immunity) of signal lines may be assessed by measurement (or injection) of the conducted disturbance voltage or current. For this purpose, coupling devices are needed to measure the disturbance component while rejecting the intentional signal on the line. The devices included are to measure the electromagnetic emission and immunity (common and differential mode, current and voltage). Typical devices for these kinds of measurements are current probes and asymmetric artificial networks (AANs or Y-networks).

NOTE 1 Requirements for AANs for conducted immunity tests on signal lines ~~may~~ can be found in IEC 61000-4-6 (AANs are special versions of “coupling and decoupling devices” [so-called coupling/decoupling networks (CDNs)]). An AAN that meets the requirements for emission measurements may also meet the requirements for immunity testing.

NOTE 2 Signal lines include telecommunication lines and terminals of equipment intended to be connected to these lines.

NOTE 3 The terms “asymmetric voltage” and “common mode voltage” as well as “symmetric voltage” and “differential mode voltage” are synonyms, as defined in Clause 3.

NOTE 4 The term “asymmetric artificial network (AAN)” is used as synonym for “Y-network”, which is in contrast to V-networks and delta-networks. The T-network is a special version of the Y-network.

When a current probe is used and the limit value is specified in volts, the voltage value ~~must be~~ is divided by the impedance of the signal line or termination impedance, as specified by the detailed measurement procedure, to obtain the limit value for the current. This impedance may be common mode, as required by the detailed measurement procedure.

The specification for AANs is provided in 7.2. The differential mode to common mode rejection (V_{dm}/V_{cm}) is crucial to the usability of the AAN. This parameter is related to the longitudinal conversion loss (LCL). Examples of AANs and the required test and calibration procedures are given in Annex E.

Documents
Document Sharing Hub
Full document details: CISPR 16-1-2 2014 RLV

~~7.1~~7.2 Requirements for AANs (or Y-networks)

AANs are used to measure (or inject) asymmetric (common mode) voltages on unshielded symmetric signal (e.g. telecommunication) lines while rejecting the symmetric (differential mode) signal.

~~NOTE In CISPR 22 this type of network is called impedance stabilization network (ISN).~~

An AAN shall include the following properties when calibrated in accordance with the methods of Annex E. In addition, the attenuation distortion or other deterioration shall not affect the normal operation of the EUT.

a) AAN for measurements at ports intended for connection to category 6 (or better) unscreened balanced pair cables:

The variation of the longitudinal conversion loss (a_{LCL}) with frequency f (in MHz) shall be defined by the following equation:

$$a_{LCL} = 75 - 10\lg\left[1 + \left(\frac{f}{5}\right)^2\right]$$

$f < 2$ MHz: $a_{LCL} \leq \pm 3$ dB

2 MHz $\leq f \leq$ 30 MHz: $a_{LCL} \leq {}^{+6}_{-3}$ dB

b) AAN for measurements at ports intended for connection to category 5 (or better) unscreened balanced pair cables.

The variation of the longitudinal conversion loss (a_{LCL}) with frequency f (in MHz) shall be defined by the following equation:

$$a_{LCL} = 65 - 10\lg\left[1 + \left(\frac{f}{5}\right)^2\right]$$

$f < 2$ MHz: $a_{LCL} \leq \pm 3$ dB

2 MHz $\leq f \leq$ 30 MHz: $a_{LCL} \leq {}^{+4,5}_{-3}$ dB

c) AAN for measurements at ports intended for connection to category 3 (or better) unscreened balanced cables.

The variation of the longitudinal conversion loss (a_{LCL}) with frequency f (in MHz) shall be defined by the following equation:

$$a_{LCL} = 55 - 10\lg\left[1 + \left(\frac{f}{5}\right)^2\right] \text{ in dB}$$

$a_{LCL} \leq \pm 3$ dB

NOTE The above specifications of a_{LCL} versus frequency are approximations of a_{LCL} of typical unscreened balanced cables in representative environments. The specification in list item c) of 7.2 for category 3 cables is considered representative of the a_{LCL} of typical telecommunication access networks.

Figure 10 shows the general circuit diagram and graphical representation of a_{LCL} requirements for an AAN.

Documents
Document Sharing Hub
Full document details: CISPR 16-1-2 2014 RLV

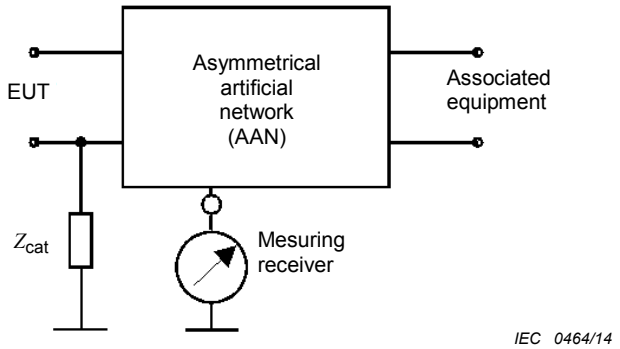

a) Principal circuit of the AAN (or Y-network) and its ports consisting of a basic highly symmetric network and an (optional) unbalanced network Z_{cat}

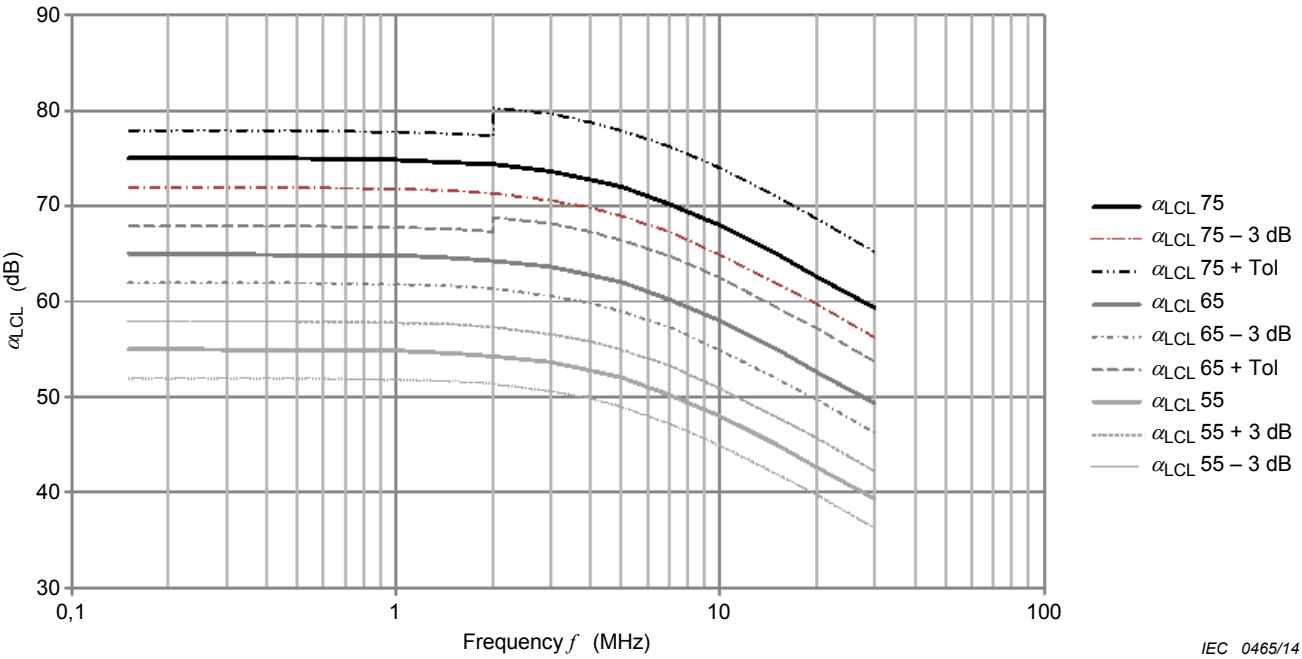

~~NOTE 1 The definition equation can e.g. be~~

~~$\pm$ *Tol* (in dB)~~

~~LCL_{lf} is the LCL at low frequencies, e.g. 50 dB,~~
~~f is the frequency,~~
~~f_{corner} is the corner frequency, e.g. 5 MHz, and~~
~~*Tol* is the LCL tolerance, e.g. 3 dB~~

~~NOTE 2 The ideal values for "50 dB", "60 dB" and "70 dB" are given as bold lines, whereas tolerance lines are drawn as thin lines.~~

NOTE 1 This graph is derived from the equations in 7.2, list items a), b), and c). The ideal values for 55 dB, 65 dB, and 75 dB are shown as bold lines, while tolerance values are shown above and below the ideal values.

NOTE 2 "Tol" is the tolerance specified in 7.2, list items a), b), and c).

b) Graph of requirements for a_{LCL} of the AAN (Y-network)

Figure ~~8~~ 10 – Principal circuit and ~~example~~ LCL requirements of an AAN

The characteristics of the AAN for the measurement of asymmetric (common mode) disturbances shall cover the frequency range of the asymmetric disturbance voltages, as well as the frequency range used for the transmission of the intentional signal. These characteristics are given in Table 5.

AVA Documents
Document Sharing Hub
Full document details: CISPR 16-1-2 2014 RLV

Table ~~1~~ 5 – Characteristics of the AAN for the measurement of asymmetric disturbance voltage

1)	**Termination impedance** of basic network for asymmetric disturbance voltage[a] • magnitude • phase	 150 Ω ± 20 Ω 0° ± 20°
2)	**Longitudinal conversion loss (LCL) at the EUT port** of the network[b]	(9 kHz to 150 kHz: to be defined); 0,15 MHz to 30 MHz: ~~defined by the relevant product standard, e.g. as shown in Figure 8b~~ depending on cable category as defined in 7.2[c]
3)	**Decoupling attenuation** for asymmetric signals between AE port and EUT port	(9 kHz to 150 kHz: to be defined) 0,15 MHz to 1,5 MHz: > 35 dB to 55 dB increasing linearly with the log of frequency > 1,5 MHz: > 55 dB
4)	**Insertion loss of the symmetric circuit** between EUT and AE ports	< 3 dB[d]
5)	**Voltage division factor of the asymmetric circuit** between EUT and measuring receiver ports, to be added to the reading of the measuring receiver	Typically 9,5 dB[e] ± 1 dB
6)	**Symmetric load impedance** of the network	Depending on the system specifications, e.g. 100 Ω or 600 Ω; to be defined by the relevant product standards[f]
7)	**Transmission bandwidth** for the intentional signal (analog or digital)	Depending on the system specifications for the symmetric insertion loss, e.g. up to 2 MHz or up to 100 MHz; to be defined by the relevant product standards
8)	**Frequency range**[~~h~~f] (1) Emission (2) Immunity	(0,009 MHz) 0,15 MHz to 30 MHz See e.g. ~~IEC 61000-4-6~~ CISPR 22 [5]

Documents
Document Sharing Hub
Full document details: CISPR 16-1-2 2014 RLV

a The asymmetric impedance of the AAN will normally be influenced by the addition of an unbalanced network Z_{cat} according to Figure 10 a). This standard specifies the impedance tolerance for the basic network. ~~If the influence of the unbalanced network on impedance and phase is negligible, the given tolerance may apply including the unbalanced network. If this is not the case~~ The unbalanced network for the AANs defined in list items a), b), and c) of 7.2 nominally changes the impedance by less than 10 Ω, and the phase by less than 10°, so the given tolerance applies including the unbalanced network. If a product standard specifies lower LCL values, e.g. if the unbalanced network changes the impedance nominally by more than 10 Ω, or the phase by more than 10°, the product standard shall take this into account when specifying tolerances for impedance and phase, because a certain tolerance should be left to the AAN manufacturer.

b Different concepts for determination of conformance of equipment are in use, i.e. use an LCL of the AAN higher than the available LCL values of signal lines, or use the LCL to simulate available telecommunication line categories. CISPR has decided to use the LCL to simulate the asymmetry of cable categories for emission tests, whereas IEC Sub-Committee 77B recommends the use of an LCL of the AAN higher than the cable category for immunity tests.

c ~~The values of LCL in Figure 8b have been taken – with modified tolerances – from a draft of the amendment to CISPR 22:1997. Other values may be defined by future product standards. Therefore the LCL requirements given in this publication are examples only.~~ Generally, three factors have to be considered for LCL tolerances: the residual LCL of the basic AAN, the deviation of the ~~unsymmetry~~ unbalanced network Z_{cat} from nominal, and the uncertainty of LCL measurement. The tolerances given in a product standard deviating from the values of 7.2 should take into account that acceptable tolerances should increase with the required LCL and with frequency. ~~Figure 8b shows an example of reasonable tolerances.~~

d The actual requirements will depend on the specifications of the transmission system. Some transmission systems allow insertion losses of up to 6 dB. The insertion loss caused by an AAN is dependent on source and load impedances of the whole symmetric circuit. For lower/higher impedances the insertion loss will be lower/higher, and should be given by the manufacturer, e.g. for 100 Ω impedance. In addition, it will be useful if manufacturers specify the phase characteristics of the AAN in its symmetric circuit.

e The AAN shall be calibrated by measuring the voltage division factor in a test set-up according to Figure E.6.

f More than one network may be used to cover the complete frequency range.

~~7.2~~7.3 Requirements for artificial networks for coaxial and other screened cables

Artificial networks (ANs) for coaxial and other screened cables are used to measure (or inject) unsymmetric (common mode) voltages on the shield of (e.g. telecommunication or RF) cables while passing the communication or RF signal through. The required characteristics are given in Table 6.

NOTE In CISPR 22 [5] this type of network is called coaxial or screened cable impedance stabilization network (ISN).

Documents
Document Sharing Hub
Full document details: CISPR 16-1-2 2014 RLV

Table ~~2~~ 6 – Characteristics of artificial networks for coaxial and other screened cables

1)	**Termination impedance** of basic network for unsymmetric disturbance voltage:[a] • magnitude • phase	 150 Ω ± 20 Ω 0° ± 20°
2)	**Decoupling attenuation**[b] for unsymmetric signals between AE port and EUT port.	(9 kHz to 150 kHz: to be defined) 0,15 MHz to 30 MHz: □40 dB
3)	**Insertion loss and transmission bandwidth** for the intentional (communication or r.f.) signal between EUT and AE ports, including **characteristic impedance(s)**	Defined by system requirements[c]
4)	**Voltage division factor of the unsymmetric circuit** between EUT and measuring receiver ports, to be added to the reading of the measuring receiver.	Typically 9,5 dB[d]
5)	**Frequency range** (1) Emission (2) Immunity	(0,009 MHz) 0,15 MHz to 30 MHz See e.g. IEC 61000-4-6

[a] The asymmetric impedance of the AN will be determined by the 150-Ω resistor in parallel with the choke and the capacitance of the bulkhead connector to ground.

[b] Since the coaxial cable shield at the AE port is directly connected to the AN metal case, the decoupling attenuation will not be a problem of the AN itself. The emission (or immunity) test set-up shall be such that the minimum decoupling attenuation can be guaranteed.

[c] Insertion loss and transmission bandwidth for the intentional (communication or RF) signal between EUT and AE ports as well as the characteristic impedances between shield and inner conductor(s) are not in the scope of this standard. They should be defined according to system requirements.

[d] The AN shall be calibrated by measuring the voltage division factor in a test set-up according to Figure F.2.

8 The artificial hand and series RC element

8.1 General

In some product specifications the artificial hand is required for EUTs which do not have an earth ground connected to the metallic parts of the EUT and which in normal use are hand-held. Housings of plastic with a conductive coating may also require the use of the artificial hand. The artificial hand is used in conducted emission tests in the frequency range of 150 ~~Hz~~ kHz to 30 MHz (the most critical frequencies are 5 MHz to 30 MHz) to simulate the influence of the operator's hands on the measurement results. The types of equipment to be evaluated with the artificial hand are: electric tools, household appliances, such as hand-held mixers, telephone handsets, joysticks, keyboards, etc.

8.2 Construction of the artificial hand and RC element

The artificial hand consists of a (strip of) metal foil of specified dimensions, which is placed on or wrapped around that part of the equipment normally touched by the user's hand, in a specific configuration, described as follows.

The metal foil is connected in a specific configuration to the reference point of the disturbance measuring system via an RC element consisting of a capacitor C = 220 pF ± 20 % in series with a resistor R = 510 Ω ± 10 %; see Figure 11 a).

The strips of metal foil used to simulate the influence of a user's hand around an equipment handle or an equipment body are typically 60 mm wide. In the case of a keyboard EUT, a metal foil, or more practically a metal plate of maximum dimensions 100 mm by 300 mm, may be placed on top of the keys. Examples are given in Figures 11 and 12.

AVA Documents Document Sharing Hub

Full document details: CISPR 16-1-2 2014 RLV

The lead length between the RC element and the metal foil shall be 1 m. If the test set-up requires a longer lead length, the total inductance of the lead shall be less than 1,4 μH if the frequency of measurement is near 30 MHz.

When considering the total effect of the interconnecting wires as a single wire in free space, the inductance L of the wire shall be less than 1,4 μH if the upper limit of the frequency range in the conducted emission test is 30 MHz. For a given single-wire length, this requirement allows calculating the minimum diameter d (in m) of the wires to be used by Equation (2):

$$L = \frac{\mu l}{2\pi}\left[\ln\left(\frac{4l}{d}\right) - 1\right] \quad \text{H} \tag{2}$$

where

μ = $4\pi \times 10^{-7}$ H/m;

l is the length of the wire in m;

d is the diameter of the wire in m.

NOTE When complying with the inductance requirement of 1,4 μH, the impedance of the RC network sufficiently dominates at 30 MHz.

8.3 The use of the artificial hand

The maximum length of wire between the RC element and the reference ground is generally met when the wire length does not exceed 1 m. The RC element may, for example, be placed either as close as possible to the metal foil, or as close as possible to the reference point. The correct choice largely depends on the (generally unknown) internal common mode impedance of the disturbance source in the presence of the metal foil, and the characteristic impedance of the transmission line formed by the connecting wire and its environment. If the upper frequency range of the emission measurements is limited to 30 MHz, the position of the RC element is not critical, and a practical position (also from a reproducibility point of view) of the RC element is inside the AMN or the LISN.

When the conducted emission at the mains port is measured, the reference point is the reference ground in the AMN. When this emission is measured on a signal or control line, the reference point is the reference ground of the ~~line impedance simulation network (LISN)~~ AN. The general principle to be followed in the application of the artificial hand is that terminal M of the RC element shall be connected to any exposed non-rotating metalwork and to metal foil wrapped around all handles, both fixed and detachable, supplied with the appliance. Metalwork which is covered with paint or lacquer is considered exposed metalwork and shall be directly connected to the RC element.

The following items specify the detailed application of an artificial hand:

a) When the housing of the appliance is constructed entirely of metal and is earth-grounded, an artificial hand is not required.

b) When the case of the appliance is constructed of insulating material, metal foil shall be wrapped around the handle B as in Figure 11 b) and c), and also around the second handle D, if present. Metal foil 60 mm wide shall also be wrapped around the body C, as in Figure 11 b) and c) at the point where the iron core of the motor stator is located; or around the gearbox, if the latter gives a higher disturbance level. All these pieces of metal foil, and the metal ring or bushing A, if present, shall be connected together, and to the terminal M of the RC element.

Documents
Document Sharing Hub
Full document details: CISPR 16-1-2 2014 RLV

c) When the case construction of the appliance is partly metal and partly insulating material, and has insulating handles, metal foil shall be wrapped around the handles B and D as in Figure 11 b). If the case is non-metallic at the location of the motor, a metal foil 60 mm wide shall be wrapped around the body C at the point where the iron core of the motor stator is located; or alternatively around the gearbox, if this is constructed of insulating loading material and a higher disturbance level is obtained. The metal part of the body, the point A, the metal foil around the handles B and D, and the metal foil on the body C, shall be connected together and to the terminal M of the RC element.

d) When a Class II appliance (i.e. double insulated, without ground wire) has two handles of insulating material A and B, and a case of metal C, for example an electric saw as in Figure 11 c), metal foil shall be wrapped around the handles A and B. The metal foil at A and B and the metal body C shall be connected together and to terminal M of the RC element.

e) Figure 12 gives examples for a telephone handset and a keyboard. For the handset, the 60 mm wide foil is wrapped around the handle with some overlap of the foil. In the case of a keyboard the foil or the PCB should fully cover the keys as far as possible. Using a PCB, the metal side has to be placed on the keyboard; it does not, however, need to exceed the dimensions of 300 mm by 100 mm.

Documents
Document Sharing Hub

Full document details: CISPR 16-1-2 2014 RLV

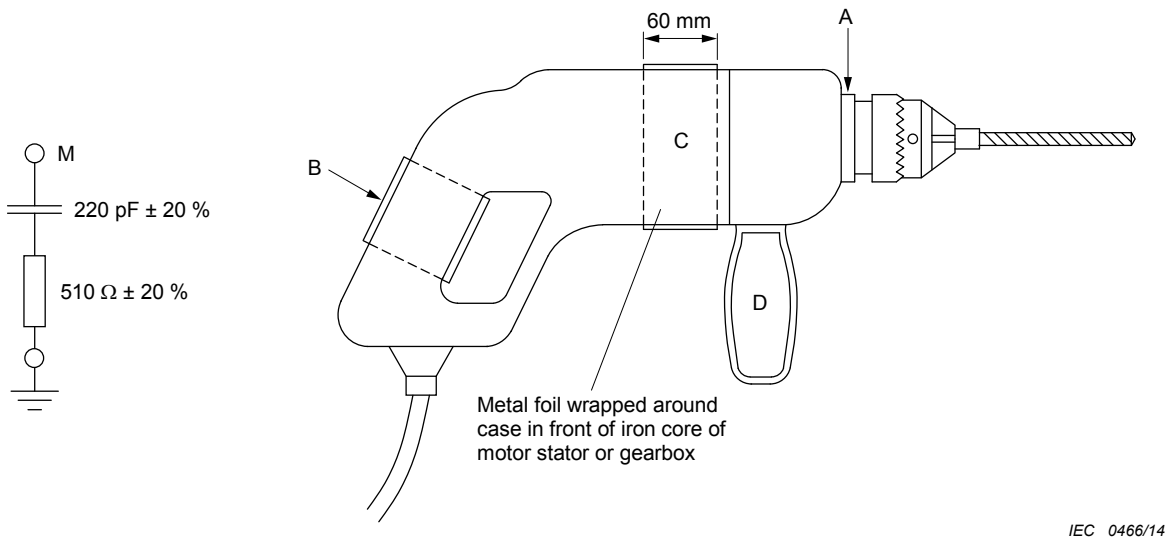

a) RC element **b) Portable electric drill**

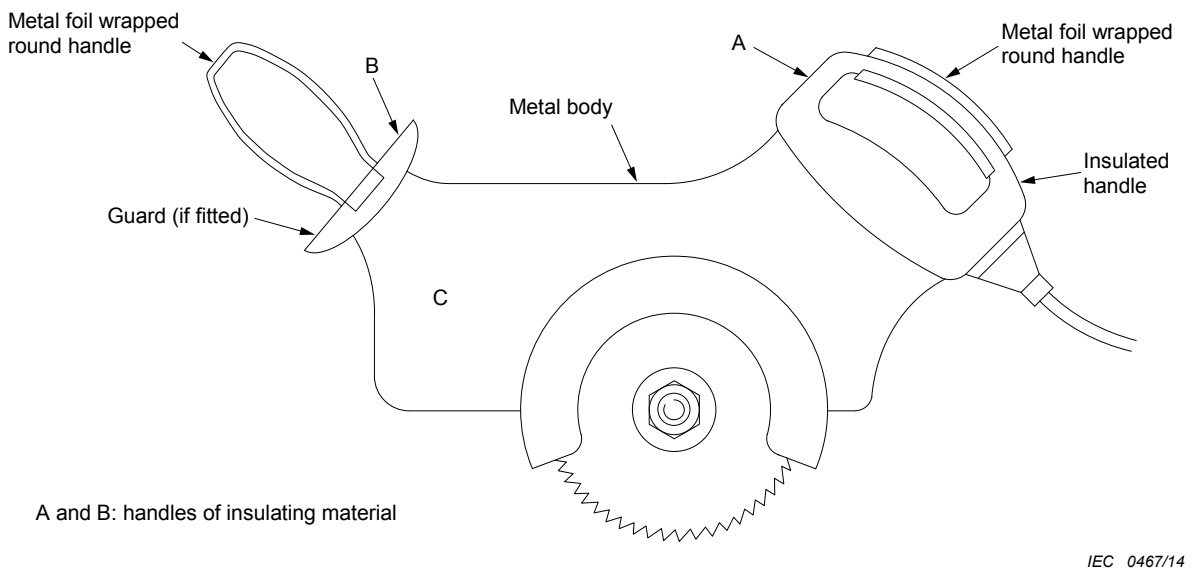

c) Portable electric saw

Figure ~~9~~11 – Application of the artificial hand

Documents
Document Sharing Hub
Full document details: CISPR 16-1-2 2014 RLV

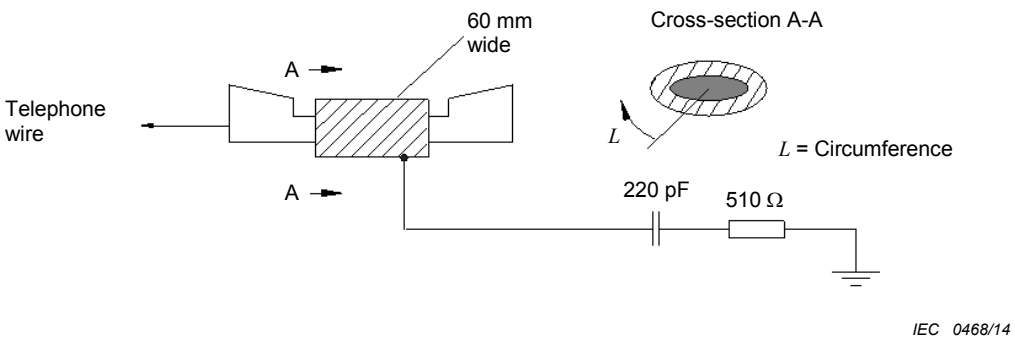

a) Application of artificial hand to telephone handset

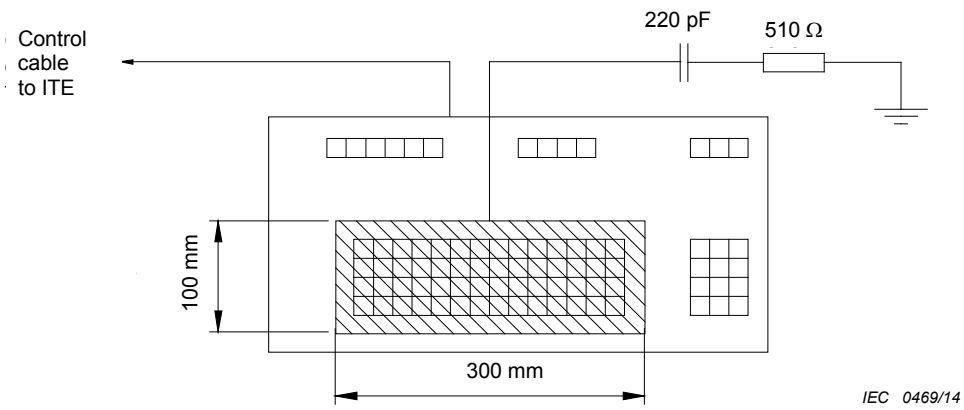

b) Application of artificial hand to typical keyboard

The artificial hand incorporates a metal foil, with the following dimensions:

a) 60 mm wide and greater than L in length:	for parts of the equipment that are hand-held during operation, or at a maximum of four parts of a system under test.
b) 300 mm by 100 mm:	for keyboards, whereby the metal foil is to be sized to cover the total number of keys, or to partially cover the keyboard, when the keyboard dimensions are greater than the maximum foil size.

Figure ~~10~~12 – Examples of application of artificial hand to ITE

9 CDNE for measurement of disturbance voltage in frequency range 30 MHz to 300 MHz

9.1 Instrumentation

9.1.1 General

The measurement method is described in Clause 9 of CISPR 16-2-1:2014.

The measurement method uses the following equipment:

– a CDNE-X and,
– an RGP.

The technical requirements for this equipment are described in this subclause.

Documents
Document Sharing Hub
Full document details: CISPR 16-1-2 2014 RLV

The CDNE couples asymmetric (common-mode) disturbance voltage from the EUT into the input lead of the measuring receiver, and decouples that lead from any emissions or influences present in the test environment. Any symmetric (differential-mode) disturbance coming from the EUT is loaded either by a symmetric impedance of 100 Ω at the EUT mains port (CDNE-M2 and CDNE-M3), or by the symmetric load at the AE port of the CDNE-Sx (see Annex J). The CDNE cannot be used for the measurement on mains lines which carry intentional symmetric (differential mode) signals.

The RGP is the reference for the measured asymmetric (common-mode) disturbance voltage.

9.1.2 Description of the CDNE measurement

9.1.2.1 Range of application

The CDNE is intended for the measurement of conducted disturbances in the frequency range from 30 MHz to 300 MHz from an electrically small EUT with one or two connected cables. Further the CDNE can be arranged between EUT and AE to decouple asymmetric disturbances from the AE and to stabilize the impedance.

NOTE An EUT is seen as electrically small if fulfils the conditions of 9.1 of CISPR 16-2-1:2014.

9.1.2.2 Measurement of disturbance voltage

The CDNE allows measurement of the asymmetric disturbance voltage V_{dis} generated by the EUT on the connected cable(s). This measurement takes into account the measuring receiver reading V_{meas} and the voltage division factor F_{CDNE}. The voltage division factor F_{CDNE} in dB, includes the internal attenuator a_{meas} of at least 6 dB, which is used to reduce the uncertainty contributed by the mismatch between the CDNE and the measuring receiver.

The result of the measurement is calculated as follows:

$$V_{\text{dis}} = V_{\text{meas}} + F_{\text{CDNE}} \text{ in dB(µV)} \quad (3)$$

9.1.2.3 Termination impedance of the CDNE

The internal impedance of the EUT at the connection point is generally unknown. For this reason both the reading and the reproducibility of the measurement results are highly dependent on the CDNE termination impedance. The asymmetric (common-mode) termination impedance was chosen to be 150 Ω, giving the lowest uncertainty contribution relative to the established test method.

The CDNE-M2 and CDNE-M3 for the mains port of the EUT provides a symmetric impedance of 100 Ω, which represents the symmetric impedance of most a.c. mains networks.

9.1.2.4 Decoupling attenuation of the CDNE

The unknown impedance of the AE and any emission from the AE can influence the measurement result. This influence can be reduced by using an asymmetric attenuation between the AE port and the EUT port. This asymmetric attenuation is typically realized with a choke.

9.1.3 Description of the RGP

The RGP serves as the reference for the measured asymmetric disturbance voltage. The set-up is placed on the RGP that is connected to the protective earth for safety of personnel and equipment. The CDNE is placed in direct contact (good electrical bonding) with this plane, to ensure that it meets the specification for the asymmetric impedance. The EUT is positioned at a defined distance above the RGP.

Documents
Document Sharing Hub
Full document details: CISPR 16-1-2 2014 RLV

9.2 Technical requirements for the CDNE-*X*

9.2.1 Mechanical and electrical parameters

The CDNE is contained in a metallic case. The centre of the CDNE EUT port is 30 mm $^{+10}_{0}$ mm above the RGP. This height allows for a typical impedance of 150 Ω for the connected cable.

For guidance, figures in Annex J provide examples of the construction of CDNEs.

Table 7 provides the electrical parameters and their specifications in the frequency range from 30 MHz to 300 MHz.

Table 7 – Electrical parameters of the CDNE-*X*

Parameter	Value for CDNE-M2 and CDNE-M3	Value for CDNE-S*x*
Asymmetric (common-mode) impedance Z_{CM} at the EUT port	150 Ω $^{+10}_{-20}$ Ω Phase angle: 0° ± 25°	150 Ω $^{+10}_{-20}$ Ω Phase angle: 0° ± 25°
Symmetric (differential-mode) impedance Z_{DM} at the EUT port	100 Ω ± 20 Ω	not defined
Longitudinal conversion loss (LCL)	≥ 20 dB	not defined
Tolerance of the voltage division factor F_{CDNE} including a_{meas}	± 1,5 dB	± 1,5 dB
Decoupling attenuation a_{decoup}	> 30 dB	> 30 dB

In general the level of asymmetric voltage is higher than the level of unintentional symmetric voltage. Therefore a minimum LCL value of 20 dB is adequate to prevent any influences of the symmetric voltage on the measurement results. In contrast, the assessment of EUTs using the differential-mode for communication on unscreened leads requires specific LCL values (minimum and maximum value) of the CDNE.

NOTE 1 For the EUT port of CDNE-M3, the minimum LCL value is not defined for L and PE, or N and PE.

NOTE 2 Reproducible LCL measurements above 100 MHz are under consideration.

NOTE 3 The CDNE cannot be used for applications on a mains network with intentional differential mode signals, e.g. where transmitting of a wanted differential signal would require a specific LCL, minimum and maximum value, to take the network quality into account.

The attenuation a_{meas} at the receiver port is used to reduce the measurement uncertainty contributed by the mismatch between the CDNE and the measuring receiver. This attenuation is preferably an internal component of the CDNE. If an external attenuator is used, it shall be directly mounted on the CDNE receiver port, and this attenuator needs to be present during calibration and measurement. The attenuation of a_{meas} should be at least 6 dB.

9.2.2 Validation of the CDNE

9.2.2.1 General requirements

For the validation measurement, the CDNE shall be placed on an RGP, and its enclosure bonded to this RGP.

All measurements of the asymmetrical voltage refer to this RGP. The measurement arrangement shall be as specified in Figure 7 of Clause 10 of IEC 61000-4-6:2008, and is shown in Figure 13 with a different reference point of Z_{CE} in front of the EUT port.

Documents
Document Sharing Hub

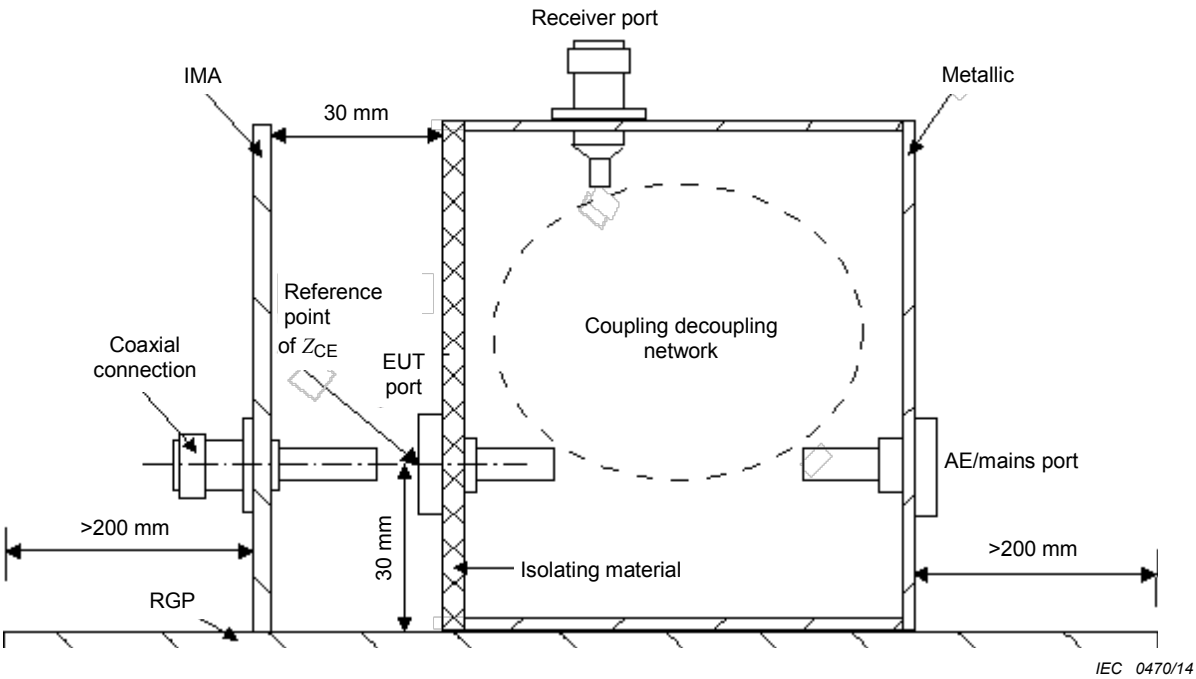

NOTE "AE/mains" can include a.c. mains, d.c. supply as well as control/communication lines.

Figure 13 – Arrangement for validation of a CDNE

9.2.2.2 Calibration of the network analyzer (NWA) at the reference point

For the measurement of the asymmetric impedance at the reference point of Z_{CE} in Figure 13, the following calibration procedure shall be used:

The effect of the measurement cable (between the IMA and the NWA) is taken into account by calibrating the NWA using the OPEN-, SHORT-, and MATCH-error-correction method. The next step requires connection of the IMA with the previously calibrated cable to the NWA. The other side of the IMA shall be fitted with a connection plate including all adaptor parts that are between the IMA and CDNE during the measurement of the asymmetric impedance and phase angle (see Figure 14). Excluded are all parts that will be inserted into the connectors of the CDNE. This arrangement takes into account the electrical load between the calibrated cable and the measurement point at the input of the CDNE.

The electrical length shall be corrected by a delay time, which may be adjusted automatically or manually depending on the measurement equipment used.

Documents
Document Sharing Hub
Full document details: CISPR 16-1-2 2014 RLV

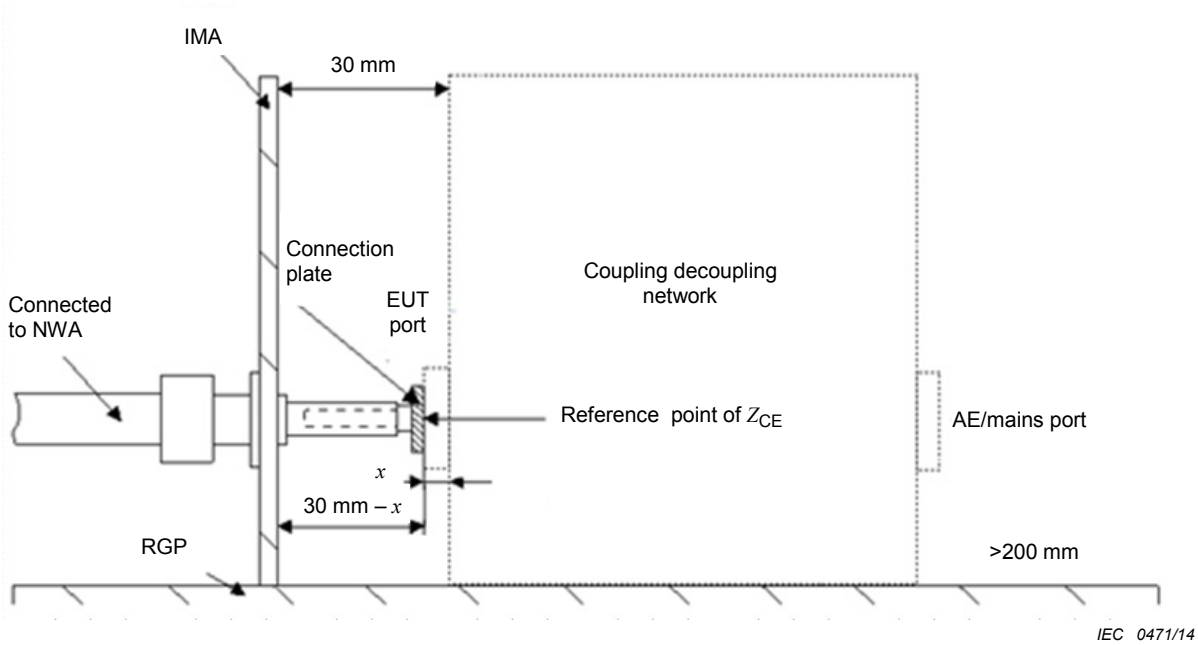

The length x is related to the design of the EUT port connector and shall be as short as possible. Safety banana connectors have a typical x value of 3 mm.

The coupling decoupling network is not part of the set-up and is shown only for the positioning of the connection plate.

This set-up requires a connection plate without any parts that will be inserted into the connectors of the EUT port. In principle the connection plate will be upgraded to a asymmetric-mode adaptor (electrical connection between IMA and all lines of the EUT port) for the measurement of the asymmetric impedance and phase angle.

Figure 14 – IMA arrangement for correcting the electrical length

9.2.2.3 Asymmetric impedance Z_{CM}

The asymmetric impedance Z_{CM} at the CDNE EUT port shall be measured with the arrangement provided in Figure E.2.

9.2.2.4 Symmetric impedance of Z_{DM}

The symmetric impedance Z_{DM} at the CDNE-M2 and CDNE-M3 EUT port shall be measured according to Figure 15. The test arrangement with the low capacitance balun shall be calibrated using a 50 Ω network analyzer with OPEN, SHORT, and MATCH using 100 Ω on the symmetric port of the balun. The reflection coefficient ρ shall then be determined after connecting the CDNE to the symmetric port of the balun.

Documents
Document Sharing Hub
Full document details: CISPR 16-1-2 2014 RLV

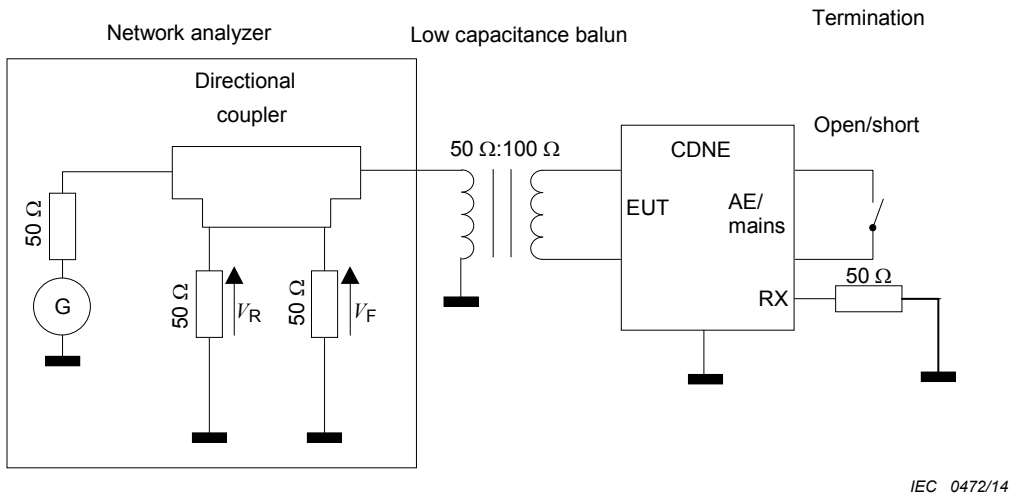

NOTE "AE/mains" can include AC mains, DC supply as well as control/communication lines.

Figure 15 – Test arrangement for the measurement of the symmetric impedance (Z_{DM})

The symmetric impedance shall be calculated according to Equation (4) or will be displayed on the network analyzer.

$$Z_{DM} = Z_0 \frac{1+\rho}{1-\rho} = Z_0 \frac{1+(V_R/V_F)}{1-(V_R/V_F)} \tag{4}$$

where ρ is the reflection coefficient and Z_0 is 100 Ω.

9.2.2.5 Voltage division factor

The voltage division factor F_{CDNE} of the CDNE is measured according to Figure E.6.

NOTE 1 For this measurement, F_{CDNE} is the same as the term a_{vdiv} used in Figure E.6.

NOTE 2 The generator impedance of 150 Ω is typically accomplished with an additional 100 Ω impedance in series with the generator impedance. Because of the frequency range, this additional 100 Ω is described by S-parameters that are used for the specification of the voltage at the CDNE input.

9.2.2.6 Decoupling attenuation

The decoupling attenuation a_{decoup} of the CDNE is measured using the set-up as shown in Figure E.4. For a CDNE with two or more wires, all wire ports shall be measured between the EUT port and the AE port.

NOTE For this measurement, F_{CDNE} is the same as the term a_{vdiv} used in Figure E.6.

9.2.2.7 LCL

The LCL of the CDNE is measured according to Annex E.

9.3 Technical requirement for the RGP

The only requirement for the metallic RGP is for size and its arrangement in the environment. The RGP shall be at least 0,2 m larger at each side than the area determined by the test set-up comprising the CDNE and EUT. The surface of the RGP shall also be such that it enables a good electrical bonding of the CDNE, i.e. not painted or anodized.

Documents
Document Sharing Hub
Full document details: CISPR 16-1-2 2014 RLV

Annex A
(normative)

AMNs
~~(clause 4)~~

A.1 General

This annex sets forth information and data concerning AMNs used in the measurement of radio-frequency (RF) voltages over the frequency range 9 kHz to 100 MHz and having current-carrying capabilities of up to 500 A. This annex supplements the provisions of Clause 4. Included are V-networks for voltage measurements between each conductor of the supply mains and reference ground, and delta-networks for voltage measurements between conductors of the supply mains (symmetric) and between the electrical mid-point of the conductors of the supply mains and reference ground (asymmetric).

An AMN circuit ~~has to~~ shall provide firstly the specified impedance over the working frequency range. It ~~has to~~ shall provide sufficient isolation to spurious signals in the mains supply (the spurious signals generally should be at least 10 dB below the measurement level at the measuring receiver). Also it ~~has to~~ shall prevent the mains voltage from being applied to the measuring receiver. It should have these provisions for each conductor of the mains (two-wire in single-phase and four-wire in three-phase), a switch to connect the measuring receiver to the mains conductor under measurement and to provide the correct termination to the other mains conductors. The circuits given in this annex have these features. These circuits are given for the case of two-wire single-phase mains; extension to four-wire three-phase use is simply done.

A.2 An example of the 50 Ω/50 μH + 5 Ω artificial mains V-network

Figure 5 shows a suitable circuit with the component values listed in Table A.1. The parameters L_1, C_1, R_1, R_4 and R_5 define the impedance; L_2, C_2 and R_2 provide the isolation to spurious mains signals and mains impedance variations, and C_3 decouples the measuring receiver from mains voltage. The network may be constructed for use with currents up to 100 A.

Table A.1 – Component values of 50 Ω/50 μH + 5 Ω V-network

Component	Value
R_1	5 Ω
R_2	10 Ω
R_3	1 000 Ω
R_4	50 Ω
R_5	50 Ω (input impedance the measuring receiver)
C_1	8 μF
C_2	4 μF
C_3	0,25 μF
L_1	50 μH
L_2	250 μH

Documents
Document Sharing Hub
Full document details: CISPR 16-1-2 2014 RLV

At the lowest frequencies of the range 9 kHz to 150 kHz, the 0,25 μF capacitance of C_3 does not have a negligible impedance. Unless otherwise specified, it will be necessary to make a correction for this impedance.

Since C_1 and C_2 have high capacitances, for safety reasons the network case should either be solidly bonded to reference ground or a mains isolating transformer should be used.

The inductance L_2 should have a Q-factor not less than 10 over the 9 kHz to 150 kHz frequency range. In practice, it is advantageous to use inductors coupled in series opposition in the live and neutral lines (common-core choke).

A suitable construction for the inductor L_1 is described in Clause A.7. For equipment requiring currents greater than 25 A, difficulties may be encountered in the construction of L_2. In this case the isolating section L_2, C_2 and R_2 may be omitted. The effects will be that the impedance of the network at frequencies below 150 kHz may be outside the tolerance specified in 4.3, and the isolation of mains noise may not be sufficient.

This circuit may also satisfy the requirements of the 50 Ω/50 μH artificial mains V-network specified in 4.4.

A.3 An example of the 50 Ω/50 μH artificial mains V-network

Figure 6 shows the circuit with the component values as listed in Table A.2. Components L_1, C_1, R_2, R_3 and R_4 define the impedance. Unlike the previous example (i.e. see A.2), there is no isolating section because the circuit is able to meet the impedance specification. However, in cases of high ambient mains noise, a filter is required to reduce the spurious signal level. This network may be constructed for use with currents up to 100 A.

Table A.2 – Component values of 50 Ω/50 μH V-network

Component	Value
R_1	1 000 Ω
R_2	50 Ω
R_3	0 Ω
R_4	50 Ω (input impedance of the measuring receiver)
R_5	0 Ω
C_1	1 μF
C_2	0,1 μF
L_1	50 μH

Because C_1 has a high capacitance, for safety reasons the network case shall either be solidly bonded to reference ground or a mains isolating transformer shall be used.

A suitable construction for the inductor L_1 is described in Clause A.7.

A.4 Examples of the 50 Ω/5 μH + 1 Ω artificial mains V-network

The circuit of Figure 6 with the component values given in Table A.3 is suitable for frequencies 150 kHz to 30 MHz, and currents up to 400 A.

Documents
Document Sharing Hub
Full document details: CISPR 16-1-2 2014 RLV

Table A.3 – Component values of 50 Ω/5 μH + 1 Ω V-network

Component	Value
R_1	1 000 Ω
R_2	50 Ω
R_3	0 Ω
R_4	50 Ω (input impedance of the measuring receiver)
R_5	1 Ω
C_1	2 μF (minimum)
C_2	0,1 μF
L_1	5 μH

An alternative circuit with component values is shown in Figure A.1. It is suitable for the frequency range 150 kHz to 100 MHz, and for currents up to 500 A.

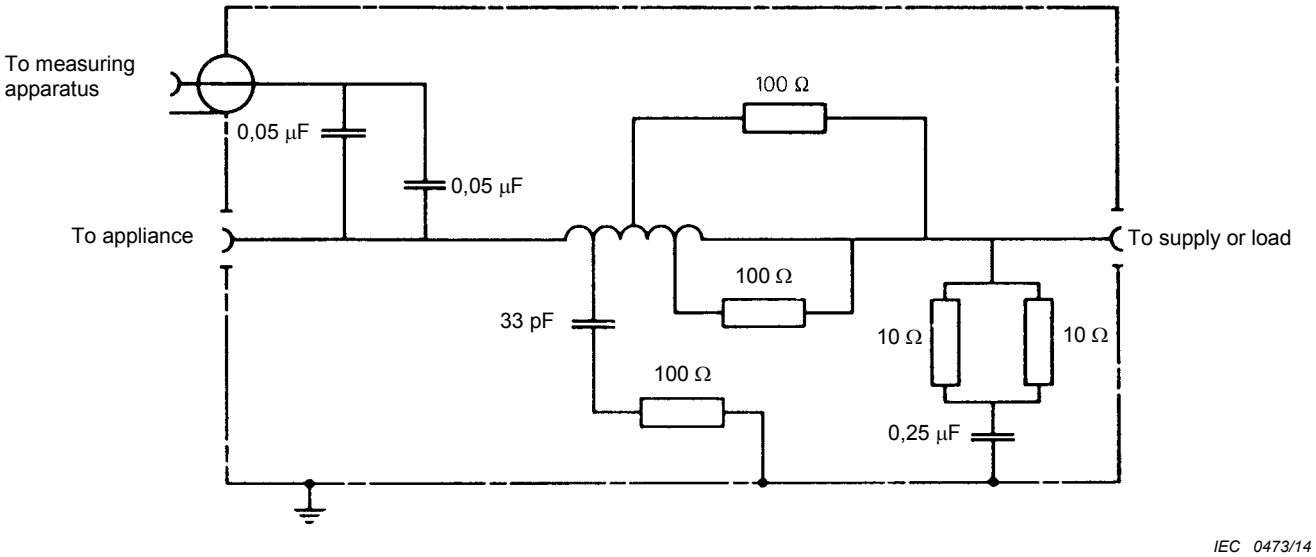

Coil details: 5 μH, 18 turns, ∅ 6 mm wound on 50 mm diameter ~~former~~ coilformer. Tapping points at 3, 5, 9 and 13,5 turns.

Figure A.1 – Example of an alternative 50 Ω/5 μH + 1 Ω V-AMN for devices used with low impedance power sources

A.5 An example of the 150 Ω artificial mains V-network

Figure 6 shows a suitable circuit. The component values are given in Table A.4.

Documents
Document Sharing Hub
Full document details: CISPR 16-1-2 2014 RLV

Table A.4 – Component values of the 150 Ω V-network

Component	Value
R_1	1 000 Ω
R_2	150 Ω
R_3	100 Ω
R_4	50 Ω (input impedance of the measuring receiver)
R_5	0 Ω
C_1	1 µF
C_2	0,1 µF
L_1	Suitable value to achieve the specified impedance

A.6 Example of the 150 Ω artificial mains delta-network

Figure A.2 shows a suitable circuit. The component values are given in Table A.5.

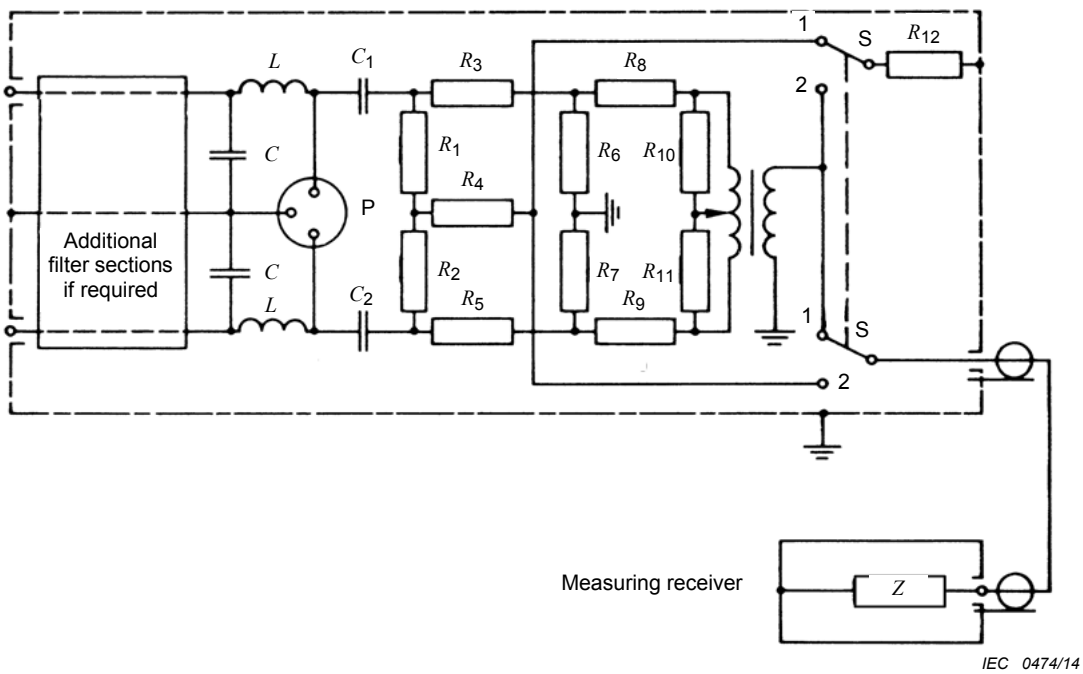

Key

P is the connection for apparatus under test

1 for the symmetric component

2 for the asymmetric component

S double pole double throw switch

Z measuring receiver input impedance

Figure A.2 – Example of a Δ-AMN for a measuring ~~apparatus~~ receiver with unbalanced input

Documents
Document Sharing Hub
Full document details: CISPR 16-1-2 2014 RLV