CISPR 36

Edition 1.0 2020-07

INTERNATIONAL STANDARD

NORME INTERNATIONALE

colour inside

INTERNATIONAL SPECIAL COMMITTEE ON RADIO INTERFERENCE
COMITÉ INTERNATIONAL SPÉCIAL DES PERTURBATIONS RADIOÉLECTRIQUES

Electric and hybrid electric road vehicles – Radio disturbance characteristics – Limits and methods of measurement for the protection of off-board receivers below 30 MHz

Véhicules routiers électriques et hybrides électriques – Caractéristiques de perturbations radioélectriques – Limites et méthodes de mesure pour la protection des récepteurs exterieurs en dessous de 30 MHz

CISPR 36:2020-07(en-fr)

Documents
Document Sharing Hub

Full document details: CISPR 36 2020

THIS PUBLICATION IS COPYRIGHT PROTECTED
Copyright © 2020 IEC, Geneva, Switzerland

All rights reserved. Unless otherwise specified, no part of this publication may be reproduced or utilized in any form or by any means, electronic or mechanical, including photocopying and microfilm, without permission in writing from either IEC or IEC's member National Committee in the country of the requester. If you have any questions about IEC copyright or have an enquiry about obtaining additional rights to this publication, please contact the address below or your local IEC member National Committee for further information.

Droits de reproduction réservés. Sauf indication contraire, aucune partie de cette publication ne peut être reproduite ni utilisée sous quelque forme que ce soit et par aucun procédé, électronique ou mécanique, y compris la photocopie et les microfilms, sans l'accord écrit de l'IEC ou du Comité national de l'IEC du pays du demandeur. Si vous avez des questions sur le copyright de l'IEC ou si vous désirez obtenir des droits supplémentaires sur cette publication, utilisez les coordonnées ci-après ou contactez le Comité national de l'IEC de votre pays de résidence.

IEC Central Office
3, rue de Varembé
CH-1211 Geneva 20
Switzerland

Tel.: +41 22 919 02 11
info@iec.ch
www.iec.ch

About the IEC
The International Electrotechnical Commission (IEC) is the leading global organization that prepares and publishes International Standards for all electrical, electronic and related technologies.

About IEC publications
The technical content of IEC publications is kept under constant review by the IEC. Please make sure that you have the latest edition, a corrigendum or an amendment might have been published.

IEC publications search - webstore.iec.ch/advsearchform
The advanced search enables to find IEC publications by a variety of criteria (reference number, text, technical committee,…). It also gives information on projects, replaced and withdrawn publications.

IEC Just Published - webstore.iec.ch/justpublished
Stay up to date on all new IEC publications. Just Published details all new publications released. Available online and once a month by email.

IEC Customer Service Centre - webstore.iec.ch/csc
If you wish to give us your feedback on this publication or need further assistance, please contact the Customer Service Centre: sales@iec.ch.

Electropedia - www.electropedia.org
The world's leading online dictionary on electrotechnology, containing more than 22 000 terminological entries in English and French, with equivalent terms in 16 additional languages. Also known as the International Electrotechnical Vocabulary (IEV) online.

IEC Glossary - std.iec.ch/glossary
67 000 electrotechnical terminology entries in English and French extracted from the Terms and definitions clause of IEC publications issued between 2002 and 2015. Some entries have been collected from earlier publications of IEC TC 37, 77, 86 and CISPR.

A propos de l'IEC
La Commission Electrotechnique Internationale (IEC) est la première organisation mondiale qui élabore et publie des Normes internationales pour tout ce qui a trait à l'électricité, à l'électronique et aux technologies apparentées.

A propos des publications IEC
Le contenu technique des publications IEC est constamment revu. Veuillez vous assurer que vous possédez l'édition la plus récente, un corrigendum ou amendement peut avoir été publié.

Recherche de publications IEC - webstore.iec.ch/advsearchform
La recherche avancée permet de trouver des publications IEC en utilisant différents critères (numéro de référence, texte, comité d'études,…). Elle donne aussi des informations sur les projets et les publications remplacées ou retirées.

IEC Just Published - webstore.iec.ch/justpublished
Restez informé sur les nouvelles publications IEC. Just Published détaille les nouvelles publications parues. Disponible en ligne et une fois par mois par email.

Service Clients - webstore.iec.ch/csc
Si vous désirez nous donner des commentaires sur cette publication ou si vous avez des questions contactez-nous: sales@iec.ch.

Electropedia - www.electropedia.org
Le premier dictionnaire d'électrotechnologie en ligne au monde, avec plus de 22 000 articles terminologiques en anglais et en français, ainsi que les termes équivalents dans 16 langues additionnelles. Egalement appelé Vocabulaire Electrotechnique International (IEV) en ligne.

Glossaire IEC - std.iec.ch/glossary
67 000 entrées terminologiques électrotechniques, en anglais et en français, extraites des articles Termes et définitions des publications IEC parues entre 2002 et 2015. Plus certaines entrées antérieures extraites des publications des CE 37, 77, 86 et CISPR de l'IEC.

Documents
Document Sharing Hub

Full document details: CISPR 36 2020

CISPR 36

Edition 1.0 2020-07

INTERNATIONAL STANDARD

NORME INTERNATIONALE

colour inside

INTERNATIONAL SPECIAL COMMITTEE ON RADIO INTERFERENCE
COMITÉ INTERNATIONAL SPÉCIAL DES PERTURBATIONS RADIOÉLECTRIQUES

Electric and hybrid electric road vehicles – Radio disturbance characteristics – Limits and methods of measurement for the protection of off-board receivers below 30 MHz

Véhicules routiers électriques et hybrides électriques – Caractéristiques de perturbations radioélectriques – Limites et méthodes de mesure pour la protection des récepteurs exterieurs en dessous de 30 MHz

INTERNATIONAL
ELECTROTECHNICAL
COMMISSION

COMMISSION
ELECTROTECHNIQUE
INTERNATIONALE

ICS 33.100.10; 33.100.20

ISBN 978-2-8322-8655-5

Warning! Make sure that you obtained this publication from an authorized distributor.
Attention! Veuillez vous assurer que vous avez obtenu cette publication via un distributeur agréé.

AVA Documents
Document Sharing Hub

® Registered trademark of the International Electrotechnical Commission
Marque déposée de la Commission Electrotechnique Internationale

Full document details: CISPR 36 2020

CONTENTS

FOREWORD 4
INTRODUCTION 6
1 Scope 7
2 Normative references 7
3 Terms and definitions 8
4 Limits of radiated disturbances 9
4.1 Determination of conformance of vehicle with limits 9
4.2 Quasi-peak detector limits 9
5 Methods of measurement 10
5.1 Measurement instruments 10
5.1.1 Measuring receiver 10
5.1.2 Magnetic field antenna 11
5.1.3 Measurement instrumentation uncertainty 11
5.2 Measuring site requirements 11
5.2.1 Outdoor test site (OTS) requirements 11
5.2.2 Alternative test site requirements 12
5.3 Test setup for measurement antenna 13
5.3.1 General 13
5.3.2 Distance 13
5.3.3 Position 13
5.3.4 Height 15
5.4 Test object conditions 15
5.4.1 General 15
5.4.2 Vehicles 15
Annex A (normative) Measurement instrumentation uncertainty 16
A.1 Overview 16
A.2 Radiated disturbance measurements at an OTS or in an ALSE in the frequency range 150 kHz to 30 MHz 16
A.2.1 General 16
A.2.2 easurand 17
A.2.3 Input quantities to be considered for radiated disturbance measurements 17
Annex B (Informative) Uncertainty budgets for radiated disturbance measurements of magnetic field strength 20
B.1 General 20
B.2 Typical CISPR 36 uncertainty budgets 20
B.3 Receiver's frequency step 21
Annex C (informative) Items under consideration 23
C.1 General 23
C.2 Plug-in charging mode and WPT charging mode 23
C.3 Correlation between OTS, OATS and ALSE measurements 23
C.4 Measurement distance of 10 m 23
Bibliography 24

Figure 1 – Limit of magnetic field disturbance (quasi-peak detector) at 3 m antenna distance 10

AVA Documents
Document Sharing Hub

Full document details: CISPR 36 2020

Figure 2 – Measuring site (OTS) for vehicles 12
Figure 3 – Magnetic field measurement – transverse loop orientation 14
Figure 4 – Magnetic field measurement – radial loop orientation 14
Figure 5 – Magnetic field antenna height – Elevation view (radial loop orientation) 15
Figure A.1 – Sources of measurement instrumentation uncertainty 17
Figure B.1 – Example of measurement for frequency step uncertainty evaluation 22

Table 1 – Limit of disturbance (quasi-peak detector at 3 m antenna distance) 9
Table 2 – Spectrum analyser parameters 11
Table 3 – Scanning receiver parameters 11
Table A.1 – Input quantities to be considered for radiated disturbance measurements 18
Table B.1 – Typical uncertainty budget – 3 m distance – loop antenna 20

Documents
Document Sharing Hub

Full document details: CISPR 36 2020

INTERNATIONAL ELECTROTECHNICAL COMMISSION

INTERNATIONAL SPECIAL COMMITTEE ON RADIO INTERFERENCE

ELECTRIC AND HYBRID ELECTRIC ROAD VEHICLES – RADIO DISTURBANCE CHARACTERISTICS – LIMITS AND METHODS OF MEASUREMENT FOR THE PROTECTION OF OFF-BOARD RECEIVERS BELOW 30 MHz

FOREWORD

1) The International Electrotechnical Commission (IEC) is a worldwide organization for standardization comprising all national electrotechnical committees (IEC National Committees). The object of IEC is to promote international co-operation on all questions concerning standardization in the electrical and electronic fields. To this end and in addition to other activities, IEC publishes International Standards, Technical Specifications, Technical Reports, Publicly Available Specifications (PAS) and Guides (hereafter referred to as "IEC Publication(s)"). Their preparation is entrusted to technical committees; any IEC National Committee interested in the subject dealt with may participate in this preparatory work. International, governmental and non-governmental organizations liaising with the IEC also participate in this preparation. IEC collaborates closely with the International Organization for Standardization (ISO) in accordance with conditions determined by agreement between the two organizations.
2) The formal decisions or agreements of IEC on technical matters express, as nearly as possible, an international consensus of opinion on the relevant subjects since each technical committee has representation from all interested IEC National Committees.
3) IEC Publications have the form of recommendations for international use and are accepted by IEC National Committees in that sense. While all reasonable efforts are made to ensure that the technical content of IEC Publications is accurate, IEC cannot be held responsible for the way in which they are used or for any misinterpretation by any end user.
4) In order to promote international uniformity, IEC National Committees undertake to apply IEC Publications transparently to the maximum extent possible in their national and regional publications. Any divergence between any IEC Publication and the corresponding national or regional publication shall be clearly indicated in the latter.
5) IEC itself does not provide any attestation of conformity. Independent certification bodies provide conformity assessment services and, in some areas, access to IEC marks of conformity. IEC is not responsible for any services carried out by independent certification bodies.
6) All users should ensure that they have the latest edition of this publication.
7) No liability shall attach to IEC or its directors, employees, servants or agents including individual experts and members of its technical committees and IEC National Committees for any personal injury, property damage or other damage of any nature whatsoever, whether direct or indirect, or for costs (including legal fees) and expenses arising out of the publication, use of, or reliance upon, this IEC Publication or any other IEC Publications.
8) Attention is drawn to the Normative references cited in this publication. Use of the referenced publications is indispensable for the correct application of this publication.
9) Attention is drawn to the possibility that some of the elements of this IEC Publication may be the subject of patent rights. IEC shall not be held responsible for identifying any or all such patent rights.

International Standard CISPR 36 has been prepared by CISPR subcommittee D: Electromagnetic disturbances related to electric/electronic equipment on vehicles and internal combustion engine powered devices.

The text of this International Standard is based on the following documents:

CDV	Report on voting
CISPR/D/462/CDV	CISPR/D/464A/RVC

Full information on the voting for the approval of this International Standard can be found in the report on voting indicated in the above table.

This document has been drafted in accordance with the ISO/IEC Directives, Part 2.

AVA Documents
Document Sharing Hub

Full document details: CISPR 36 2020

The committee has decided that the contents of this document will remain unchanged until the stability date indicated on the IEC website under "http://webstore.iec.ch" in the data related to the specific document. At this date, the document will be

- reconfirmed,
- withdrawn,
- replaced by a revised edition, or
- amended.

IMPORTANT – The 'colour inside' logo on the cover page of this publication indicates that it contains colours which are considered to be useful for the correct understanding of its contents. Users should therefore print this document using a colour printer.

Documents
Document Sharing Hub

Full document details: CISPR 36 2020

INTRODUCTION

There is a specific need for documents to define acceptable low frequency performance of all electrical/electronic products. CISPR 36 has been developed to serve the electric and hybrid electric road vehicle and related industries with test methods and limits that provide satisfactory protection for radio reception.

Compliance with this document is sometimes insufficient for the protection of receivers used in the residential environment nearer than 10 m to the vehicle. It also sometimes does not provide sufficient protection for new types of radio transmissions.

Documents
Document Sharing Hub

Full document details: CISPR 36 2020

ELECTRIC AND HYBRID ELECTRIC ROAD VEHICLES – RADIO DISTURBANCE CHARACTERISTICS – LIMITS AND METHODS OF MEASUREMENT FOR THE PROTECTION OF OFF-BOARD RECEIVERS BELOW 30 MHz

1 Scope

This document defines limits for 3 m measurement distance and methods of measurement that are designed to provide protection for off-board receivers (at 10 m distance) in the frequency range of 150 kHz to 30 MHz when used in the residential environment.

NOTE Protection of receivers used on board the same vehicle as the disturbance source(s) is covered by CISPR 25.

This document applies to the emission of electromagnetic energy which might cause interference to radio reception and which is emitted from electric and hybrid electric vehicles propelled by an internal traction battery (see 3.2 and 3.3) when operated on the road.

This document applies to vehicles that have a traction battery voltage between 100 V and 1 000 V.

Electric vehicles to which CISPR 14-1 applies are not in the scope of this document.

This document applies only to road vehicles where an electric propulsion is used for sustained speed of more than 6 km/h.

Vehicles where the electric motor is only used to start up the internal combustion engine (e.g. "micro hybrid") and vehicles where the electric motor is used for additional propulsion only during acceleration (e.g. "48 V mild hybrid vehicles") are not in the scope of this document.

The radiated emission requirements in this document are not applicable to the intentional transmissions from a radio transmitter as defined by the ITU including their spurious emissions.

Annex C lists work being considered for future revisions.

2 Normative references

The following documents are referred to in the text in such a way that some or all of their content constitutes requirements of this document. For dated references, only the edition cited applies. For undated references, the latest edition of the referenced document (including any amendments) applies.

CISPR 16-1-1:2015, *Specification for radio disturbance and immunity measuring apparatus and methods – Part 1-1: Radio disturbance and immunity measuring apparatus – Measuring apparatus*

CISPR 16-1-4:2019, *Specification for radio disturbance and immunity measuring apparatus and methods – Part 1-4: Radio disturbance and immunity measuring apparatus – Antennas and test sites for radiated disturbance measurements*

CISPR 16-2-3:2016, *Specification for radio disturbance and immunity measuring apparatus and methods – Part 2-3: Methods of measurement of disturbances and immunity – Radiated disturbance measurements*
CISPR 16-2-3:2016/AMD1:2019

AVA Documents
Document Sharing Hub

Full document details: CISPR 36 2020

3 Terms and definitions

For the purposes of this document, the following terms and definitions apply.

ISO and IEC maintain terminological databases for use in standardization at the following addresses:

- IEC Electropedia: available at http://www.electropedia.org/
- ISO Online browsing platform: available at http://www.iso.org/obp

3.1
absorber lined shielded enclosure
ALSE
shielded enclosure in which the ceiling and walls are covered with material that absorbs electromagnetic energy (i.e. RF absorber)

3.2
electric vehicle
vehicle propelled exclusively by electric motor(s) powered by on-board traction battery or batteries

Note 1 to entry: Vehicles equipped with an additional power source (e.g. auxiliary combustion engine, fuel cell) used to provide electric power to the electric motor/traction battery only, without contributing to the mechanical propulsion of the vehicle, are considered as electric vehicles for the purposes of this document.

3.3
hybrid electric vehicle
vehicle propelled by electric motor(s) and internal combustion engine

Note 1 to entry: The two propulsion systems can operate individually or in a combined mode depending on the hybrid system.

3.4
open-area test site
OATS
facility for measurements and calibrations in which the ground reflection is made reproducible by a large flat electrically conducting ground plane

Note 1 to entry: An OATS can be used for radiated disturbance measurements, where it is also designated as a COMTS. An OATS can also be used for antenna calibrations, where it is designated as a CALTS.

Note 2 to entry: An OATS is an uncovered outdoor site, and is far enough away from buildings, electric lines, fences, trees, underground cables, pipelines, and other potentially reflective objects, so that the effects due to such objects are negligible. See CISPR 16-1-4 for guidance on the construction of an OATS.

[SOURCE CISPR 16-2-3:2016, 3.1.20]

3.5
outdoor test site
OTS
measurement site similar to an open-area test site as specified in CISPR 16-1-4, but without any type of metallic ground plane and with different dimensions

Note 1 to entry: Specific requirements are defined in this document.

3.6
residential environment
environment having a 10 m protection distance between the source and the point of radio reception

Note 1 to entry: Examples of a residential environment include rooming houses, private dwellings, entertainment halls, theatres, schools, public streets, shopping centres / malls, etc.

AVA Documents
Document Sharing Hub

Full document details: CISPR 36 2020

3.7
traction battery
battery used for the propulsion of electric vehicle or hybrid electric vehicle

3.8
vehicle
machine operating on land which is intended to carry persons or goods

Note 1 to entry: Vehicles include, but are not limited to, cars, trucks, buses and mopeds.

4 Limits of radiated disturbances

4.1 Determination of conformance of vehicle with limits

The vehicle shall comply with the quasi-peak detector magnetic field strength limits specified in 4.2, when it is in "Propulsion" mode of operation, as per 5.4.2.2.

The limits given in this document take into account uncertainties.

4.2 Quasi-peak detector limits

The limit for emissions measured with quasi-peak detector at 3 m antenna distance is given in Table 1 and is shown graphically in Figure 1. It is expressed in dB(µA/m). For more accurate determination, the formula given in Table 1 shall be used.

Table 1 – Limit of disturbance (quasi-peak detector at 3 m antenna distance)

Frequency MHz	***H* field** dB(µA/m)
0,15 to 4	$26{,}11 - 15{,}64 \times \lg(f_{\mathrm{MHz}})$
4 to 15	$33{,}17 - 27{,}35 \times \lg(f_{\mathrm{MHz}})$
15 to 30	$16{,}63 - 13{,}29 \times \lg(f_{\mathrm{MHz}})$

Documents
Document Sharing Hub
Full document details: CISPR 36 2020

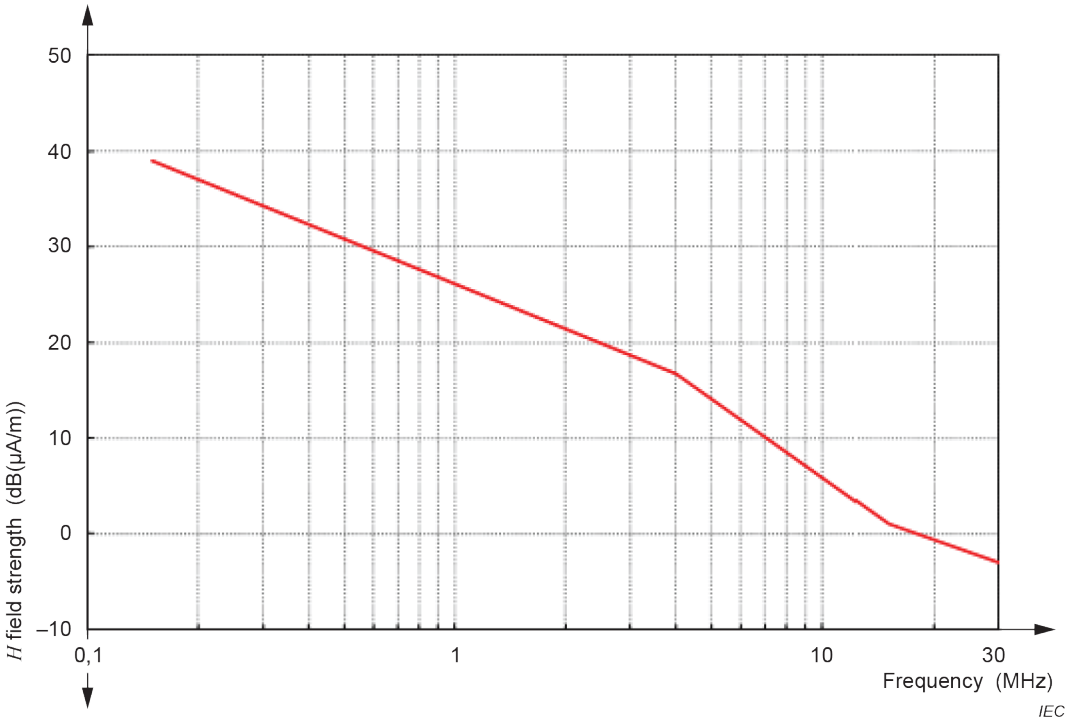

Figure 1 – Limit of magnetic field disturbance (quasi-peak detector) at 3 m antenna distance

5 Methods of measurement

5.1 Measurement instruments

5.1.1 Measuring receiver

5.1.1.1 General

The measuring receiver (including FFT-based measurement instruments) shall comply with the requirements of CISPR 16-1-1:2015. Either manual or automatic frequency scanning may be used.

A preamplifier can be used between the antenna and measuring receiver in order to achieve the 6 dB noise floor requirements (see 5.2.1.2). If a preamplifier is used to achieve the 6 dB noise floor requirement, the laboratory should establish a procedure to avoid overload of the preamplifier, such as using a step attenuator. The laboratory should also ensure the receiver is not overloaded in all measurement scenarios, with or without an external preamplifier.

5.1.1.2 Spectrum analyser parameters

The scan rate of the spectrum analyser shall be adjusted for the CISPR frequency band and detection mode used. The maximum scan rate shall comply with the requirements of CISPR 16-2-3.

Spectrum analysers may be used for performing compliance measurements to this document providing the precautions cited in CISPR 16-1-1:2015 on the use of spectrum analysers are adhered to and that the broadband emissions from the product being tested have a repetition frequency greater than 20 Hz.

The minimum scan time and resolution bandwidth (RBW) are listed in Table 2.

Documents
Document Sharing Hub
Full document details: CISPR 36 2020

Table 2 – Spectrum analyser parameters

Frequency range MHz	Quasi-peak detector	
	RBW at −6 dB	Scan time
0,15 to 30	9 kHz	200 s/MHz

When a spectrum analyser is used for measurements, the video bandwidth shall be at least three times the RBW.

5.1.1.3 Scanning receiver parameters

The measurement time of the scanning receiver shall be adjusted for the CISPR frequency band and detection mode used. The minimum measurement time, maximum step size and bandwidth (BW) are listed in Table 3.

Table 3 – Scanning receiver parameters

Frequency range MHz	Quasi-peak detector		
	BW at −6 dB	Step size	Minimum measurement time
0,15 to 30	9 kHz	5 kHz	1 s

5.1.2 Magnetic field antenna

For measuring the magnetic field, an electrically-screened loop antenna shall be used (see CISPR 16-1-4:2019, 4.4.2).

5.1.3 Measurement instrumentation uncertainty

The measurement instrumentation uncertainty shall be calculated as described in Annex A.

Measurement instrumentation uncertainty shall not be taken into account in the determination of compliance.

Examples of uncertainty budgets are given in Annex B. If the calculated expanded measurement instrumentation uncertainty exceeds that of the corresponding example in Annex B, the value of the expanded uncertainty shall be documented in the test report.

NOTE The provisions for measurement instrumentation uncertainty (MIU) in this document do not follow CISPR 16-4-2 for considering MIU. The deviation from policy is justified due to the missing site validation method which will be covered in a future revision of CISPR 36. An estimation of the uncertainty contribution caused by site imperfections cannot be made without site validation criterion.

5.2 Measuring site requirements

5.2.1 Outdoor test site (OTS) requirements

5.2.1.1 OTS for vehicles

The test site shall be a clear area, free from electromagnetic reflecting surfaces (except the floor) within a circle of minimum radius of 20 m measured from a point midway between the vehicle and the antenna. As an exception, the measuring equipment and test hut or vehicle in which the measuring equipment is located (when used) may be within the test site, but only in the permitted region indicated by the crosshatched area of Figure 2.

AVA Documents
Document Sharing Hub

Full document details: CISPR 36 2020

Dimensions in metres

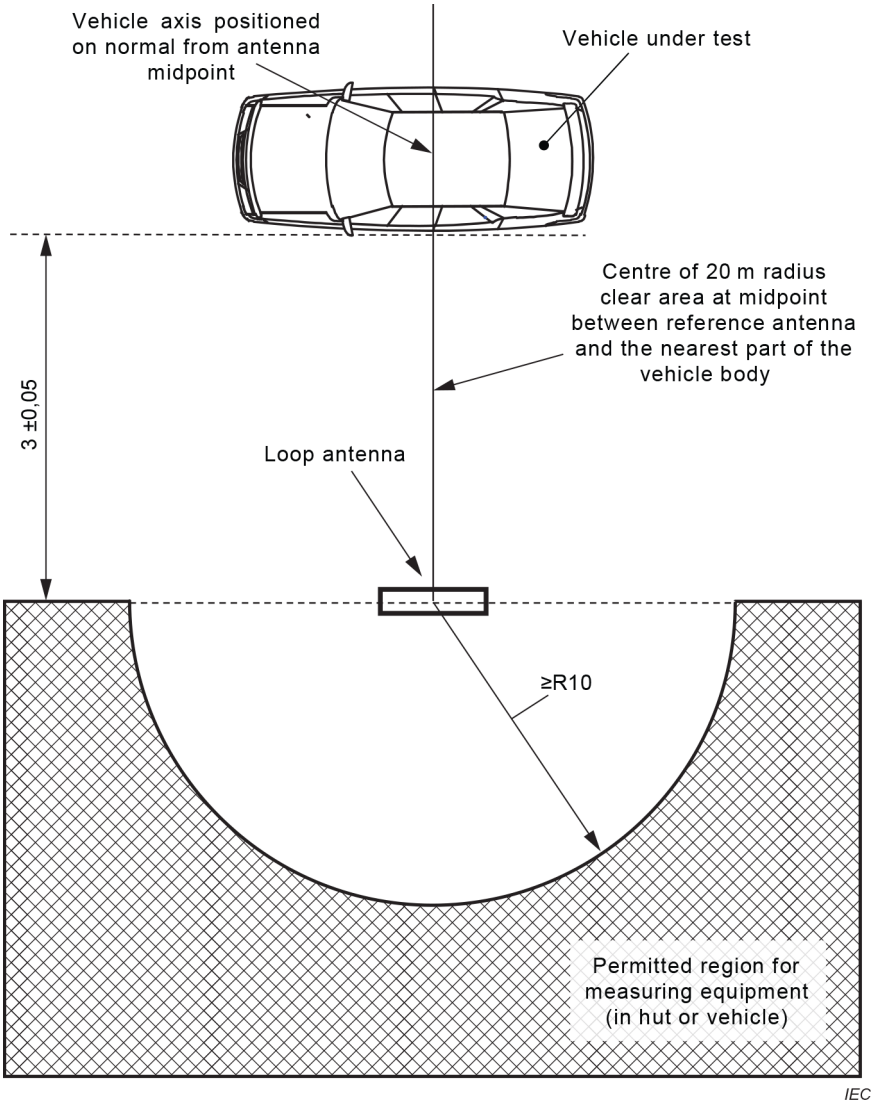

Figure 2 – Measuring site (OTS) for vehicles

5.2.1.2 Ambient magnetic field requirements

To ensure that there is no extraneous noise or signals of sufficient magnitude or density to affect materially the vehicle measurement, ambient measurements shall be taken before and after the main test, but without the vehicle under test running. In both of these measurements, the ambient noise shall be at least 6 dB below the limits of disturbance given in Clause 4, excluding intentional radiators.

5.2.2 Alternative test site requirements

5.2.2.1 General

Absorber lined shielded enclosures (ALSE) and open area test sites (OATS) may be used. An ALSE has the advantage of all-weather testing, a controlled environment and improved repeatability because of the stable chamber electrical characteristics.

NOTE There is ongoing work on an appropriate correlation method (see Annex C)

Documents
Document Sharing Hub
Full document details: CISPR 36 2020

5.2.2.2 Ambient magnetic field requirements

The ambient noise level shall be at least 6 dB below the limits of disturbance given in Clause 4. The ambient level shall be verified periodically or when test results indicate the possibility of non-compliance.

5.3 Test setup for measurement antenna

5.3.1 General

At each measurement frequency (including the start and end frequencies), measurements shall be taken for two loop orientations (H radial and H transverse).

Electrical interaction between the antenna elements and the antenna support/guy system should be avoided.

Sheath current chokes and ferrite (e.g. sheath-current suppressor in CISPR 25:2016, Annex C) should be loaded to the cable to reduce the common mode current (e.g. placing ferrite with a minimum impedance of 50 Ω at 25 MHz on the antenna cable every 200 mm along its entire length within the ALSE).

5.3.2 Distance

The projected horizontal distance along the measurement axis (i.e. along the vehicle body longitudinal axis, for front and rear antenna positions, and along the vehicle body transversal axis, for left and right antenna locations) between the centre of the loop antenna and the nearest part of the vehicle body shall be 3,00 m ± 0,05 m for all antenna positions.

5.3.3 Position

Four antenna positions are required. The same positions shall be used for both loop orientations measurements (see Figure 3 and Figure 4):

– front of the vehicle with the centre of the loop aligned with the vehicle body longitudinal axis;
– rear of the vehicle with the centre of the loop aligned with the vehicle body longitudinal axis;
– left of the vehicle with the centre of the loop aligned with the vehicle body transversal axis;
– right of the vehicle with the centre of the loop aligned with the vehicle body transversal axis.

If the measurements are performed in an ALSE, the minimum distance between any portion of the loop antenna and the absorber material shall be 1 m.

Documents
Document Sharing Hub
Full document details: CISPR 36 2020

Dimensions in metres

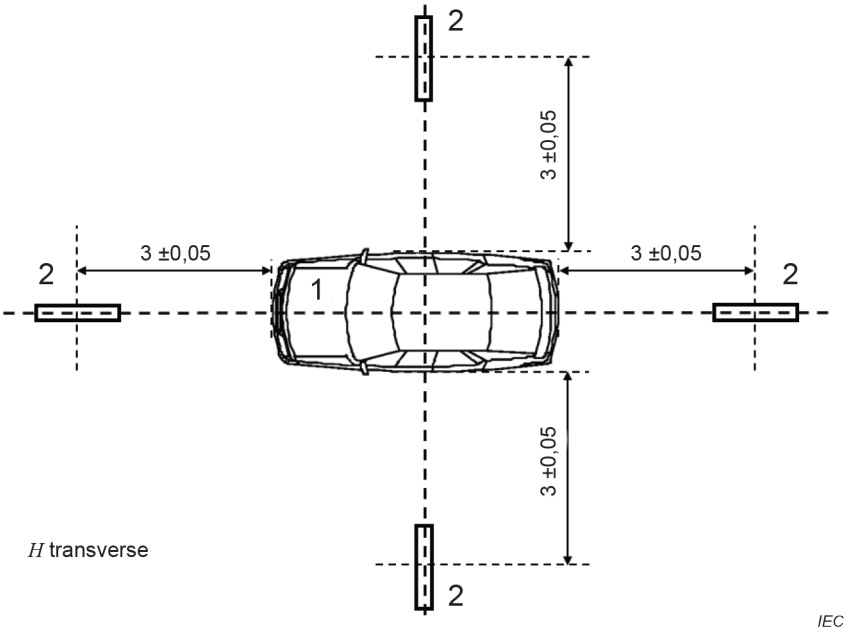

Key

1 vehicle under test

2 antenna (four positions)

Figure 3 – Magnetic field measurement – transverse loop orientation

Dimensions in metres

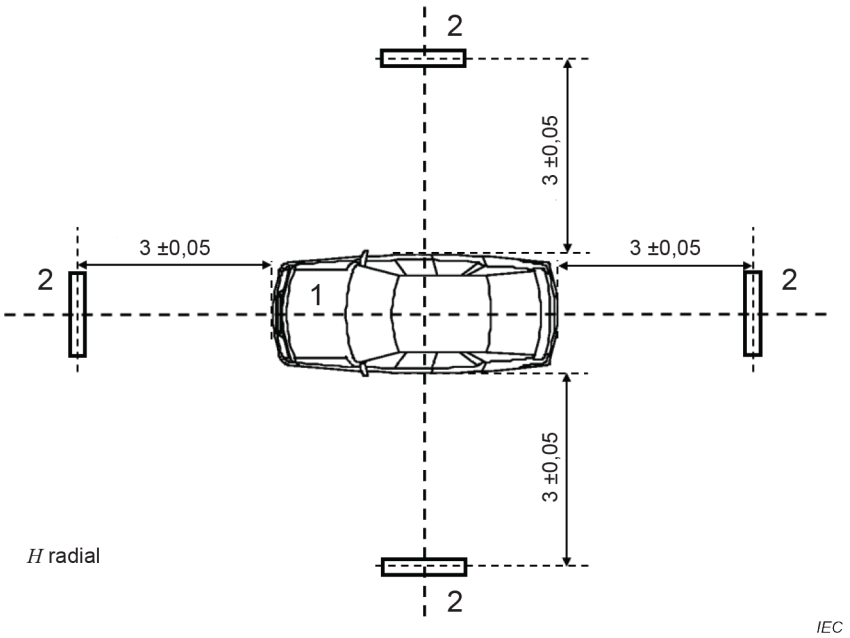

Key

1 vehicle under test

2 antenna (four positions)

Figure 4 – Magnetic field measurement – radial loop orientation

Documents
Document Sharing Hub
Full document details: CISPR 36 2020