According to law Danieli&C. considers this document to be a company secret and therefore prohibits any person to reproduce it or make it known in whole or in part to other parties or to competitors without specific written authorization of Danieli's Management

DANIELI

ROTAIE

RAILS

STANDARD N°	5.400.001		
REV. 00	PAGINA / PAGE 1	DI / OF 4	
SOSTITUISCE / REPLACES	5.300.041		

REV.	DATA / DATE	DESCRIZIONE MODIFICA / DESCRIPTION OF MODIFICATION	REDATTO / COMPILED	CONTROLLATO / CHECKED	APPROVATO / APPROVED
00	01/97	Prima emissione First issue	Zorzut DTN	Mazzolo DMH	Dalla Franc. UGQ

Pag. 1 2 3 4

A termini di legge la **DANIELI & C. S.p.A.** considera questo documento come segreto aziendale con **divieto per chiunque** di riprodurlo e/o di renderlo comunque noto, in tutto o in parte, a terzi, ovvero a ditte concorrenti, senza specifica autorizzazione scritta della **Direzione DANIELI.**

Documents Document Sharing Hub

Full document details: DANIELI 5.400.001 0

According to law Danieli&C. considers this document to be a company secret and therefore prohibits any person to reproduce it or make it known in whole or in part to other parties or to competitors without specific written authorization of Danieli's Management

ROTAIE PER LINEE FERROVIARIE UNI 3141
RAILS FOR RAILROADS UNI 3141

ROTAIA TIPO 36
RAIL TYPE 36

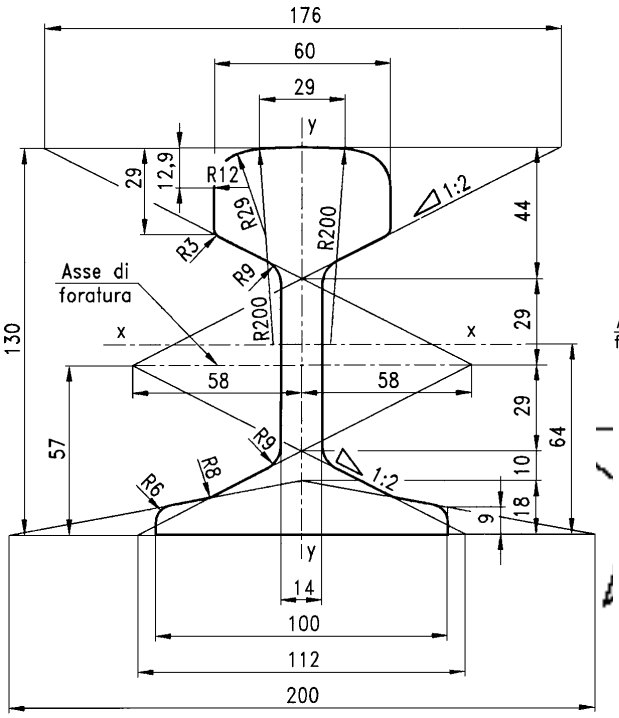

ROTAIA TIPO 46
RAIL TYPE 46

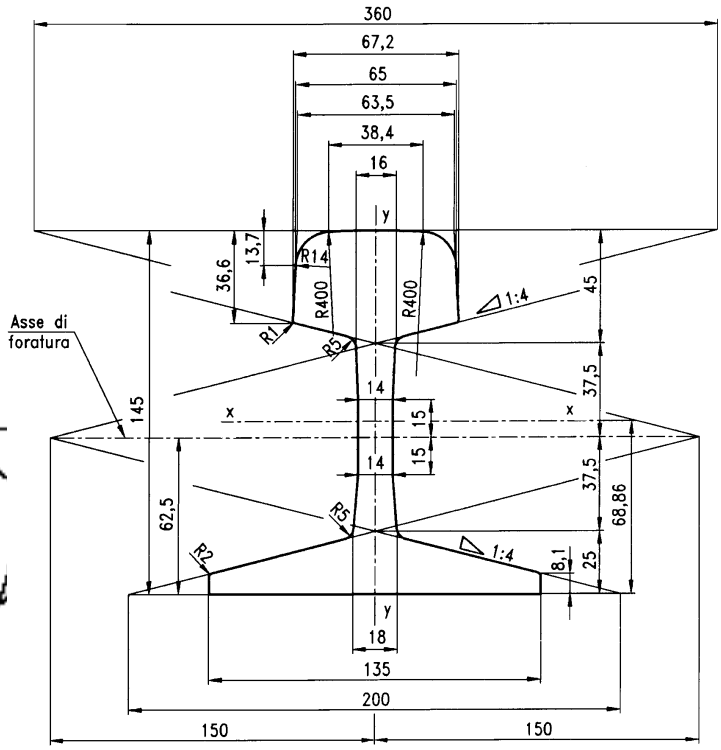

ROTAIA TIPO 50
RAIL TYPE 50

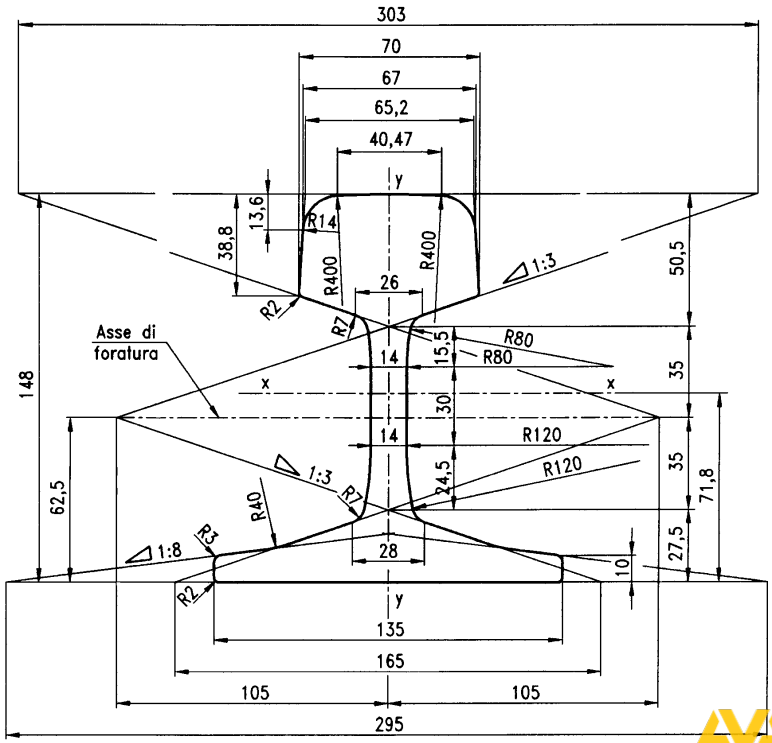

Documents
Document Sharing Hub

Full document details: DANIELI 5.400.001 0