DRAFT FOR DEVELOPMENT

DD ISO/TS 5658-1:2006

Reaction to fire tests — Spread of flame —

Part 1: Guidance on flame spread

ICS 13.220.50

NO COPYING WITHOUT BSI PERMISSION EXCEPT AS PERMITTED BY COPYRIGHT LAW

BSI Documents
Document Sharing Hub
British Standards

Full document details: DD ISO/TS 5658-1:2006

National foreword

This Draft for Development was published by BSI. It is the UK implementation of ISO/TS 5658-1:2006. It supersedes BS ISO/TR 5658-1:1997 which is withdrawn.

This publication is not to be regarded as a British Standard.

It is being issued in the Draft for Development series of publications and is of a provisional nature. It should be applied on this provisional basis, so that information and experience of its practical application can be obtained.

Comments arising from the use of this Draft for Development are requested so that UK experience can be reported to the international organization responsible for its conversion to an international standard. A review of this publication will be initiated not later than 3 years after its publication by the international organization so that a decision can be taken on its status. Notification of the start of the review period will be made in an announcement in the appropriate issue of *Update Standards*.

According to the replies received by the end of the review period, the responsible BSI Committee will decide whether to support the conversion into an international Standard, to extend the life of the Technical Specification or to withdraw it. Comments should be sent to the Secretary of the responsible BSI Technical Committee at British Standards House, 389 Chiswick High Road, London W4 4AL.

The UK participation in its preparation was entrusted to Technical Committee FSH/21, Reaction to fire tests.

A list of organizations represented on this committee can be obtained on request to its secretary.

This publication does not purport to include all the necessary provisions of a contract. Users are responsible for its correct application.

This Draft for Development was published under the authority of the Standards Policy and Strategy Committee on 31 May 2007

© BSI 2007

ISBN 978 0 580 50735 9

Amendments issued since publication

Amd. No.	Date	Comments

Documents
Document Sharing Hub

Full document details: DD ISO/TS 5658-1:2006

TECHNICAL SPECIFICATION

ISO/TS 5658-1

First edition
2006-10-01

Reaction to fire tests — Spread of flame —

Part 1: Guidance on flame spread

Essais de réaction au feu — Propagation du feu —

Partie 1: Lignes directrices sur la propagation de la flamme

Reference number
ISO/TS 5658-1:2006(E)

Documents
Document Sharing Hub

Full document details: DD ISO/TS 5658-1:2006

Documents
Document Sharing Hub

Full document details: DD ISO/TS 5658-1:2006

Contents

Page

Foreword ... iv
Introduction ... v
1 Scope ... 1
2 Principles of flame spread ... 1
3 Characteristics of flame-spread modes ... 2
3.1 General ... 2
3.2 Horizontal, facing upward ... 3
3.3 Vertical or inclined ... 4
3.4 Horizontal, facing downward ... 6
4 History of surface spread of flame tests ... 7
5 Small-scale tests ... 9
5.1 Method given in ISO 5658-2 ... 9
5.2 LIFT method ... 10
5.3 Method given in ISO 9239-1 ... 10
5.4 Method given in ISO 9239-2 ... 12
6 Intermediate-scale tests ... 12
6.1 Corner tests ... 12
6.2 Method given in ISO 5658-4 ... 12
6.3 Method given in ISO/TR 14696:1999 ... 13
7 Large-scale tests ... 14
7.1 Room corner test (ISO 9705) ... 14
7.2 Room/corridor scenarios ... 17
7.3 Façade scenarios ... 20
7.4 Large-scale vertical flame-spread tests ... 20
8 Flame spread within assemblies ... 22
9 Flame spread by flaming droplets/particles ... 24
9.1 Description of flame spread process with flaming droplets/particles ... 24
9.2 Test methods to characterise flaming droplets/ particles ... 24
9.3 Typical fire scenarios involving flaming droplets/ particles ... 25
Bibliography ... 26

Documents
Document Sharing Hub
Full document details: DD ISO/TS 5658-1:2006

Foreword

ISO (the International Organization for Standardization) is a worldwide federation of national standards bodies (ISO member bodies). The work of preparing International Standards is normally carried out through ISO technical committees. Each member body interested in a subject for which a technical committee has been established has the right to be represented on that committee. International organizations, governmental and non-governmental, in liaison with ISO, also take part in the work. ISO collaborates closely with the International Electrotechnical Commission (IEC) on all matters of electrotechnical standardization.

International Standards are drafted in accordance with the rules given in the ISO/IEC Directives, Part 2.

The main task of technical committees is to prepare International Standards. Draft International Standards adopted by the technical committees are circulated to the member bodies for voting. Publication as an International Standard requires approval by at least 75 % of the member bodies casting a vote.

In other circumstances, particularly when there is an urgent market requirement for such documents, a technical committee may decide to publish other types of normative document:

— an ISO Publicly Available Specification (ISO/PAS) represents an agreement between technical experts in an ISO working group and is accepted for publication if it is approved by more than 50 % of the members of the parent committee casting a vote;

— an ISO Technical Specification (ISO/TS) represents an agreement between the members of a technical committee and is accepted for publication if it is approved by 2/3 of the members of the committee casting a vote.

An ISO/PAS or ISO/TS is reviewed after three years in order to decide whether it will be confirmed for a further three years, revised to become an International Standard, or withdrawn. If the ISO/PAS or ISO/TS is confirmed, it is reviewed again after a further three years, at which time it must either be transformed into an International Standard or be withdrawn.

Attention is drawn to the possibility that some of the elements of this document may be the subject of patent rights. ISO shall not be held responsible for identifying any or all such patent rights.

ISO/TS 5658-1 was prepared by Technical Committee ISO/TC 92, *Fire safety*, Subcommittee SC 1, *Fire initiation and growth*.

This first edition of ISO/TS 5658-1 cancels and replaces ISO/TR 5658-1:1997, which has been technically revised.

ISO 5658 consists of the following parts, under the general title *Reaction to fire tests — Spread of flames*:

— *Part 1: Guidance on flame spread* (Technical Specification)

— *Part 2: Lateral spread on building and transport products in vertical configuration*

— *Part 4: Intermediate-scale test of vertical spread of flame with vertically oriented specimens*

Documents
Document Sharing Hub
Full document details: DD ISO/TS 5658-1:2006

Introduction

The rate and extent of flame spread are important properties to be characterized when evaluating the reaction to fire hazards of products that can be used in diverse applications such as in buildings, transport, furniture, electrical enclosures, etc. Historically, there have been many approaches taken to the measurement of flame spread and most of these have evolved with little fundamental justification. This Technical Specification describes different modes of flame spread and proposes some theoretical principles to assist with the relevant application of the data obtained from flame spread tests.

This guidance document is about flame spread and as such it fits within the scope of ISO/TC 92/SC 1. Flames are a major cause of fires being initiated (usually described as ignitability) and fire growth (usually physically observed as flames spreading from the initial seat of the fire where the ignition source was applied). Also, within the scope of ISO/TC 92/SC 1, it is generally assumed that fire growth applies up to the point of a developed fire after which the fire can spread (for example) from one compartment to another. This concept is usually covered by the scope of ISO/TC 92/SC 2 (fire containment).

Many flame-spread tests measure the rate and extent of the flame front as the flame moves over the surface of a large area, flat products such as linings on walls, ceilings and floors. Usually the orientation of the test specimen is related to the end-use application (for example, exposed face upwards for floor-coverings). This requirement for end-use relevance is satisfied by ISO 5658-2 and ISO 5658-4 when wall linings are evaluated.

Flame spread over construction and transport products is related to the fire scenario. ISO/TC 92/SC 1 have initially concentrated on the development of tests to simulate flame spread in rooms and along corridors. Other important scenarios where flame spread data are required are façades (both front and behind), shafts, stairs and roofs; much of the theoretical guidance given in this Technical Specification can be applied to these scenarios even though ISO test procedures might not be available as of the date of publication of this Technical Specification.

Flame spread can also occur over non-planar products (e.g. pipes) and within assemblies (e.g. along joints or inside air-gaps). Whilst this Technical Specification concentrates on the theory pertinent to flat products, some of the theory outlined can be applied to improve the understanding of these more complex situations.

The results of small-scale flame-spread tests (e.g. ISO 5658-2 [1] and ISO 9239-1 [2]) and large-scale tests (e.g. ISO 9705 [3]) can be used as components in a total hazard analysis of a specified fire scenario. The theoretical basis of these tests is explained so that relevant conclusions or derivations can be made from the test results.

Documents
Document Sharing Hub

Full document details: DD ISO/TS 5658-1:2006

blank

Documents
Document Sharing Hub

Full document details: DD ISO/TS 5658-1:2006

Reaction to fire tests — Spread of flame —

Part 1:
Guidance on flame spread

1 Scope

This Technical Specification provides guidance on flame spread tests. It describes the principles of flame spread and classifies different flame-spread mechanisms.

2 Principles of flame spread

Flame-spread tests are designed to quantify the flaming process outside of the zone heated by the ignition source (flaming, radiant or overheating) and as such, they help our understanding of how fire grows away from the initial seat of the fire. This concept is relevant to flame spread within the compartment or cavity where the fire originates (that is, the point/area of fire initiation/ignition). Flame-spread tests differ considerably in the conditions that are specified for characterization of the flame-spread process. These conditions include the following:

— intensity and area of thermal attack of ignition source;

— orientation of test specimen (for example, vertical, horizontal and inclined are normally defined);

— ventilation in the vicinity of the test specimen;

— mode of flame spread (see Table 1).

Flammability of surfaces is a major concern of many regulations. The primary room surfaces in buildings, for example, are any combustible linings used on the walls or ceilings, along with floor coverings. Similar flame-spread effects can also occur over the surfaces of transport vehicles (such as ships, trains, aircraft and buses). To understand the role of bench-scale tests in assessing this hazard, the dominant fire effects shall be placed in context.

The ceiling can show a very rapid fire spread and a high contribution to hazard. The least combustible materials should generally be positioned on the ceiling in order to minimize fire hazard. There is not universal agreement on this point and some studies [4] conclude the opposite. For almost any fire scenario, flame spread along the ceiling is wind-aided, which means that the air-flow and the flame spread are both in the same direction.

For common fire scenarios, flame spread on walls is upward (wind-aided) in the vicinity of the fire source. In other parts of the walls, the flame spread is downward (opposed-flow), since entrained air is moving upwards, opposite to the direction of flame motion. Much of the wall can, however, be directly ignited by submersion into the layer of hot gases forming below the ceiling. This ignition does not involve a flame-spread process at all, but ceiling flammability directly accelerates it.

Generally, flame spread on floors within a room is very limited until later stages of a fire. Flame spread on floors in corridors, however, can be of major concern. This flame spread is usually caused by a room fire impinging on the adjacent corridor and igniting the flooring. There is usually some prevailing air-flow direction

Documents
Document Sharing Hub

Full document details: DD ISO/TS 5658-1:2006

within a corridor. Flame spread can then proceed either in the wind-aided direction, or as opposed flow. Commonly, flame spread in both directions can occur simultaneously on corridor flooring materials.

In principle, two different bench-scale test methods would be required to represent the two fundamentally different flame-spread processes of wind-aided spread and opposed-flow spread. The flame spread rates are not similar in these two processes. Wind-aided spread tends to be much more rapid, since a large amount of virgin combustible can be the flame tip, whereas in the opposite direction, the heating of the material is limited to a very small heating zone. Research studies have shown, however, that a test solely dedicated to examining wind-aided spread is not necessary [5].

Theory and experiments both reveal that wind-aided flame spread can often be directly predicted once the heat release rate and the ignitability behaviour of the specimen is established. These would be done in bench-scale by the use of the ISO 5660 method for heat release rate and either ISO 5660-1 [6] or ISO 5657 [7] for ignitability.

Flame spread for the opposed-flow configuration also requires information about the flame flux and the flame heating distance for that geometry [8]. In the context of ISO bench-scale test methods, this is the role for the tests described in this part of ISO 5658 and in ISO 5658-2. Thus, while there are two flame-spread modes of concern and while the wind-aided spread is often of dominant concern, there is a need only for two bench-scale flame-spread ISO tests (ISO 5658-2 and ISO 9239-1). These tests are devoted solely to the opposed-flow mode.

3 Characteristics of flame-spread modes

3.1 General

The characteristics of different flame-spread modes are described and summarized in Table 1. For each of the modes, the dominant heat-transfer mechanisms are identified. The various modes are distinguished by two criteria: orientation of the fuel surface and direction of the main flow of gases relative to that of flame spread. Only flat fuel surfaces are considered. It is assumed that the fuel slab is located in a normal gravity environment, i.e. special cases such as flame spread under microgravity conditions (spaceships) are not considered. The analysis is for thick fuels, or else thin fuels in combination with a backing board. Cases where burning can be on two sides simultaneously (e.g. upward flame spread over curtains) are not explicitly included as a specific flame-spread mode. In addition, discontinuous flame spread caused by separation of flaming parts from the pyrolyzing region of a fuel slab is not included in this clause. This effect can occur with some products in modes B.a, B.b, B.c and C.a. Flame spread from flaming droplets/particles is further described in Clause 9.

Table 1 — Modes of flame spread

Mode reference	Application	Type of flame spread
A.a	Flooring; Horizontal	Opposed-flow
A.b	Flooring; Horizontal	Opposed-flow
A.c	Flooring; Horizontal	Wind-aided
B.a	Walls; Vertical	Wind-aided
B.b	Walls; Vertical	Opposed-flow
B.c	Walls; Vertical	Opposed-flow
C.a	Ceilings; Horizontal	Wind-aided

Documents
Document Sharing Hub
Full document details: DD ISO/TS 5658-1:2006

3.2 Horizontal, facing upward

a) Mode A.a. Flame spread over a horizontal surface away from a burning area is illustrated in Figure 1. The burning area has the characteristics of a pool fire. The flow rate of air entrained into the flame is assumed to be reasonably uniform around the perimeter of the fire. Flame spread is against the direction of the entrained air flow and is, therefore, of the opposed-flow type. The heat transfer to the non-burning fuel is primarily flame radiation. Gas-phase conduction between the flame foot and the virgin fuel is the dominant mode of heat transfer; it occurs only locally, close to the pyrolysis front. If the flow rate of air entrainment is not uniform around the perimeter, the flame tilts in the direction of the dominant flow. As a result, the relationship of the far field flame radiation to the unburnt fuel is no longer symmetrical. Objects blocking the flow and ventilation openings providing fresh air can have a pronounced effect on the flow field close to the fire.

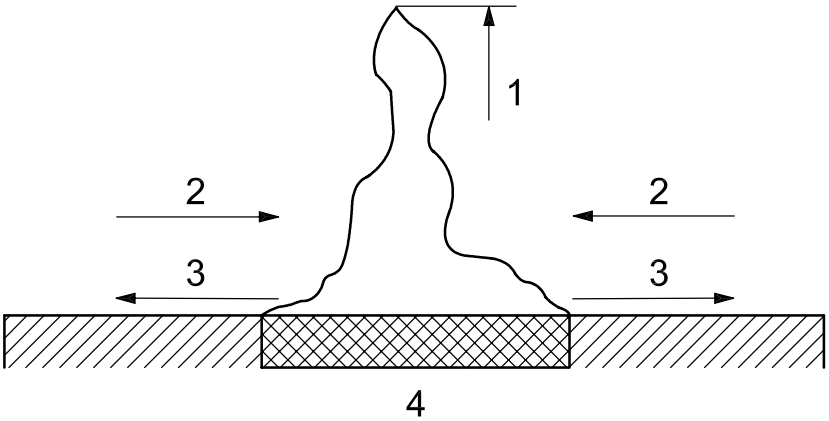

Key

1 flame height
2 air flow
3 spread (mode A.a)
4 pyrolyzing region

NOTE See 3.2 a).

Figure 1 — Flame spread, mode A.a

b) Mode A.b is identical to A.a in 3.2 a), except that there is now a forced air flow that tilts the flame over in the direction of the flow. This is illustrated in Figure 2. On the upstream side of the pool fire, flames spread against the air flow. However, the view factor between the flame and the non-burning fuel on this side is now very small. Consequently, the far field flame radiation becomes negligible and the gas-phase conduction near the pyrolysis front is the only dominant method of heat transfer. In fact, significant flame heating is over only a very small region near the pyrolysis front (a few millimetres). Therefore, the spread rate is very slow and opposed-flow flame spread is commonly referred to as creeping spread.

c) Mode A.c is illustrated at the downstream side of the flame in Figure 2. Flames cover the fuel area between the pyrolysis front and the flame tip. The heat transfer to this area is primarily by flame radiation and convection. This is a typical example of wind-aided flame spread. There is still gas-phase heat conduction near the pyrolysis front, but this mechanism is rather insignificant. Due to the increased view factor, flame radiation in the region between the pyrolysis front and the flame tip is much greater than in mode A.a, at least when flames are luminous.

AVA Documents
Document Sharing Hub

Full document details: DD ISO/TS 5658-1:2006

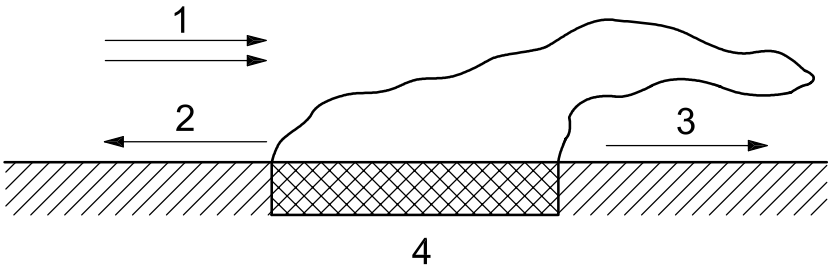

Key

1 air flow

2 spread (mode A.b)

3 spread (mode A.c)

4 pyrolyzing region

NOTE See 3.2 b) and 3.2 c).

Figure 2 — Flame-spread modes A.b and A.c

3.3 Vertical or inclined

a) Mode B.a. Perhaps the most important flame-spread mechanism is that of upward spread over vertical surfaces. This mode, B.a, is illustrated in Figure 3 and is very similar to that of mode A.c. The main difference is that flames cover part of the non-burning fuel ahead of the pyrolysis front due to buoyancy. Wind-aided spread is important because it is by far the fastest flame-spread mechanism. Consequently, many bench- and intermediate-scale tests used for regulatory purposes evaluate the wind-aided flame-spread potential of a material as a measure of its hazard in fire, for example the ASTM E84 Tunnel Test [9] and the DIN 4102 [10] test.

b) Mode B.b. Downward spread from a wall flame, is also shown in Figure 3. It is a form of opposed flow or creeping spread analogous to mode A.b.

c) Mode B.c. Lateral spread, is illustrated in Figure 4. Heat transfer to the non-burning fuel is primarily through gas-phase conduction near the pyrolysis front. Consequently, this mode is similar to that of A.b and B.b.

d) The important flame-spread mechanisms over an inclined plane are dependent upon the angle of inclination of a surface and the extent of the pyrolyzing region in relation to the width of the combustible surface. For surfaces inclined at angles in excess of around 30°, flame spread can be represented as illustrated in Figure 5. The flames from the burning fuel are in contact with the fuel surface ahead of the pyrolyzing region, producing substantial radiative and convective heat transfer to the fuel. The substantial flame lean is due to the fluid dynamics of the air entrainment process and results in a mode of flame spread similar to that of upward spread over vertical surfaces, as shown in Figure 3. This flame-spread process is evaluated in the NT Fire 007 test [11]. This effect is also described in 7.2.5 in relation to sloping corridors. For angles of inclination up to 30°, the modes of flame spread are represented by combinations of Figures 1 (mode A.a) and 2 (mode A.c).

Documents
Document Sharing Hub
Full document details: DD ISO/TS 5658-1:2006